**MILL-MAX MFG. CORP.**

**190 Pine Hollow Road**
**Oyster Bay, NY 11771**
**www.mill-max.com**

Mill-Max Mfg. Corp. is a vertically integrated engineering and manufacturing company capable of producing over 100 million interconnect components a week, making us the largest manufacturer of precision-machined interconnect components in North America.

Established in 1971 by Roger Bahnik, Chairman and CEO, Mill-Max has a tradition of exercising total control from raw materials to finished product. Our 150,000 square foot plant, located in Oyster Bay, NY, houses all facilities including: engineering, customer service, sales & marketing, tooling, primary and secondary machining, stamping, gold and tin plating, injection molding, automatic assembly operations and strict process control, monitored by our experienced Quality Control Inspectors.

Mill-Max is particularly distinguished by its use of proprietary high speed turning machines. On our factory floor, hundreds of automated machines turn copper alloy rod and wire at high speed as cutting tools shape each pin. This method enables us to hold tolerances down to +/-.0005 inches. High-speed turning machines have the flexibility to be easily and quickly re-configured to make pins in different sizes and shapes. This makes the task of producing custom products simple.

In this Design Guide, you will find a wide variety of interconnect components. Our product line includes precision-machined spring-loaded connectors, SIP, DIP, PGA, BGA, and PLCC sockets, board-to-board interconnects and pin headers, PCB pins, receptacles and solder terminals, all available in SMT and through-hole. Cannot find what you need? Remember, Mill-Max specializes in application specific products. Contact one of our technical services engineers to discuss your specific requirements.

Mill-Max products are found in such diversified markets as:

- Automotive
- Backplanes
- Broadcasting Equipment
- Bar Code Scanners
- Cable Television
- Cellular Phones
- Computers
- Connectors
- DC/DC Converters
- Fiber Optics
- Industrial Controls
- Instrumentation
- Medical Cables
- Networking Systems
- Pagers
- Power Supplies
- Scanners
- Smoke Detectors
- Test Equipment
- Telecommunications

From order entry to shipping product, Mill-Max is focused on the total satisfaction of our customers. Through our sales representative organizations, Mill-Max products are sold directly, as well as through a network of 26 authorized distributors located throughout the United States and in various locations worldwide. It's this commitment to excellence that truly makes Mill-Max your source for Maximum Interconnect Solutions.

**NOTE**
- All dimensions in this design guide are in inches unless otherwise stated.

- In the interest of improved design and performance, Mill-Max reserves the right to make changes in its specifications without prior notice.
- Orders subject to terms and conditions @ www.mill-max.com

## Spring-Loaded Connectors — PAGES 6 - 17



## DIP Sockets, Carriers & Headers — PAGES 18 - 64

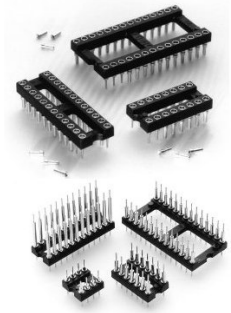



## SIP Interconnects, Sockets, Carriers & Headers — PAGES 65 - 111



## PGA, BGA, PLCC, Sockets & Headers — PAGES 112 - 120

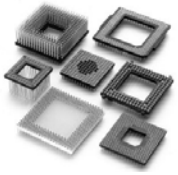



## USB, Test Point, TO Sockets and Jumpers — PAGES 121 - 125

## PIN RECEPTACLES



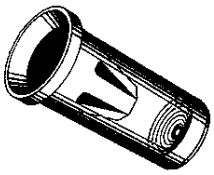

Pin receptacles are individual component lead sockets primarily used for the plugging and unplugging of components on pc boards. Pin receptacles are made by press-fitting a pre-tooled “multi-finger” contact into a precision-machined shell. These receptacles will accept round pins ranging in diameter from .008” to .102”, as well as square & rectangular component leads.

## WRAPOST RECEPTACLES



Wrapost receptacles are individual component lead sockets with .025” or .045” square pin termination for wire wrapped interconnection. Wrapost receptacles will accept round pins ranging in diameter from .015” to .047”, as well as square & rectangular component leads.

## PRINTED CIRCUIT PINS



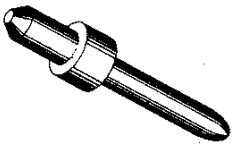

Printed circuit pins are machined, individual pins used for various plug-in applications and board to board interconnection. They are commonly fastened to pc boards by being press-fit, swaged (riveted) or soldered.

## WRAPOST TERMINALS



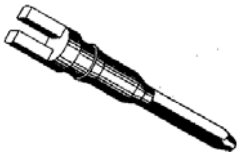

Wrapost terminals are individual pins with .025” or .045” square termination for wire wrapped interconnection. They are commonly fastened to pc boards by being press-fit, swaged (riveted) or soldered.

## SOLDER TERMINALS



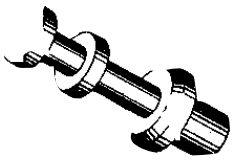

Solder terminals are machined terminals used primarily for attaching wires to circuit boards. Turret, slotted and pin types are available. They are commonly swaged (riveted) and soldered to pc boards.

## Pins & Receptacles:

Pins and receptacle shells are manufactured by precision high speed turning machines. The base materials for these components are copper alloys.

Receptacles are a two piece construction consisting of a plated contact press-fit into a plated shell. The contacts are stamped from beryllium copper strip.

## Materials:

**Pins & Receptacle Shells:**
**Brass Alloy** 360 UNS C36000 ASTM-B16 (Up to a .250" diameter)
**Phosphor Bronze** alloy 544 UNS C54400 ASTM-B139 (Up to a .072" diameter)
**Tellurium Copper** alloy 145 UNS C14500 ASTM-B301 (Up to a .156" diameters)

See page 126 for a complete list of standard available stock diameters.
(For the availability of larger diameter materials contact Technical Services).

**Contacts:**
**Beryllium copper** UNS C17200 ASTM-B194 (For most applications)
**Beryllium Nickel** UNS N03360 (For high temperature applications)

(For individual contact specifications see pages 216-226)
The materials listed above are all RoHS compliant.

## Dimensional, Mechanical & Environmental Data:

**Standard tolerances for pins and receptacle shells are:**
Diameters +/- .002"
Lengths +/- .005"
Angles +/- 2°

**Mechanical Life (Durability):** Mill-Max receptacles are capable of 1000 minimum insertion/extraction cycles for a broad range of applications. Mating pin size, shape and finish along with application specific variables will affect the life of a contact.

**Contact Forces:** See individual contact specifications on pages 216-226.

**Environmental Data:**
- Operating temperature range: -55/+125° C
- Vibration (No electrical discontinuity Greater than 1 µs): 10-2000 HZ, 15 G
- Shock (No electrical discontinuity Greater than 1 µs): 50 G

Electrical data is dependent on the contact used in the receptacle. See page 214 for free air current ratings of the contacts.

## Platings:

GOLD per ASTM B 488 & MIL-G-45204, Type 1, Code C
SILVER per ASTM B 700, Grade B, Class S
TIN per ASTM B 545, Type 1
TIN/LEAD (93/7) per ASTM B 545
ELECTRO-SOLDER (60/40) per ASTM B 579, Bright
NICKEL per SAE-AMS-QQ-N-290
ELECTROLESS NICKEL per MIL-C-26074
COPPER per SAE-AMS-2418

## Connectors:

Connectors are headers, sockets and interconnects. They consist of pins, receptacles or spring pins assembled into thermoplastics or FR-4 epoxy laminate insulator bodies. They are available in DIP, SIP, strip and PGA packages in grids of .050", .070", 2 mm, .100" and .100" interstitial for PGA's.

## Electrical Data:

| SERIES: | 100-700 | 800 | 830 | 850 |
|---|---|---|---|---|
| - Rated current (Amps): | 1 | 3 | 3 | 1 |
| - Rated voltage: | 100 VRMS/150 VDC | | | |
| - Contact resistance: | 10 mΩ max. | | | |
| - Insulation resistance: | 10,000 MΩ min. | | | |
| - Dielectric strength: | 1000 VRMS min. | | | |
| (700 VRMS min. for series 117 Shrink DIP) | | | | |
| - Air and creepage distance (inch.): | .028 | .033/.028 | .020 | .016/.020 |
| (.012 for series 117 Shrink DIP) | | | | |
| - Capacitance(pF max): | .8 | 1 | 1 | 1 |

Electrical data above does not apply to BGA, PLCC, USB or Spring-Loaded connectors. Electrical data for these products can be found on the following pages: BGA – Page 113; PLCC - Page 113; USB - Pages 121 & 122; Spring-Loaded connectors – Pages 6 - 12.

**Operating temperature range:** -55/+125° C

**General tolerances for assembled connector products:**
- Lengths: +/- .010"
- Connector Flatness: .005" (up to 1' in length)
- Co-planarity of SMT Connectors: .005" (up to 1' in length)
- For connectors exceeding 1" in length the flatness /co-planarity may exceed .005". Please contact Technical Services for more information.

(Note: Specifications and tolerances are provided wherever possible. Due to the wide variety of connectors Mill-Max offers, the specific tolerances vary from product to product. If you need information regarding the tolerance of a particular part, please contact technical services.)

## Materials:

### Insulator Bodies:

Standard material is glass filled thermoplastic polyester (PCT), self extinguishing, rated UL 94 V-0.

Some surface mount, pin grid array and spring pin connector insulators are molded from high temperature Nylon 46, rated UL 94 V-0.

FR-4 Epoxy laminate is a thermoset material used in custom insulators and high temperature applications. It is especially useful because of its low Temperature Coefficient of Expansion (TCE). See chart below:

| | |
|---|---|
| TCE for molded insulator | 30 ppm/° C |
| TCE for 4-Layer PCB | 13 ppm/° C |
| TCE for unclad epoxy | 12 ppm/° C |

The above insulator materials are all suitable for lead free soldering processes up to 260° C.

For complete material properties of plastics used by Mill-Max see page 227.

For inquiries regarding other insulator materials, please contact Technical Services.

## Spring Pins:

Spring pins consist of precision-machined brass compo nents assembled together with beryllium copper or stainless steel springs. External components and internal springs are gold plated. Spring pins are designed to be used at mid-stroke. Over compression can cause damage restricting the movement of the plunger.

### Materials:

External Components (Body, Piston, Base, Tail):
**Brass Alloy** 360 UNS C36000 ASTM-B16

### Springs:

**Beryllium copper** UNS C17200 ASTM-B197
**Stainless Steel 302**

## Dimensional, Mechanical & Environmental Data:

**Standard tolerances for spring pins at initial height:**
Diameters +/- .002”
Lengths +/- .006”

**Mechanical life (Durability):** 1,000,000 cycles minimum
**Force tolerance:** +/- 20 g (See individual spring pin data on pages 6- 17 for forces)
**Stroke tolerance:** +/- .005”

### Environmental Data:

- Operating temperature range: -55/+125° C
- Vibration (No electrical discontinuity Greater than 1 µs): 0-200 HZ, 10G
- Shock (No electrical discontinuity Greater than 1 µs): 50 g

For complete material properties of metals, platings and plastics used by Mill-Max see page 227.

Where applicable, Mill-Max products and procedures are designed to meet the following standards:

| | | |
|---|---|---|
| MIL-STD 1916 | - | DOD preferred methods for acceptance of product |
| MIL-STD 202G | - | Test methods for electronic and electrical component parts |
| MIL-STD 45662 | - | Calibration system requirements, or ISO 10012 |
| MIL-F-14072 | - | Finishes for ground based electronic equipment |
| MIL-I-45208 | - | Inspection system requirements, or equivalent |
| MIL-S-83505 | - | General specification for sockets (lead, electronic components) |
| MIL-S-83734 | - | General specification for DIP sockets |

In the interest of improved design, quality and performance, Mill-Max reserves the right to make changes in its specifications without prior notice.

# SPRING-LOADED CONNECTORS

Mill-Max Spring-Loaded Connectors are ideal for a wide range of applications, from portable data acquisition units and mobile communication to medical and military equipment applications. Their unique design can be the perfect answer for many situations, establishing electrical continuity on virtually any surface including problematic vibratory environments. Unlike the fixed mating height created by pins and receptacles, spring-loaded connectors are able to compensate for floating heights and uneven mating surfaces, thus maintaining a reliable electrical connection.

When strategically placed within an assembly and utilized correctly (shielded from over compression and direct side load forces,) miniature spring-loaded connectors can provide a reliable connection up to a million cycles.

Some typical applications include:

- The internal battery connection in portable instruments, or as the external battery connection for charging these instruments (docking stations.)
- As a method for stacking printed circuit boards in an assembly. Utilizing spring pin connectors is a convenient approach to creating mezzanine-tiered board modules that can be assembled and disassembled quickly.
- Blind-mating applications. The spring pin piston need only make contact with its mating surface. This is typically a land or pad that is larger than the plunger diameter. Compare this to a pin and socket connection where alignment must be more precise for the pin to enter the socket.

Mill-Max Spring-Loaded Connectors can mate to the following surfaces:

- A conductive input/output pad found on the instrument pack itself.
- A gold-plated land on a circuit board. A hard gold over nickel plated surface is recommended for the mating surface. This is the same as would be used for the printed circuit fingers associated with card edge connectors.
- Individual Mill-Max gold-plated nail head pins which can be soldered to the mating circuit board to serve as targets.
- Mill-Max Target Connectors which provide a large .070” diameter flat, gold-plated circuit path to the board.

# SPRING-LOADED CONNECTORS
## Surface Mount, Low Profile
## Single and Double Row Strips

- Modular contacts for use on .100" grid, available in five heights from .137" to .236", supplied in single and double row contact strips.
- Precision-machined piston / base and gold plated components assure a 1,000,000 min. cycle life.
- Pistons have a long stroke relative to the low profile of the assembly.
- Low resistance, high current contacts are rated at 2 amps continuous, 3 amps peak.
- High temperature thermoplastic insulators are suitable for surface mount processes.
- Both 811 & 813 series, contact styles 1 thru 4, are available on 32mm wide carrier tape for pick and place assembly per EIA-481. See page 9 for strip lengths available and ordering information.

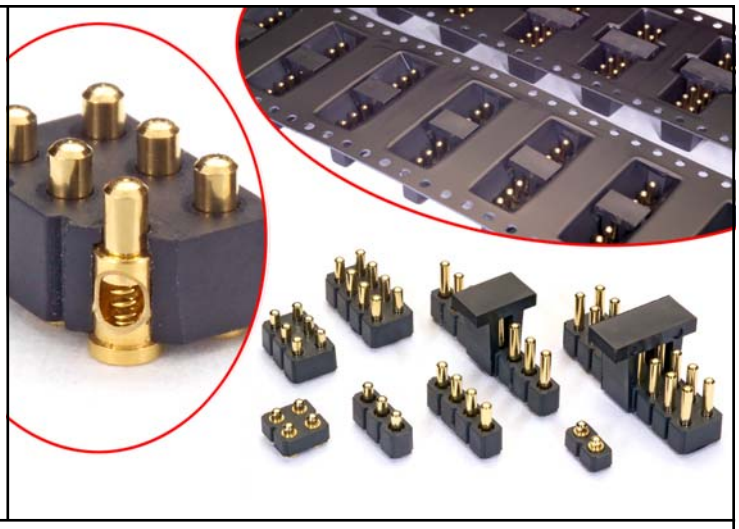

## SINGLE ROW Series 811

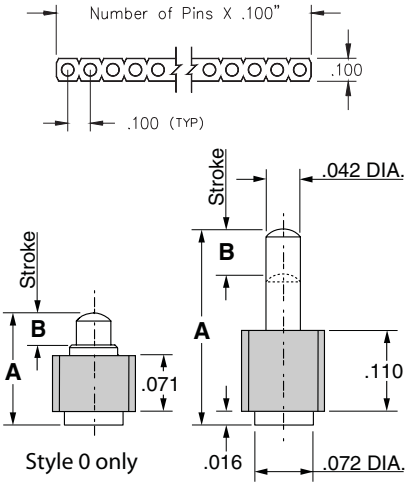


## DOUBLE ROW Series 813

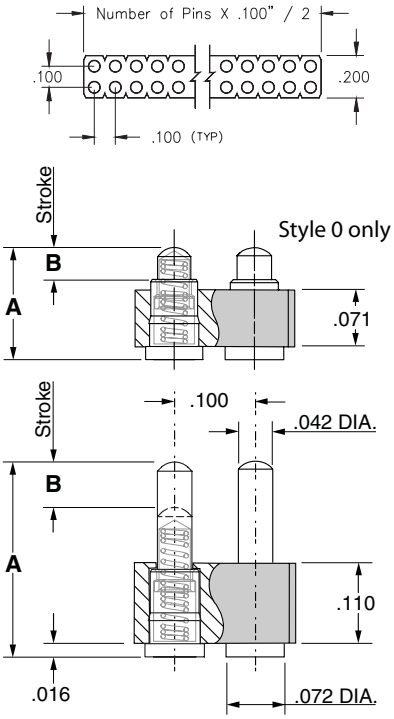


## Ordering Information

### Single Row Series 811

811-22-0XX-30-00X-101

**Specify contact style** 0-4

**Specify # of contacts** → 01-64

### Double Row Series 813

813-22-0XX-30-00X-101

**Specify contact style** 0-4

**Specify # of contacts** → 04-72

**For 811 & 813 Tape & Reel packaging See page 9**

| CONTACT STYLE | INITIAL HEIGHT A | MAX. STROKE B |
|---|---|---|
| 0 | .137 | .039 |
| 1 | .177 | .045 |
| 2 | .197 | .055 |
| 3 | .217 | .055 |
| 4 | .236 | .055 |

## Technical Specifications

**Materials:**

Contact piston & Base: Machined copper alloy plated 20µ" gold over 100µ" nickel
Spring: Beryllium copper plated 10µ" gold
Insulator: High temp. thermoplastic, rated UL94 V-0

**Mechanical:**

Spring force @ initial height (A): 25 grams
Spring force @ mid stroke (B/2): 60 grams
Durability: 1,000,000 cycles min.
Coplanarity: .005" (Single Row up to 10 pins; Double Row up to 20 pins) For higher pin counts contact Tech Support.

**Electrical:**

Voltage rating: 100Vrms/150Vdc
Current rating: 2A (continous), 3A (peak) per contact
Contact resistance: 20mΩ max.
Insulation resistance: 10,000MΩ min.
Dielectric strength: 700Vrms min.
Capacitance: 1pF max.

RoHS 2002/95/EC

# SPRING-LOADED CONNECTORS
## Surface Mount, High Profile
## Single and Double Row Strips

- Modular contacts for use on .100" grid, available in ten heights from .255" to .430", supplied in single and double row contact strips.
- Precision-machined piston / base and gold plated components assure a 1,000,000 min. cycle life.
- Pistons have a long stroke relative to the low profile of the assembly.
- Low resistance, high current contacts are rated at 2 amps continuous, 3 amps peak.
- High temperature thermoplastic insulators are suitable for surface mount processes.
- Both 812 & 814 series are available on 32mm or 44mm wide carrier tape for automated pick and place assembly per EIA-481. See page 9 for strip lengths available and ordering information.

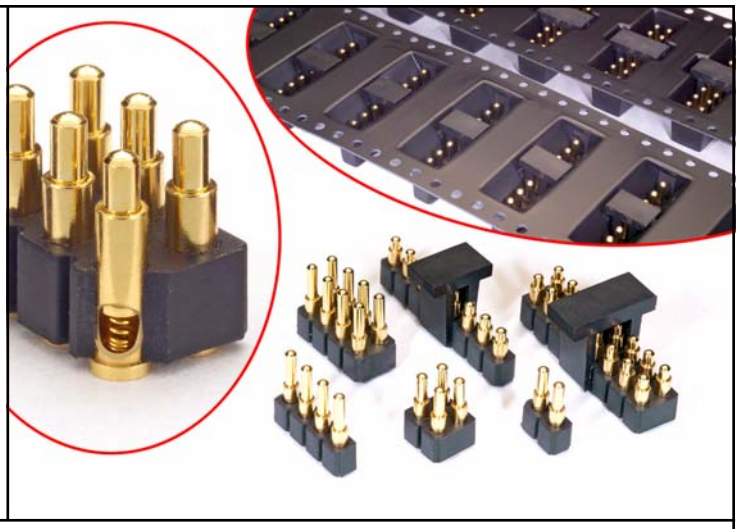

## SINGLE ROW Series 812

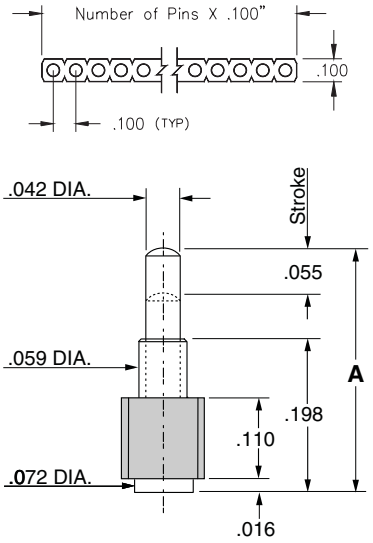


## DOUBLE ROW Series 814

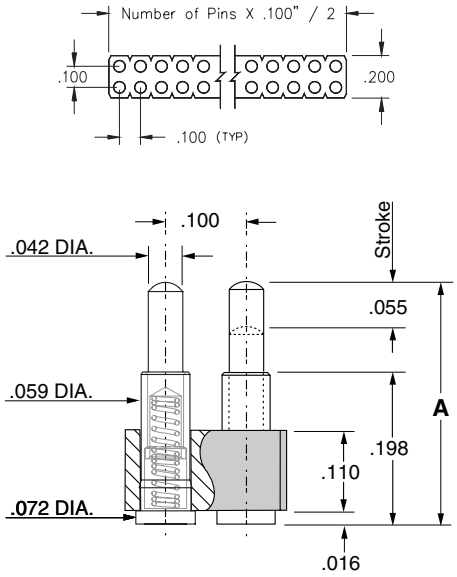


## Ordering Information

### Single Row Series 812

812-22-0XX-30-00X-101

**Specify contact style** 0-9

**Specify # of contacts** → 02-64

### Double Row Series 814

814-22-0XX-30-00X-101

**Specify contact style** 0-9

**Specify # of contacts** → 04-72

**For 812 & 814 Tape & Reel packaging See page 9**

| CONTACT STYLE | INITIAL HEIGHT A | CONTACT STYLE | INITIAL HEIGHT A |
|---|---|---|---|
| 0 | .255 | 5 | .350 |
| 1 | .275 | 6 | .370 |
| 2 | .295 | 7 | .390 |
| 3 | .315 | 8 | .410 |
| 4 | .335 | 9 | .430 |

### Technical Specifications

**Materials:**

Contact piston & Base: Machined copper alloy plated 20µ" gold over 100µ" nickel
Spring: Beryllium copper plated 10µ" gold
Insulator: High temp. thermoplastic rated UL94 V-0

**Mechanical:**

Spring force @ initial height (A): 25 grams
Spring force @ mid stroke (.0275): 60 grams
Durability: 1,000,000 cycles min.
Coplanarity: .005" (Single Row up to 10 pins; Double Row up to 20 pins) For higher pin counts contact Tech Support.

**Electrical:**

Voltage rating: 100Vrms/150Vdc
Current rating: 2A (continous), 3A (peak) per contact
Contact resistance: 20mΩ max.
Insulation resistance: 10,000MΩ min.
Dielectric strength: 700Vrms min.
Capacitance: 1pF max.

RoHS 2002/95/EC

# SPRING-LOADED CONNECTORS
## Surface Mount, High Profile
## Single and Double Row Strips

- Modular contacts for use on .100” grid, available in a height of .288”, supplied in single and double row contact strips.
- Precision-machined piston / base and gold plated components assure a 1,000,000 min. cycle life.
- Pistons have a .045” mid. stroke and a .090” max. stroke.
- Low resistance, high current contacts are rated at 2 amps continuous, 3 amps peak.
- High temperature thermoplastic insulators are suitable for surface mount processes.
- 819 & 820 series contact strips are designed for placement onto a Ø .082” solder pad prior to reflow soldering.

## SINGLE ROW Series 819

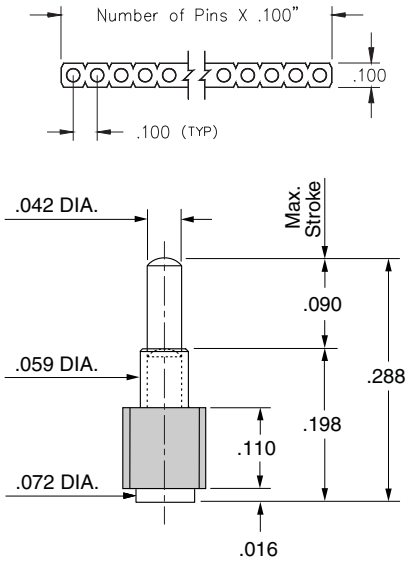


## DOUBLE ROW Series 820

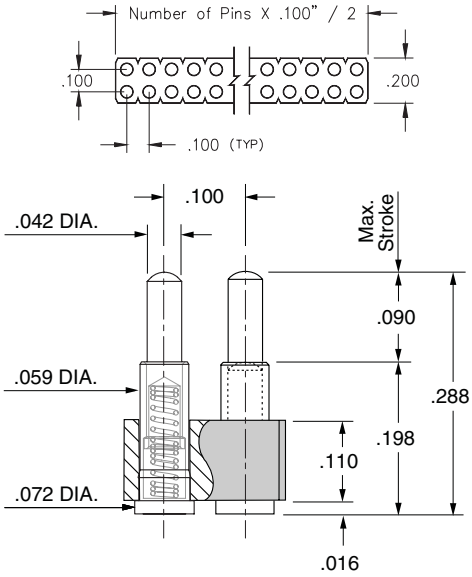


## Ordering Information

| | Single Row Series 819 |
|---|---|
| **Fig. 1** | 819-22-0XX-30-001101<br>**Specify # of contacts** → 01-64 |

| | Double Row Series 820 |
|---|---|
| **Fig. 2** | 820-22-0XX-30-001101<br>**Specify # of contacts** → 04-72 |

## Technical Specifications

**Materials:**

Contact piston & Base: Machined copper alloy plated 20µ” gold over 100µ” nickel
Spring: Beryllium copper plated 10µ” gold
Insulator: High temp. thermoplastic rated UL94 V-0

**Mechanical:**

Spring force @ initial height : 25 grams
Spring force @ mid stroke : 60 grams
Durability: 1,000,000 cycles min.

**Electrical:**

Voltage rating: 100Vrms/150Vdc
Current rating: 2A (continous), 3A (peak) per contact
Contact resistance: 20mΩ max.
Insulation resistance: 10,000MΩ min.
Dielectric strength: 700Vrms min.
Capacitance: 1pF max.

RoHS 2002/95/EC

- Modular contacts for use on .100” grid, supplied in single row contact strips. Piston action is parallel to the board surface.
- Precision-machined piston / base and gold plated components assure a 1,000,000 min. cycle life.
- Pistons have a .045” mid. stroke & .090” max. stroke.
- Low resistance, high current contacts are rated at 2 amps continuous, 3 amps peak.
- High temperature thermoplastic insulators are suitable for surface mount processes.
- 810 series contact strips are designed for manual placement onto solder pads.

## Single Row Series 810

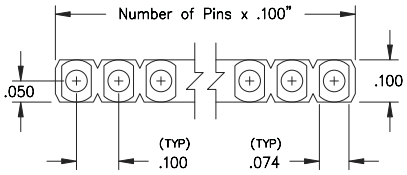


TOP VIEW

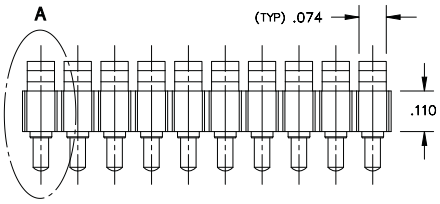


FRONT VIEW

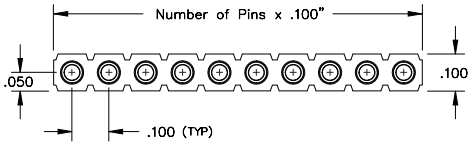


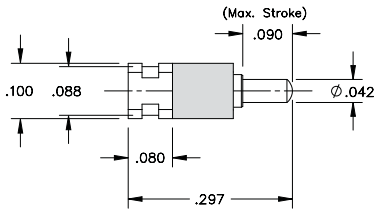


DETAIL ‘A’

### Suggested P.C.B. FOOTPRINT

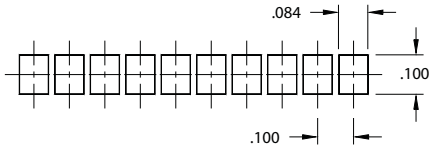


Coplanarity .005”. For Pin Counts >10 positions consult Technical Support.

## Ordering Information

**Series 810** **Single Row Surface Mount**

810-22-0_ _-40-001101

**Specify # of pins** → 01-10

*For Electrical, Mechanical & Enviromental Data, See pg. 4.1*

*For RoHS compliance select ◇ plating code.*

## Technical Specifications

**Materials:**

Contact piston & Base: Machined copper alloy plated 20µ” gold over 100µ” nickel.
Spring: Beryllium copper plated 10µ” gold
Insulator: High temp. thermoplastic rated UL94 V-0

**Mechanical:**

Spring force @ initial height: 25 grams
Spring force @ mid stroke: 60 grams
Durability: 1,000,000 cycles min.

**Electrical:**

Voltage rating: 100Vrms/150Vdc
Current rating: 2A (continous), 3A (peak) per contact
Contact resistance: 20mΩ max.
Insulation resistance: 10,000MΩ min.
Dielectric strength: 700Vrms min.
Capacitance: 1pF max.

RoHS 2002/95/EC

- Modular contacts for use on .100" grid, available in ten heights from .255" to .430", supplied in single and double row contact strips.
- Precision-machined piston / base and gold plated components assure a 1,000,000 min. cycle life.
- Pistons have a .0275 mid stroke & .055 max stroke.
- Low resistance, high current contacts are rated at 2 amps continuous, 3 amps peak.
- High temperature thermoplastic insulators are suitable for surface mount processes.
- 812 & 814 series contact strips are designed for manual placement into Ø .023±.003" plated-thru-holes in the circuit board prior to intrusive reflow soldering.

## Single Row Series 812...01X101

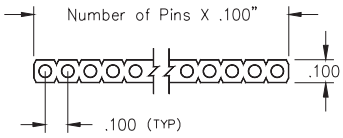


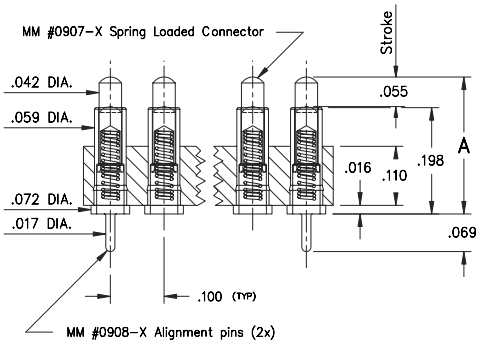


## Double Row Series 814...01X101

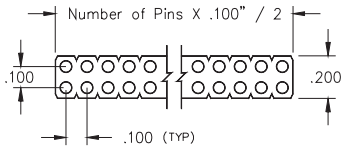


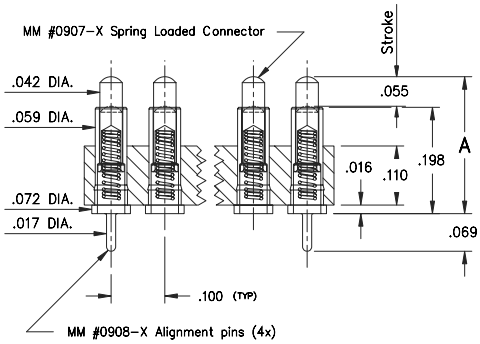


## Ordering Information

### Single Row Series 812...01X101

812-22-0XX-30-01X-101

**Specify contact style** 0-9

**Specify # of contacts** → 03-64

### Double Row Series 814...01X101

814-22-0XX-30-01X-101

**Specify contact style** 0-9

**Specify # of contacts** → 06-72

| CONTACT STYLE | INITIAL HEIGHT A | CONTACT STYLE | INITIAL HEIGHT A |
|---|---|---|---|
| 0 | .255 | 5 | .350 |
| 1 | .275 | 6 | .370 |
| 2 | .295 | 7 | .390 |
| 3 | .315 | 8 | .410 |
| 4 | .335 | 9 | .430 |

## Technical Specifications

**Materials:**

Contact piston & Base: Machined copper alloy plated 20µ" gold over 100µ" nickel
Spring: Beryllium copper plated 10µ" gold
Insulator: High temp. thermoplastic rated UL94 V-0

**Mechanical:**

Spring force @ initial height (A): 25 grams
Spring force @ mid stroke (B/2): 60 grams
Durability: 1,000,000 cycles min.

**Electrical:**

Voltage rating: 100Vrms/150Vdc
Current rating: 2A (continous), 3A (peak) per contact
Contact resistance: 20mΩ max.
Insulation resistance: 10,000MΩ min.
Dielectric strength: 700Vrms min.
Capacitance: 1pF max.

RoHS 2002/95/EC

## Ordering Information for Series 811/812/813/814 in Carrier Tape

### Single Row Series 811

811-22-0XX-30-00X-191

**Specify contact style** 0-4

**Specify # of contacts** 02 - 08

( 32mm wide tape, 400 parts per 13” reel )

### Double Row Series 813

813-22-0XX-30-00X-191

**Specify contact style** 0-4

**Specify # of contacts** 04 - 16

( 32mm wide tape, 400 parts per 13” reel )

### Single Row Series 811

811-22-0XX-30-00X-191

**Specify contact style** 1-4

**Specify # of contacts** 09 - 12

( 44mm wide tape, 200 parts per 13” reel )

### Double Row Series 813

813-22-0XX-30-00X-191

**Specify contact style** 1-4

**Specify # of contacts** 18 - 24

( 44mm wide tape, 200 parts per 13” reel )

### Single Row Series 812

812-22-0XX-30-00X-191

**Specify contact style** 0-2

**Specify # of contacts** 02 - 08

( 32mm wide tape, 400 parts per 13” reel )

### Double Row Series 814

814-22-0XX-30-00X-191

**Specify contact style** 0-2

**Specify # of contacts** 04 - 16

( 32mm wide tape, 400 parts per 13” reel )

### Single Row Series 812

812-22-0XX-30-00X-191

**Specify contact style** 0-2

**Specify # of contacts** 09 - 12

( 44mm wide tape, 200 parts per 13” reel )

### Double Row Series 814

814-22-0XX-30-00X-191

**Specify contact style** 0-2

**Specify # of contacts** 18 - 24

( 44mm wide tape, 200 parts per 13” reel )

### Single Row Series 812

812-22-0XX-30-00X-191

**Specify contact style** 3-9

**Specify # of contacts** 02 - 12

( 44mm wide tape, 200 parts per 13” reel )

### Double Row Series 814

814-22-0XX-30-00X-191

**Specify contact style** 3-9

**Specify # of contacts** 04 - 24

( 44mm wide tape, 200 parts per 13” reel )

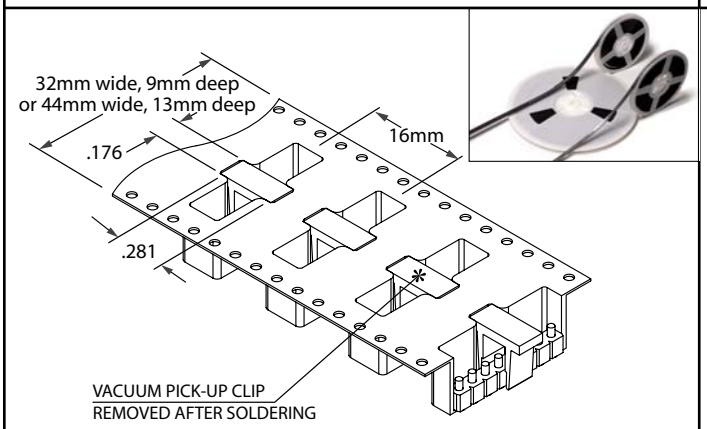


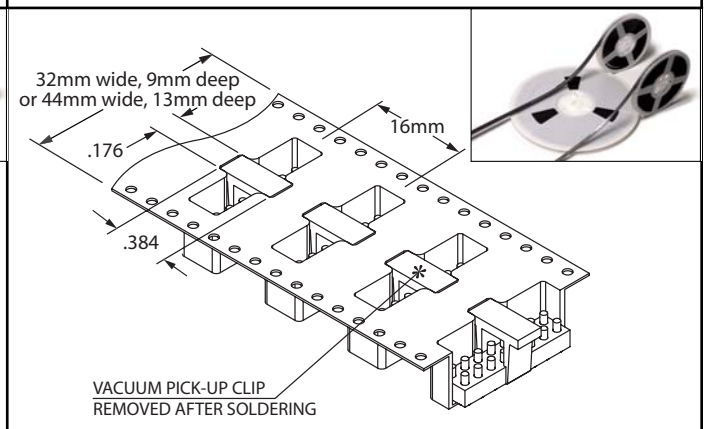

# SPRING-LOADED CONNECTORS
## Through Hole Mount
## Single and Double Row Strips

- Modular contacts for use on .100” grid, available in five heights from .137” to .236”, supplied in single and double row contact strips.
- Precision-machined piston / base and gold plated components assure a 1,000,000 min. cycle life.
- Pistons have a long stroke relative to the low profile of the assembly.
- Low resistance, high current contacts are rated at 2 amps continuous, 3 amps peak.
- High temperature thermoplastic insulators are suitable for surface mount processes.
- 821 & 823 series contact strips are designed for manual placement into Ø.022±.003” plated-thru-holes in the circuit board prior to hand, wave or reflow soldering.

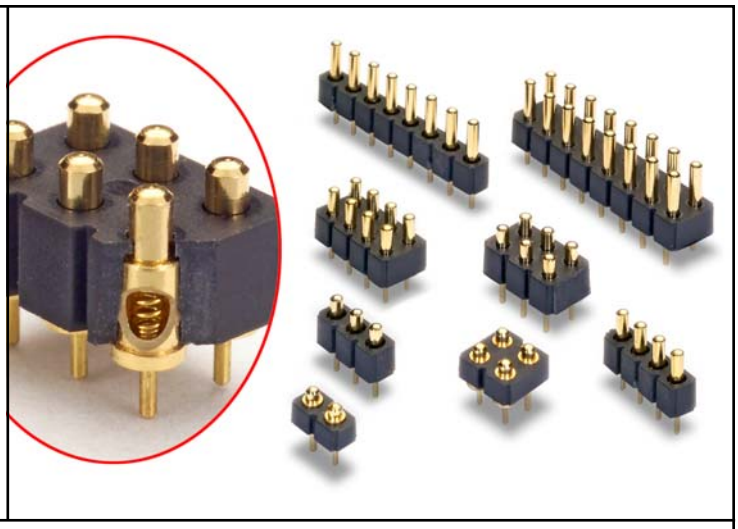

### SINGLE ROW Series 821

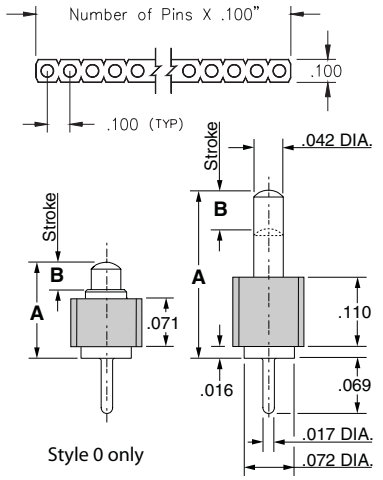


### DOUBLE ROW Series 823

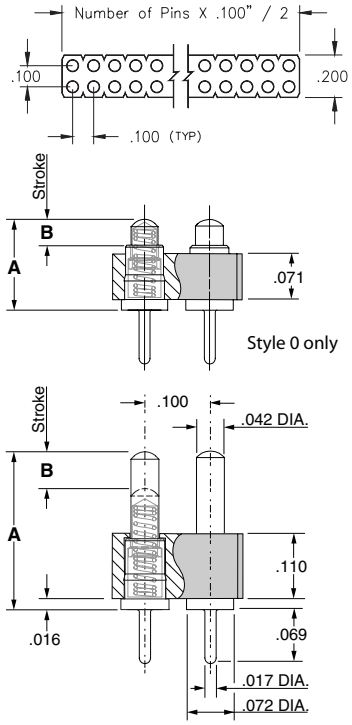


## Ordering Information

### Single Row Series 821

821-22-0XX-10-00X-101

**Specify contact style** 0-4

**Specify # of contacts** → 02-64

### Double Row Series 823

823-22-0XX-10-00X-101

**Specify contact style** 0-4

**Specify # of contacts** → 04-72

| CONTACT STYLE | INITIAL HEIGHT A | MAX. STROKE B |
|---|---|---|
| 0 | .137 | .039 |
| 1 | .177 | .045 |
| 2 | .197 | .055 |
| 3 | .217 | .055 |
| 4 | .236 | .055 |

## Technical Specifications

**Materials:**

Contact piston & Base: Machined copper alloy plated 20µ” gold over 100µ” nickel
Spring: Beryllium copper plated 10µ” gold
Insulator: High temp. thermoplastic rated UL94 V-0

**Mechanical:**

Spring force @ initial height (A): 25 grams
Spring force @ mid stroke (B/2): 60 grams
Durability: 1,000,000 cycles min.

**Electrical:**

Voltage rating: 100Vrms/150Vdc
Current rating: 2A (continous), 3A (peak) per contact
Contact resistance: 20mΩ max.
Insulation resistance: 10,000MΩ min.
Dielectric strength: 700Vrms min.
Capacitance: 1pF max.

RoHS 2002/95/EC

# SPRING-LOADED CONNECTORS
## Through Hole Mount
## Single and Double Row Strips

- Modular contacts for use on .100” grid, available in a height of .302”, supplied in single and double row contact strips.
- Precision-machined piston / base and gold plated components assure a 1,000,000 min. cycle life.
- Pistons have a .045 mid stroke & .090 max stroke.
- Low resistance, high current contacts are rated at 2 amps continuous, 3 amps peak.
- High temperature thermoplastic insulators are suitable for surface mount processes.
- 825 & 827 series contact strips are designed for manual placement into Ø .030±.003” plated-thru-holes in the circuit board prior to hand, wave or reflow soldering.

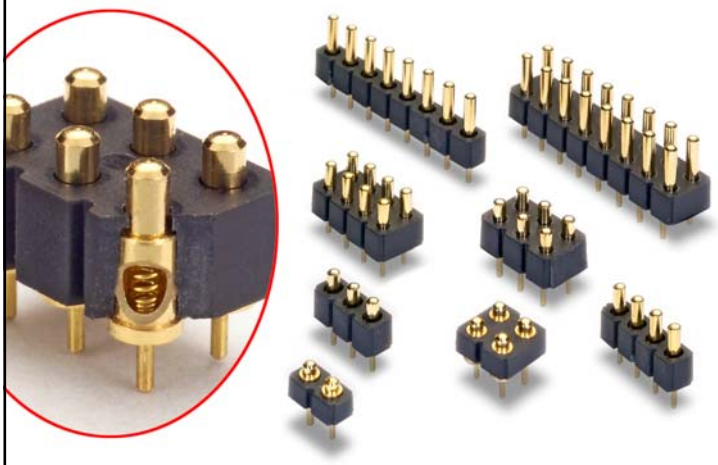

### SINGLE ROW Series 825

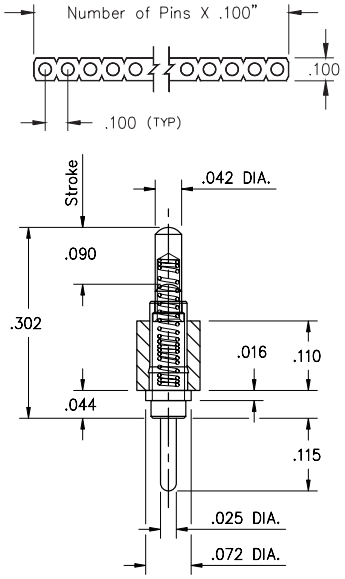


### DOUBLE ROW Series 827

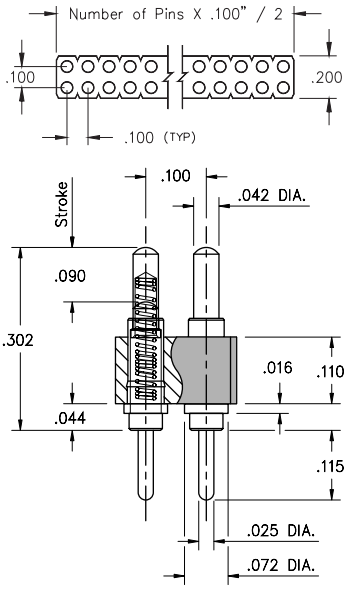


## Ordering Information

| | Single Row Series 825 |
|---|---|
| **Fig. 1** | 825-22-0XX-10-001101<br>**Specify # of contacts** → 02-64 |

| | Double Row Series 827 |
|---|---|
| **Fig. 2** | 827-22-0XX-10-001101<br>**Specify # of contacts** → 04-72 |

## Technical Specifications

**Materials:**

Contact piston & Base: Machined copper alloy plated 20µ” gold over 100µ” nickel
Spring: Beryllium copper plated 10µ” gold
Insulator: High temp. thermoplastic rated UL94 V-0

**Mechanical:**

Spring force @ initial height (A): 25 grams
Spring force @ mid stroke (B/2): 60 grams
Durability: 1,000,000 cycles min.

**Electrical:**

Voltage rating: 100Vrms/150Vdc
Current rating: 2A (continous), 3A (peak) per contact
Contact resistance: 20mΩ max.
Insulation resistance: 10,000MΩ min.
Dielectric strength: 700Vrms min.
Capacitance: 1pF max.

RoHS 2002/95/EC

- Modular contacts for use on .100" grid, available in ten heights from .255" to .430", supplied in single and double row contact strips.
- Precision-machined piston / base and gold plated components assure a 1,000,000 min. cycle life.
- Pistons have a .0275 mid stroke & .055 max stroke.
- Low resistance, high current contacts are rated at 2 amps continuous, 3 amps peak.
- High temperature thermoplastic insulators are suitable for surface mount processes.
- 816 & 818 series contact strips are designed for manual placement into Ø .023±.003" plated-thru-holes in the circuit board prior to intrusive reflow soldering.

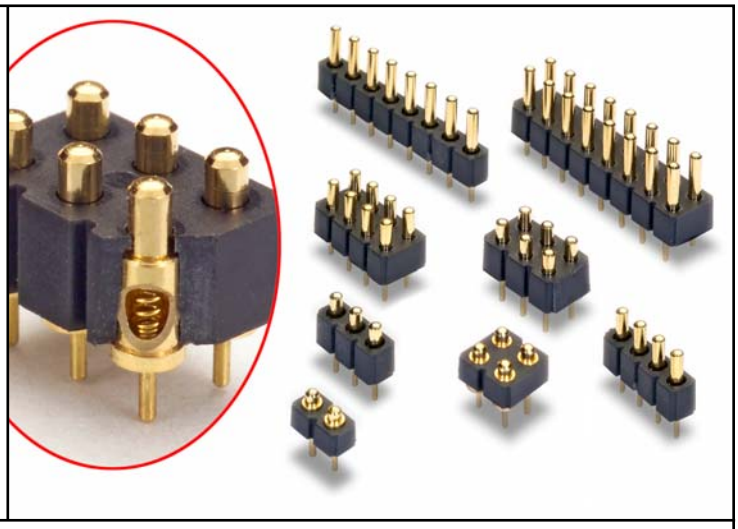

## Single Row Series 816...00X101

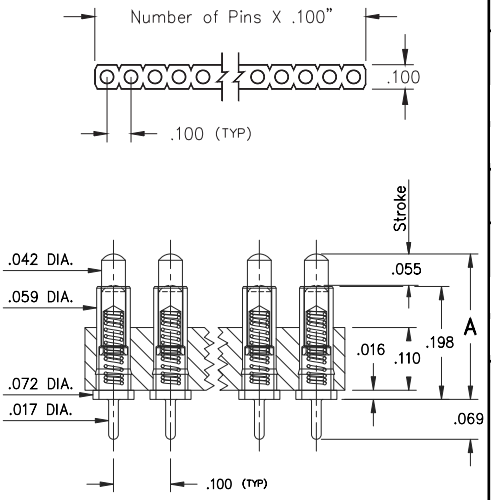


## Double Row Series 818...00X101

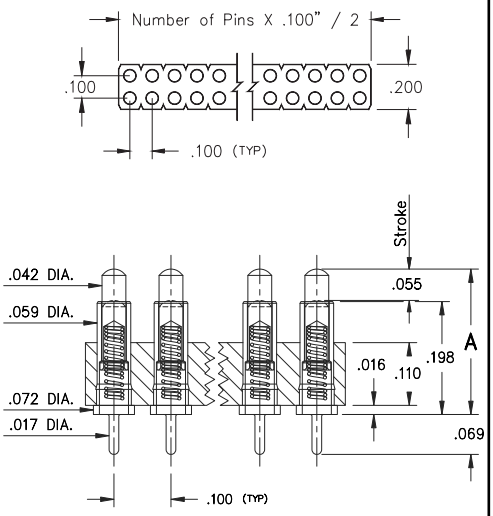


## Ordering Information

### Single Row Series 816...00X101

816-22-0XX-10-00X101

**Specify contact style** 0-9

**Specify # of contacts** → 02-64

### Double Row Series 818...00X101

818-22-0XX-10-00X101

**Specify contact style** 0-9

**Specify # of contacts** → 04-72

| CONTACT STYLE | INITIAL HEIGHT A | CONTACT STYLE | INITIAL HEIGHT A |
|---|---|---|---|
| 0 | .255 | 5 | .350 |
| 1 | .275 | 6 | .370 |
| 2 | .295 | 7 | .390 |
| 3 | .315 | 8 | .410 |
| 4 | .335 | 9 | .430 |

## Technical Specifications

**Materials:**

Contact piston & Base: Machined copper alloy plated 20µ" gold over 100µ" nickel
Spring: Beryllium copper plated 10µ" gold
Insulator: High temp. thermoplastic rated UL94 V-0

**Mechanical:**

Spring force @ initial height (A): 25 grams
Spring force @ mid stroke (B/2): 60 grams
Durability: 1,000,000 cycles min.

**Electrical:**

Voltage rating: 100Vrms/150Vdc
Current rating: 2A (continous), 3A (peak) per contact
Contact resistance: 20mΩ max.
Insulation resistance: 10,000MΩ min.
Dielectric strength: 700Vrms min.
Capacitance: 1pF max.

RoHS 2002/95/EC

- Modular contacts for use on .100” grid, available in a height of .294”, supplied in single contact strips.
- Precision-machined piston / base and gold plated components assure a 1,000,000 min. cycle life.
- Pistons have a .045” mid stroke and .090” max stroke.
- Low resistance, high current contacts are rated at 2 amps continuous, 3 amps peak.
- High temperature thermoplastic insulators are suitable for wave and reflow soldering processes.
- 829 series contact strips are designed for manual placement into Ø .032±.003” plated-thru-holes in the circuit board prior to hand, wave or reflow soldering.

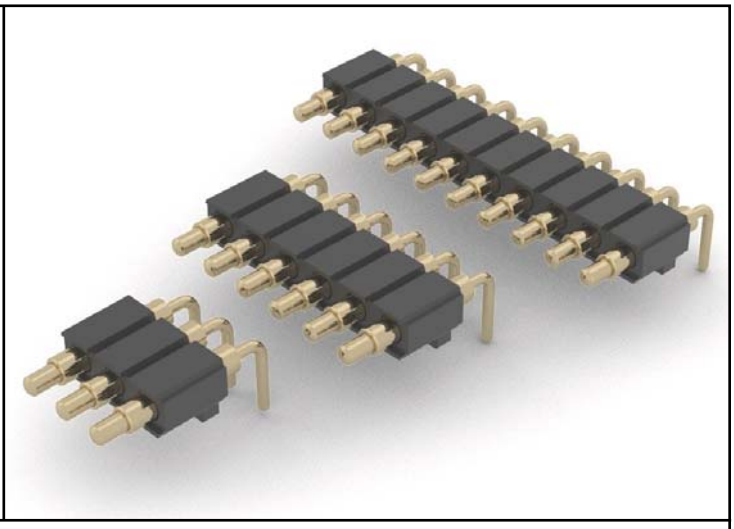

## Single Row Series 829

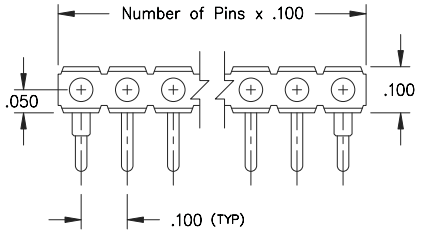


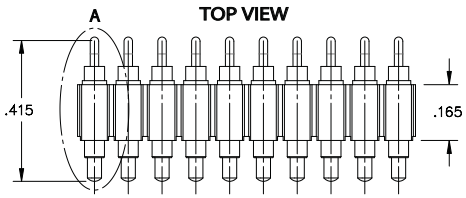


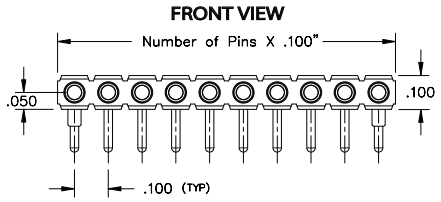


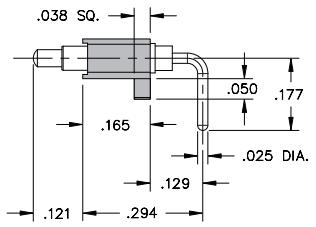


DETAIL ‘A’

### Suggested P.C.B Footprint

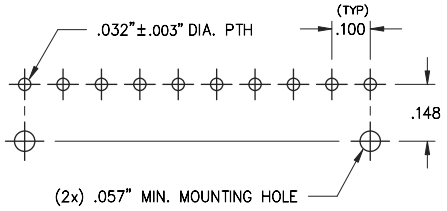


## Ordering Information

**Series 829** **Single Row Right Angle**

829-22-0_ _-20-001101

**Specify # of pins** → 02-10

*For Electrical, Mechanical & Enviromental Data, See pg. 4.1*

*For RoHS compliance select ◇ plating code.*

## Technical Specifications

**Materials:**

Contact piston & Base: Machined copper alloy plated 20µ” gold over 100µ” nickel.
Spring: Beryllium copper plated 10µ” gold
Insulator: High temp. thermoplastic rated UL94 V-0

**Mechanical:**

Spring force @ initial height: 25 grams
Spring force @ mid stroke: 60 grams
Durability: 1,000,000 cycles min.

**Electrical:**

Voltage rating: 100Vrms/150Vdc
Current rating: 2A (continous), 3A (peak) per contact
Contact resistance: 20mΩ max.
Insulation resistance: 10,000MΩ min.
Dielectric strength: 700Vrms min.
Capacitance: 1pF max.

RoHS 2002/95/EC

- Modular contacts for use on .050" grid, supplied in single and double row contact strips.
- Precision-machined piston / base and gold plated components assure a 1,000,000 min. cycle life.
- Pistons have a .0275" mid stroke & .055" max stroke.
- Low resistance, high current contacts are rated at 2 amps continuous, 3 amps peak.
- High temperature thermoplastic insulators are suitable for surface mount processes.
- 854 & 855 series contact strips are designed for manual placement into Ø .023±.003" plated-thru-holes in the circuit board.

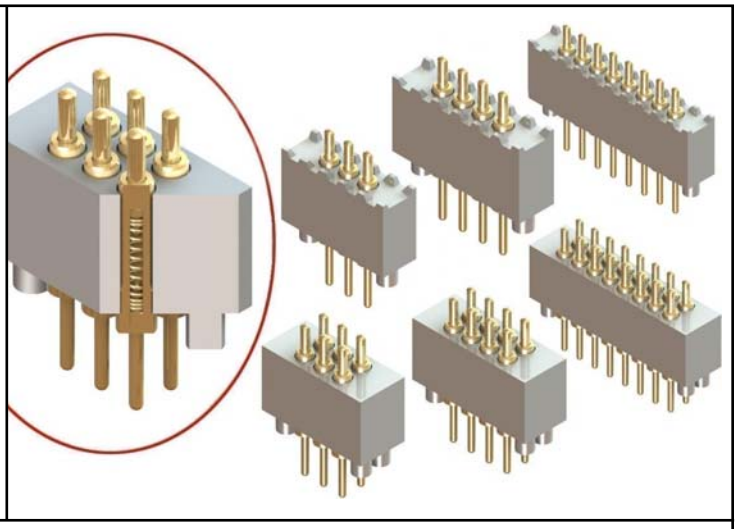

## Single Row Series 854

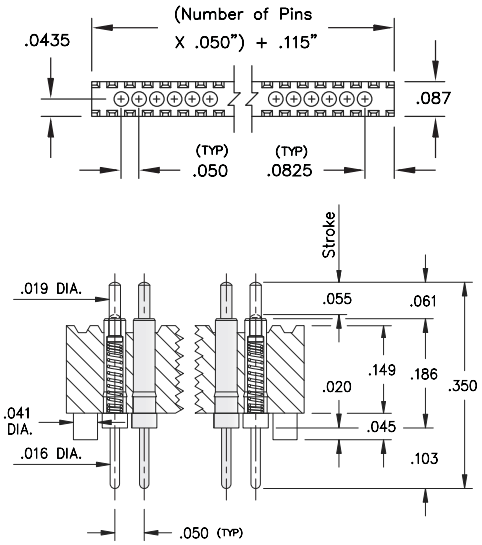


## Double Row Series 855

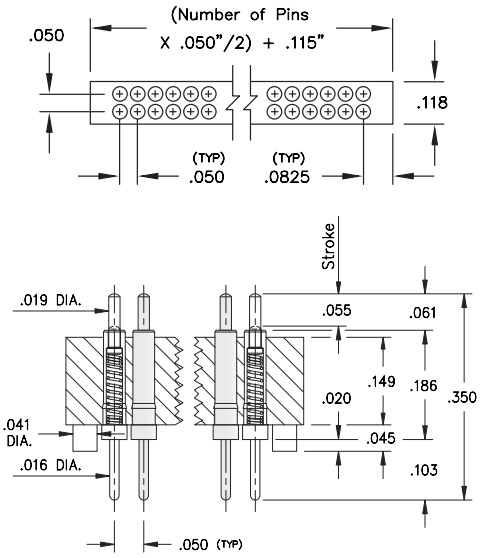


## Ordering Information

**Series 854** — **Single Row Through Hole Mount**

854-22-0_ _-10-001101

**Specify # of pins** → 02-20

**Series 855** — **Double Row Through Hole Mount**

855-22-0_ _-10-001101

**Specify # of pins** → 04-40

*For Electrical, Mechanical & Enviromental Data, See pg. 4.1*

*For RoHS compliance select ◇ plating code.*

## Technical Specifications

**Materials:**

Contact piston & Base: Machined copper alloy plated 20µ" gold over 100µ" nickel.
Spring: Beryllium copper plated 10µ" gold
Insulator: High temp. thermoplastic rated UL94 V-0

**Mechanical:**

Spring force @ initial height (A): 25 grams
Spring force @ mid stroke (B/2): 60 grams
Durability: 1,000,000 cycles min.

**Electrical:**

Voltage rating: 100Vrms/150Vdc
Current rating: 2A (continous), 3A (peak) per contact
Contact resistance: 20mΩ max.
Insulation resistance: 10,000MΩ min.
Dielectric strength: 700Vrms min.
Capacitance: 1pF max.

RoHS 2002/95/EC

# SPRING-LOADED CONNECTORS
## .050" Grid Surface Mount, High Density
## Single and Double Row Strips

**Series 854...30-001101**
**855...30-001101**

- Modular contacts for use on .050" grid, supplied in single and double row contact strips.
- Precision-machined piston / base and gold plated components assure a 1,000,000 min. cycle life.
- Pistons have a .0275" mid stroke & .055" max stroke.
- Low resistance, high current contacts are rated at 2 amps continuous, 3 amps peak.
- High temperature thermoplastic insulators are suitable for surface mount processes.
- 854 & 855 series contact strips are designed for manual placement onto .040" Ø solder pads.

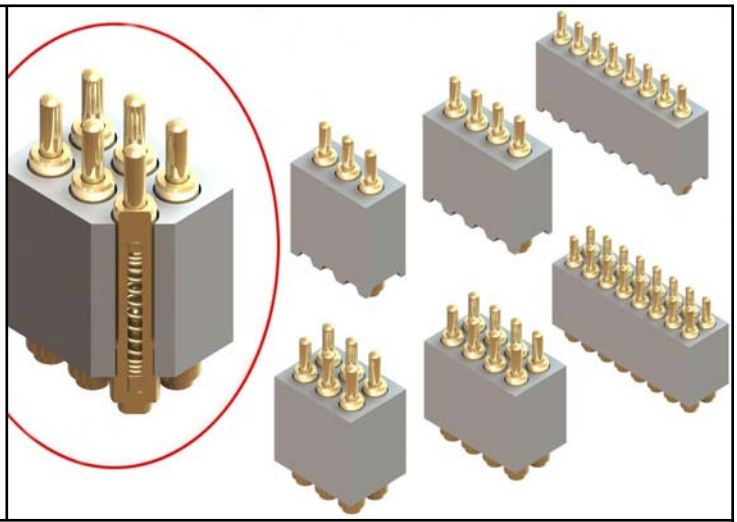

### Single Row Series 854

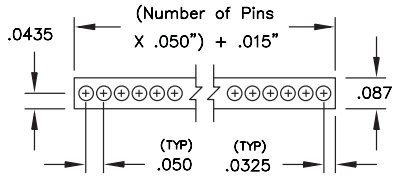


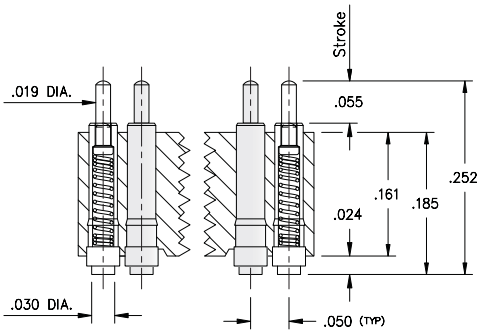


### Double Row Series 855

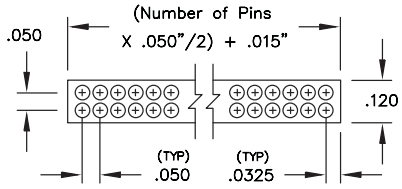


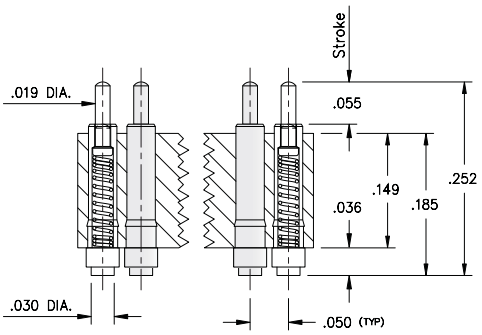


## Ordering Information

**Series 854** — **Single Row Surface Mount**

854-22-0_ _-30-001101

**Specify # of pins** → 02-20

**Series 855** — **Double Row Surface Mount**

855-22-0_ _-30-001101

**Specify # of pins** → 04-40

*For Electrical, Mechanical & Enviromental Data, See pg. 4.1*

*For RoHS compliance select ◇ plating code.*

## Technical Specifications

**Materials:**

Contact piston & Base: Machined copper alloy plated 20µ" gold over 100µ" nickel.
Spring: Beryllium copper plated 10µ" gold
Insulator: High temp. thermoplastic rated UL94 V-0

**Mechanical:**

Spring force @ initial height (A): 25 grams
Spring force @ mid stroke (B/2): 60 grams
Durability: 1,000,000 cycles min.

**Electrical:**

Voltage rating: 100Vrms/150Vdc
Current rating: 2A (continous), 3A (peak) per contact
Contact resistance: 20mΩ max.
Insulation resistance: 10,000MΩ min.
Dielectric strength: 700Vrms min.
Capacitance: 1pF max.

RoHS 2002/95/EC

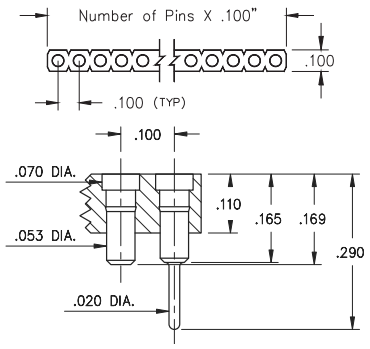

Fig. 1

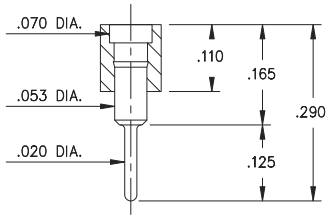

Fig. 2

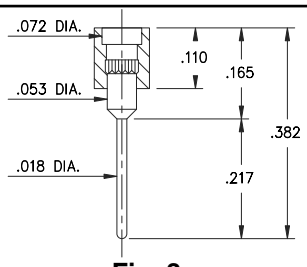

Fig. 3

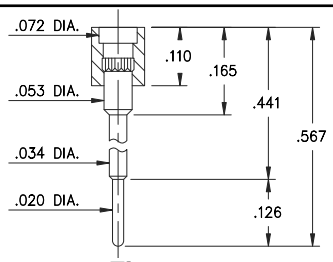

Fig. 4

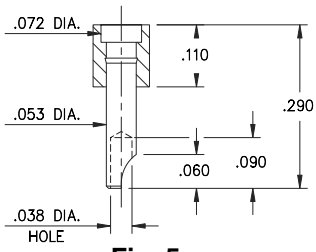

Fig. 5

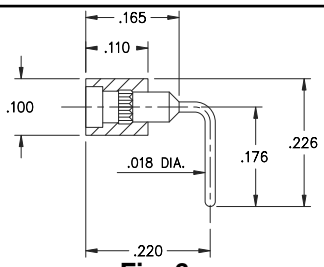

Fig. 6

- Series 319, 330 and 399 single row strips may be cut to any length.
- Spring Target connectors present a large flat surface for making tangent connections to our standard .042" dia spring pin plungers. The target connectors provide an excellent gold plated conductive path back to the board mounted spring pin connector.
- Target connectors use MM #1938, #1940, #1941, #1942 and #3024 pins. See page 185 for details.
- Insulators are high temp. thermoplastic.

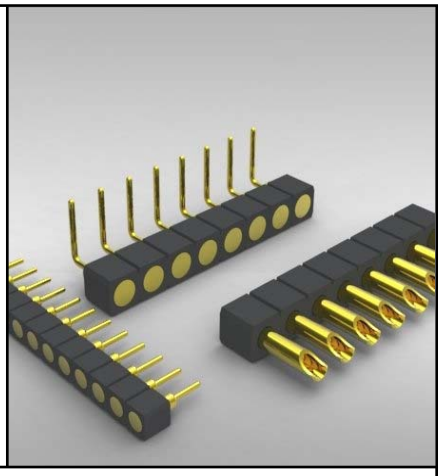

## Ordering Information

| | | |
|---|---|---|
| Fig. 1 | **Series 319...041** | **SMT w/ Alignment Pins** |
| | 319-10-1_ _-30-041000 | |
| | **Specify # of pins** → | 01-64 |
| Fig. 2 | **Series 319...001** | **Standard Solder Tails** |
| | 319-10-1_ _-00-001000 | |
| | **Specify # of pins** → | 01-64 |
| Fig. 3 | **Series 319...002** | **Long Solder Tails** |
| | 319-10-1_ _-00-002000 | |
| | **Specify # of pins** → | 01-64 |
| Fig. 4 | **Series 319...005** | **Elevated Solder Tails** |
| | 319-10-1_ _-00-005000 | |
| | **Specify # of pins** → | 01-64 |
| Fig. 5 | **Series 330...240** | **Solder Cups** |
| | 330-10-1_ _-10-240000 | |
| | **Specify # of pins** → | 01-64 |
| Fig. 6 | **Series 399...008** | **Right Angle Solder Tails** |
| | 399-10-1_ _-10-008000 | |
| | **Specify # of pins** → | 01-64 |

*For Electrical, Mechanical & Enviromental Data, See pg. 4*

RoHS 2002/95/EC

| | | | | |
|---|---|---|---|---|
| PLATING CODE = | **10** | | | |
| Pin Plating | 10 µ" Au | | | |

# .100" Grid Target Connectors for Spring-Loaded Assemblies
## Double Row

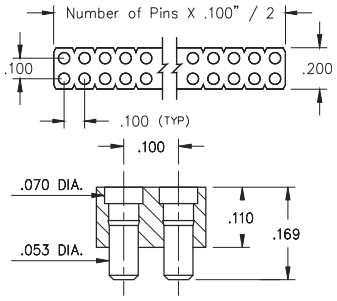


Coplanarity .005". For Pin Counts >20 positions consult Technical Support.

**Fig. 1**

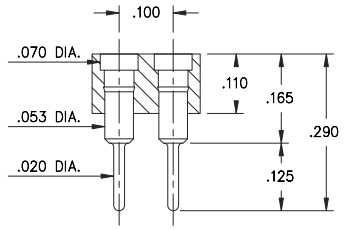


**Fig. 2**

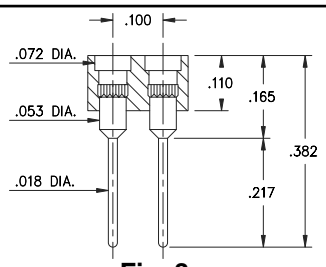


**Fig. 3**

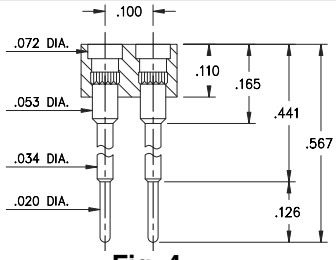


**Fig. 4**

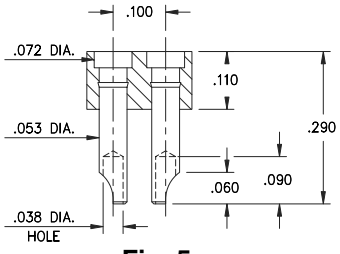


**Fig. 5**

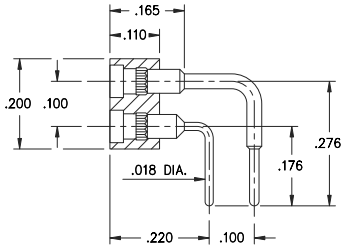


**Fig. 6**

- Series 419, 430 and 499 double row strips may be cut to any length.
- Spring Target connectors present a large flat surface for making tangent connections to our standard .042" dia spring pin plungers. The target connectors provide an excellent gold plated conductive path back to the board mounted spring pin connector.
- Target connectors use MM #1938, #1940, #1941, #1942 and #3024 pins. See page 185 for details.
- Insulators are high temp. thermoplastic.

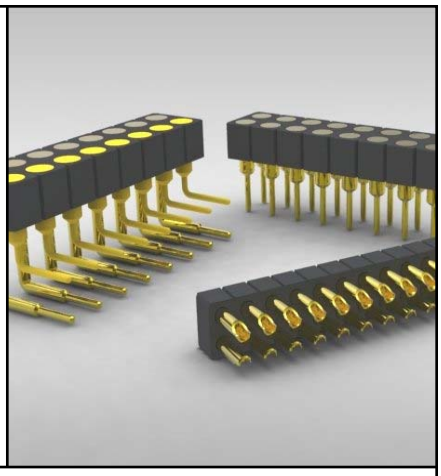

## Ordering Information

| | | |
|---|---|---|
| **Fig. 1** | **Series 419...041** | **Surface Mount** |
| | 419-10-2_ _-30-041000 | |
| | **Specify # of pins** → | 04-64 |
| **Fig. 2** | **Series 419...001** | **Standard Solder Tails** |
| | 419-10-2_ _-00-001000 | |
| | **Specify # of pins** → | 04-64 |
| **Fig. 3** | **Series 419...002** | **Long Solder Tails** |
| | 419-10-2_ _-00-002000 | |
| | **Specify # of pins** → | 04-64 |
| **Fig. 4** | **Series 419...005** | **Elevated Solder Tails** |
| | 419-10-2_ _-00-005000 | |
| | **Specify # of pins** → | 04-64 |
| **Fig. 5** | **Series 430...240** | **Solder Cups** |
| | 430-10-2_ _-10-240000 | |
| | **Specify # of pins** → | 04-64 |
| **Fig. 6** | **Series 499...008** | **Right Angle Solder Tails** |
| | 499-10-2_ _-10-008000 | |
| | **Specify # of pins** → | 04-64 |

*For Electrical, Mechanical & Enviromental Data, See pg. 4*

RoHS 2002/95/EC

| | | | | |
|---|---|---|---|---|
| PLATING CODE = | **10** | | | |
| Pin Plating | 10 µ" Au | | | |

# SPRING-LOADED CONNECTORS
## .050" Grid Target Connectors for Spring-Loaded Assemblies
## Single and Double Row



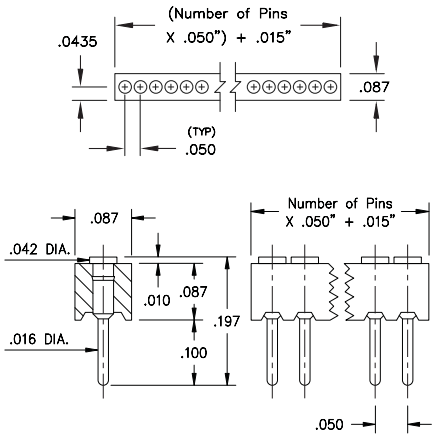


**Fig. 1**

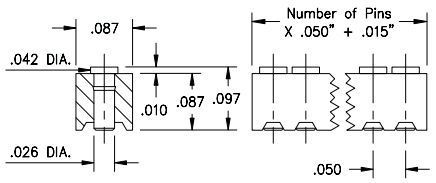


Coplanarity .005". For Pin Counts >20 positions consult Technical Support.

**Fig. 2**

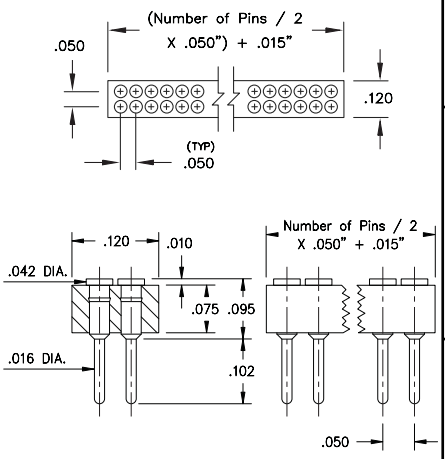


**Fig. 3**

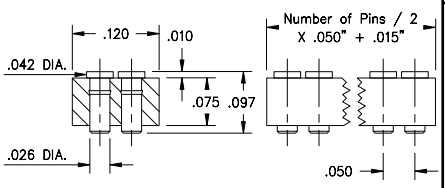


Coplanarity .005". For Pin Counts >40 positions consult Technical Support.

**Fig. 4**

- Series 856, 857 single and double row strips may be cut to any length.
- Spring Target connectors present a large flat surface for making tangent connections to our standard .019" dia spring pin plungers. The target connectors provide an excellent gold plated conductive path back to the board mounted spring pin connector.
- Target connectors use MM #1933 and #1935 pins. See page 180 for details.
- Insulators are high temp. thermoplastic.

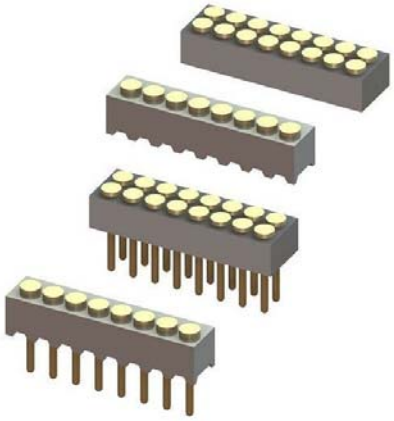

## Ordering Information

| | | |
|---|---|---|
| **Fig. 1** | **Series 856...051** | **Standard Solder Tails** |
| | 856-10-0_ _-10-051000 | |
| | **Specify # of pins** → | 01-20 |
| **Fig. 2** | **Series 856...051** | **Surface Mount** |
| | 856-10-0_ _-30-051000 | |
| | **Specify # of pins** → | 02-20 |
| **Fig. 3** | **Series 857...051** | **Standard Solder Tails** |
| | 857-10-0_ _-10-051000 | |
| | **Specify # of pins** → | 04-40 |
| **Fig. 4** | **Series 857...051** | **Surface Mount** |
| | 857-10-0_ _-30-051000 | |
| | **Specify # of pins** → | 04-40 |

*For Electrical, Mechanical & Enviromental Data, See pg. 4*

RoHS 2002/95/EC

| | | | | |
|---|---|---|---|---|
| PLATING CODE = | **10** | | | |
| Pin Plating | 10 µ" Au | | | |

## 0900-0

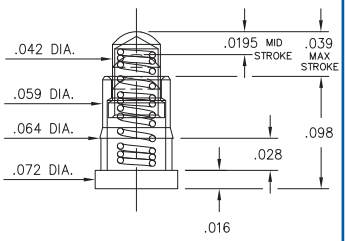


**0900-0-00-00-00-00-11-0**
Short Stroke, Surface mount
Lowest profile

## 0900-1⇒4

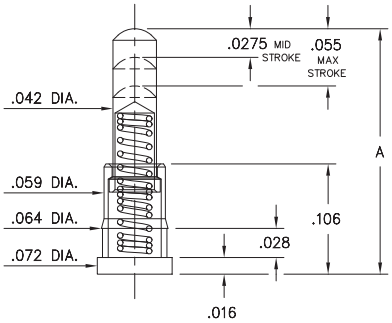


| Basic Part Number | Length A |
|---|---|
| 0900-1 | .177 |
| 0900-2 | .197 |
| 0900-3 | .217 |
| 0900-4 | .236 |

**0900-X-00-00-00-00-11-0**
Standard Stroke, Surface mount
Low profile

## 0934

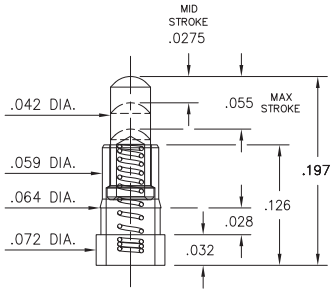


**0934-0-15-20-74-14-26-0**
Standard Stroke
Surface mount

## 0936

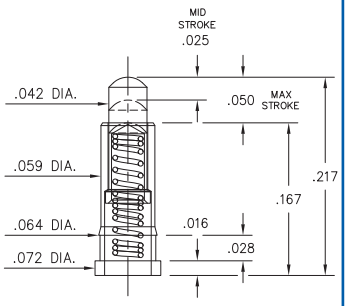


**0936-0-15-20-75-14-11-0**
Standard Stroke
Surface mount

## 0928

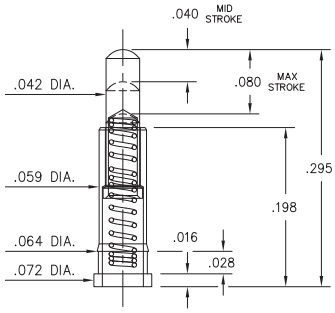


**0928-0-15-20-77-14-11-0**
Long Stroke
Surface mount

## 0907-0⇒9

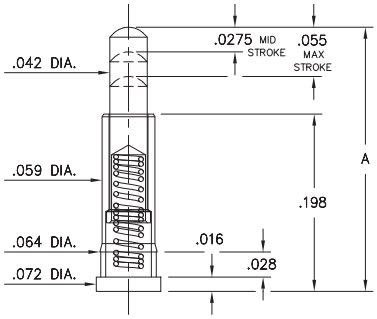


| Basic Part Number | Length A |
|---|---|
| 0907-0 | .255 |
| 0907-1 | .275 |
| 0907-2 | .295 |
| 0907-3 | .315 |
| 0907-4 | .335 |
| 0907-5 | .350 |
| 0907-6 | .370 |
| 0907-7 | .390 |
| 0907-8 | .410 |
| 0907-9 | .430 |

**0907-X-15-20-75-14-11-0**
Standard Stroke, Surface mount
High profile

## 0913

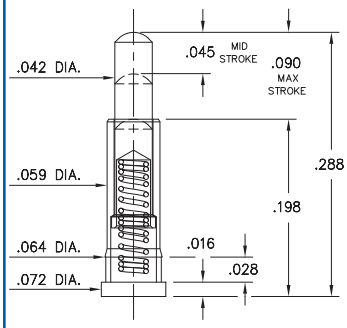


**0913-0-15-20-77-14-11-0**
Long Stroke
Surface mount

## 0925

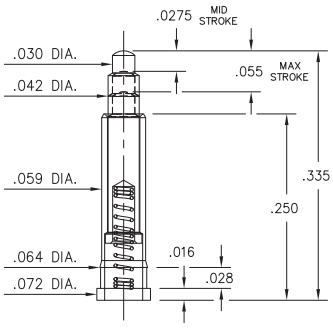


**0925-0-15-20-73-14-26-0**
Standard Stroke
Surface mount

## 0927

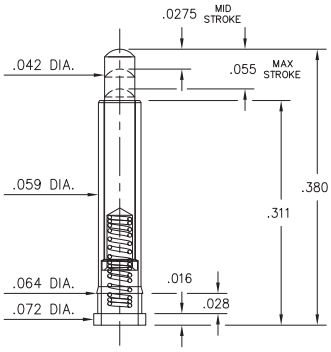


**0927-0-15-20-75-14-11-0**
Standard Stroke
Surface mount

## 0905

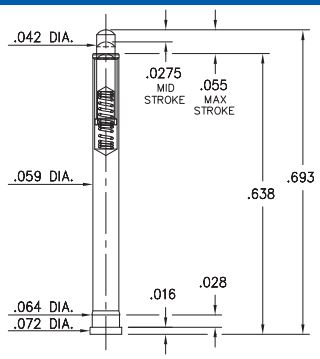


**0905-0-00-00-00-00-11-0**
Standard Stroke, Surface mount
Highest Profile

**ORDER CODE: 09XX - X - 15 - 20 - 7X - 14 - XX - 0**

**Spring Number**

### MATERIAL SPECIFICATIONS:

**SLEEVE & PLUNGER MATERIAL:** Copper Alloy
**SPRING MATERIAL:** Beryllium Copper
**SLEEVE & PLUNGER FINISH:** 20 µ" Gold over Nickel
**SPRING FINISH:** 10 µ" Gold over Nickel
**DIMENSION IN INCHES:**
**TOLERANCES ON:** LENGTHS: ±.006
DIAMETERS: ±.002
ANGLES: ± 2°

RoHS 2002/95/EC

### MECHANICAL & ELECTRICAL SPECIFICATIONS:

**DURABILITY:** 1,000,000 cycles
**CURRENT RATING:** 2A continuous, 3A peak
**CONTACT RESISTANCE:** 20 mΩ max.

| SPRING NUMBER | Mid. STROKE | Max. STROKE | FORCE @ Mid. Stroke | Initial Force (Pre-load) |
|---|---|---|---|---|
| 73 | .0275 | .055 | 60 g | 25 g |
| 74 | .0275 | .055 | 50 g | 15 g |
| 75 | .0275 | .055 | 60 g | 25 g |
| 77 | .045 | .090 | 60 g | 25 g |

**73, 74, 75, 77 Springs are not Interchangeable**

## 0906-0

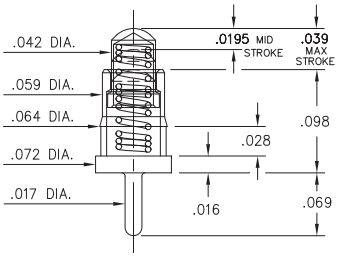


**0906-0-15-20-76-14-11-0**
Short Stroke
Solder mount in .018 min. mounting hole

## 0906-1⇒4

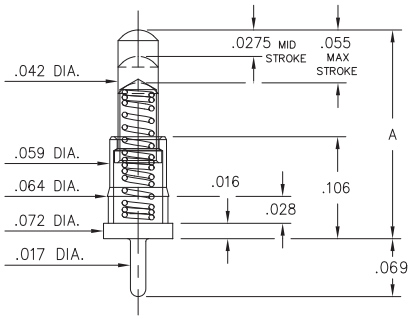


| Basic Part Number | Length A |
|---|---|
| 0906-1 | .177 |
| 0906-2 | .197 |
| 0906-3 | .217 |
| 0906-4 | .236 |

**0906-X-15-20-75-14-11-0**
Standard Stroke
Solder mount in .018 min. mounting hole

## 0930

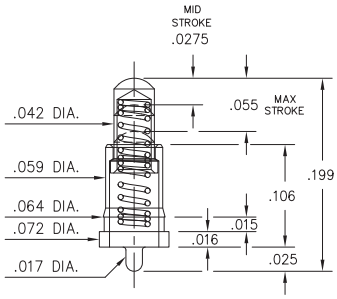


**0930-0-15-20-75-14-11-0**
Standard Stroke
Solder Mount in .018 min. mounting hole

## 0914

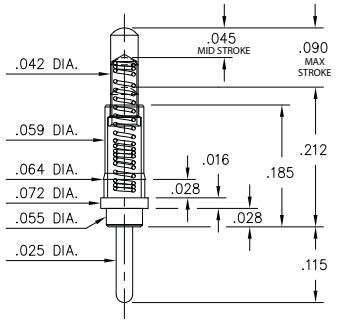


**0914-0-15-20-77-14-11-0**
Long Stroke
Solder mount in .027 min. mounting hole

## 0932

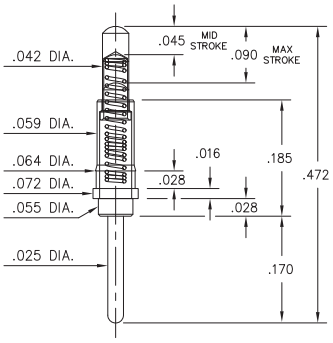


**0932-0-15-20-77-14-11-0**
Long Stroke
Solder Mount in .027 min. mounting hole

## 0908-0⇒9

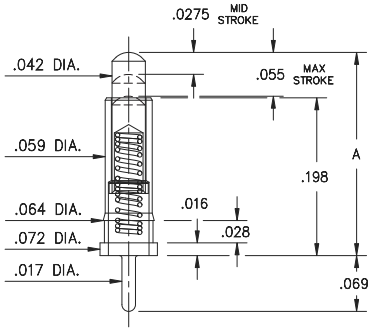


| Basic Part Number | Length A |
|---|---|
| 0908-0 | .255 |
| 0908-1 | .275 |
| 0908-2 | .295 |
| 0908-3 | .315 |
| 0908-4 | .335 |
| 0908-5 | .350 |
| 0908-6 | .370 |
| 0908-7 | .390 |
| 0908-8 | .410 |
| 0908-9 | .430 |

**0908-X-15-20-75-14-11-0**
Standard Stroke
Solder mount in .018 min. mounting hole

## 0901

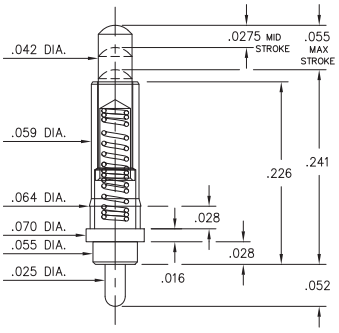


**0901-0-00-00-00-00-11-0**
Standard Stroke
Solder mount in .027 min. mounting hole

## 0929

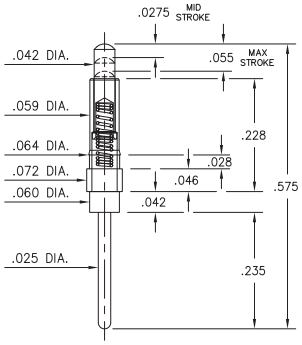


**0929-0-15-20-75-14-11-0**
Standard Stroke
Solder Mount in .027 min. mounting Hole

## 0922

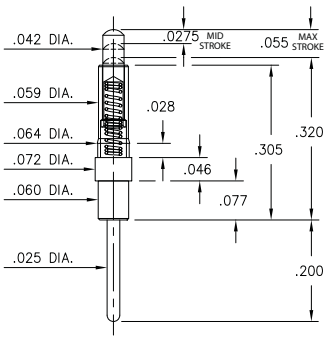


**0922-0-15-20-75-14-11-0**
Standard Stroke
Solder mount in .027 min. mounting hole

## 0980

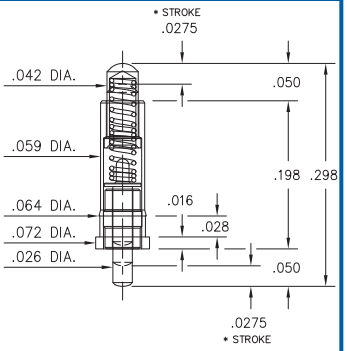


**0980-0-15-20-75-14-11-0**
Double action, *.055 Combined Stroke
Mount between parallel circuit boards

**ORDER CODE: 09XX - X - 15 - 20 - 7X - 14 - 11 - 0**

**Spring Number**

### MATERIAL SPECIFICATIONS:

**SLEEVE & PLUNGER MATERIAL:** Copper Alloy
**SPRING MATERIAL:** Beryllium Copper
**SLEEVE & PLUNGER FINISH:** 20 µ" Gold over Nickel
**SPRING FINISH:** 10 µ" Gold over Nickel
**DIMENSION IN INCHES:**
**TOLERANCES ON:** LENGTHS: ±.006
DIAMETERS: ±.002
ANGLES: ± 2°

RoHS 2002/95/EC

### MECHANICAL & ELECTRICAL SPECIFICATIONS:

**DURABILITY:** 1,000,000 cycles
**CURRENT RATING:** 2A continuous, 3A peak
**CONTACT RESISTANCE:** 20 mΩ max.

| SPRING NUMBER | Mid. STROKE | Max. STROKE | FORCE @ Mid. Stroke | Initial Force (Pre-load) |
|---|---|---|---|---|
| 75 | .0275 | .055 | 60 g | 25 g |
| 76 | .0195 | .039 | 60 g | 25 g |
| 77 | .045 | .090 | 60 g | 25 g |

**75, 76, 77 Springs are not Interchangeable**

## 0910-0

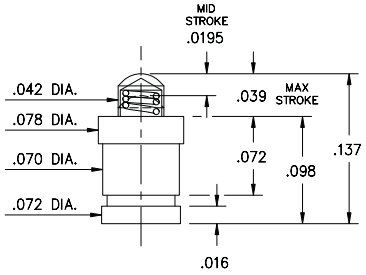


**0910-0-57-20-76-14-11-0**
Short Stroke, Surface mount
Packaged on 16mm wide carrier tape: 1,500 parts per 13" reel.

## 0910-1⇒4

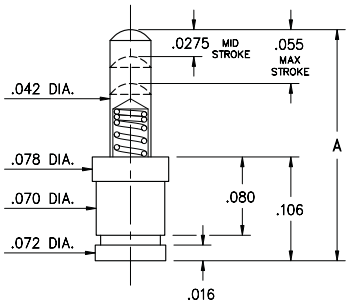


**0910-X-57-20-75-14-11-0**
Standard Stroke, Surface mount
Packaged on carrier tape.
See chart for tape width and qty. per reel

| Basic Part Number | Length A |
|---|---|
| 0910-1 | .177 |
| 0910-2 | .197 |
| 0910-3 | .217 |
| 0910-4 | .236 |

| Basic Part Number | Tape Width | Quantity per Reel |
|---|---|---|
| 0910-1 | 16mm | 1,500 |
| 0910-2 | 24mm | 1,100 |
| 0910-3 | 24mm | 1,100 |
| 0910-4 | 24mm | 1,100 |

## 0967

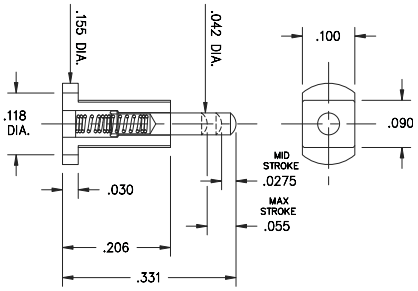


**0967-0-15-20-75-14-11-0**
Standard Stroke, Horizontal Surface mount
Also available on 16mm wide carrier tape: 2,200 parts per 13" reel.
Order as: 0967-0-58-20-75-14-11-0

*P.C.B. Layout*

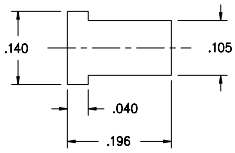


## 0990-0

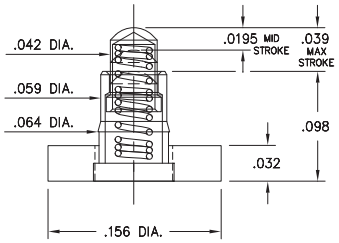


**0990-0-50-20-76-14-11-0**
Short Stroke, Surface mount
Large Base

## 0990-1⇒4

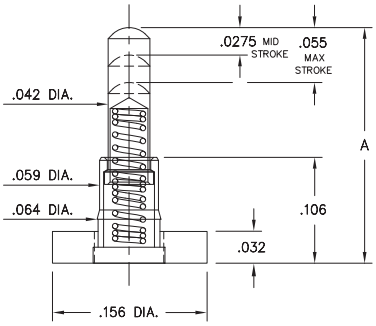


| Basic Part Number | Length A |
|---|---|
| 0990-1 | .177 |
| 0990-2 | .197 |
| 0990-3 | .217 |
| 0990-4 | .236 |

**0990-X-50-20-75-14-11-0**
Standard Stroke, Surface mount
Large Base

## 0997-0⇒9

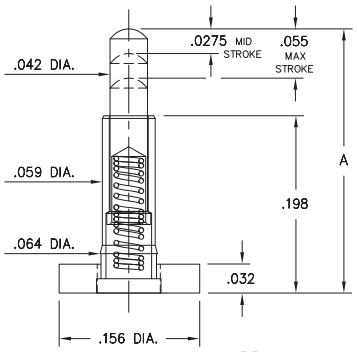


| Basic Part Number | Length A |
|---|---|
| 0997-0 | .255 |
| 0997-1 | .275 |
| 0997-2 | .295 |
| 0997-3 | .315 |
| 0997-4 | .335 |
| 0997-5 | .350 |
| 0997-6 | .370 |
| 0997-7 | .390 |
| 0997-8 | .410 |
| 0997-9 | .430 |

**0997-X-50-20-75-14-11-0**
Standard Stroke, Surface mount
Large Base

**ORDER CODE: 09XX - X - XX - 20 - 7X - 14 - 11 - 0**

**Spring Number**

**MATERIAL SPECIFICATIONS:**

**SLEEVE & PLUNGER MATERIAL:** Copper Alloy
**SPRING MATERIAL:** Beryllium Copper
**SLEEVE & PLUNGER FINISH:** 20 µ" Gold over Nickel
**SPRING FINISH:** 10 µ" Gold over Nickel
**DIMENSION IN INCHES:**
**TOLERANCES ON:** LENGTHS: ±.006
DIAMETERS: ±.002
ANGLES: ± 2°

RoHS 2002/95/EC

**MECHANICAL & ELECTRICAL SPECIFICATIONS:**

**DURABILITY:** 1,000,000 cycles
**CURRENT RATING:** 2A continuous, 3A peak
**CONTACT RESISTANCE:** 20 mΩ max.

| SPRING NUMBER | Mid. STROKE | Max. STROKE | FORCE @ Mid. Stroke | Initial Force (Pre-load) |
|---|---|---|---|---|
| 75 | .0275 | .055 | 60 g | 25 g |
| 76 | .0195 | .039 | 60 g | 25 g |

**75 & 76 Springs are not Interchangeable**

## 0950

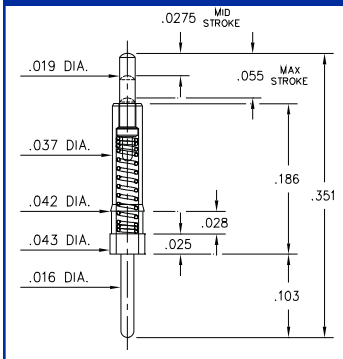


**0950-0-15-20-71-14-11-0**
Standard Stroke
Solder Mount in .018 min. mounting hole

## 0951

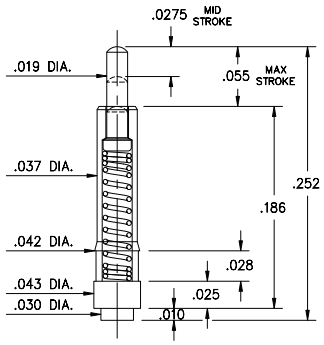


**0951-0-15-20-71-14-11-0**
Standard Stroke, Surface mount
High profile

## 0933

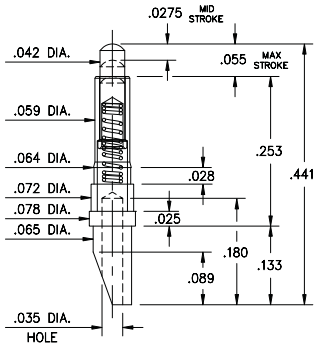


**0933-0-15-20-75-14-11-0**
Standard Stroke, SolderCup
For Wire Termination

## 0962

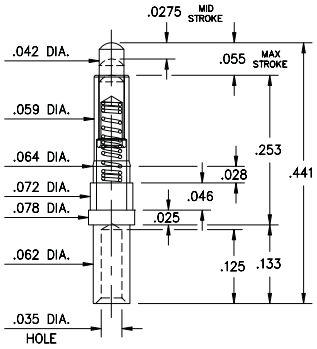


**0962-0-15-20-75-14-11-0**
Standard Stroke, Crimp Barrel
For Wire Termination

**ORDER CODE: 09XX - X - 15 - 20 - 7X - 14 - 11 - 0**

**Spring Number**

**MATERIAL SPECIFICATIONS:**

**SLEEVE & PLUNGER MATERIAL:** Copper Alloy
**SPRING MATERIAL:** Beryllium Copper
**SLEEVE & PLUNGER FINISH:** 20 µ" Gold over Nickel
**SPRING FINISH:** 10 µ" Gold over Nickel
**DIMENSION IN INCHES:**
**TOLERANCES ON:** LENGTHS: ±.006
DIAMETERS: ±.002
ANGLES: ± 2°

RoHS 2002/95/EC

**MECHANICAL & ELECTRICAL SPECIFICATIONS:**

**DURABILITY:** 1,000,000 cycles
**CURRENT RATING:** 2A continuous, 3A peak
**CONTACT RESISTANCE:** 20 mΩ max.

| SPRING NUMBER | Mid. STROKE | Max. STROKE | FORCE @ Mid. Stroke | Initial Force (Pre-load) |
|---|---|---|---|---|
| 71 | .0275 | .055 | 50 g | 15 g |
| 75 | .0275 | .055 | 60 g | 25 g |

**Springs are not Interchangeable**

## 0850

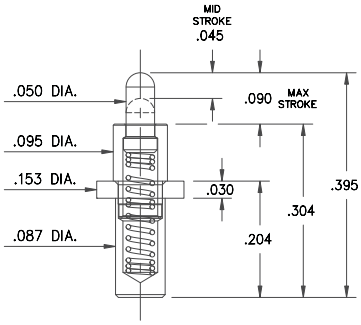


**0850-0-15-20-83-14-11-0**
Power Spring Pin
Solder Mount in .090 min. mounting hole

## Specifications for #0850-0 & #0852-0:

**Material:**
- Sleeve & Plunger Material: Copper Alloy
- Spring Material: Stainless Steel 302.

**Mechanical Characteristics:**
- Force @ mid-stroke (.045") = 120 grams
- Maximum stroke length = .090"
- Mechanical life: 1,000,000 cycles

**Electrical Characteristics:**
- Rated Current (Free air): Continuous 9 amps @ 10° C temperature rise.

## 0852

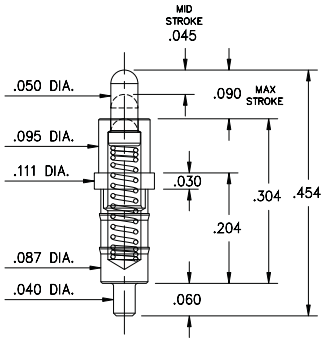


**0852-0-15-20-83-14-11-0**
Power Spring Pin
Solder Mount in .043 min. mounting hole

## 0851

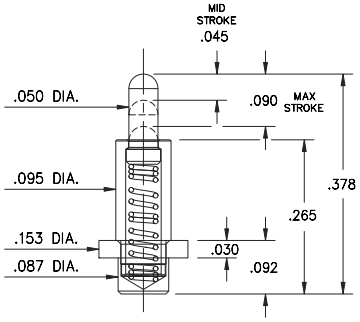


**0851-0-15-20-82-14-11-0**
Power Spring Pin
Solder Mount in .090 min. mounting hole

## Specifications for #0851-0 & #0853-0:

**Material:**
- Sleeve & Plunger Material: Copper Alloy
- Spring Material: Stainless Steel 302.

**Mechanical Characteristics:**
- Force @ mid-stroke (.045") = 120 grams
- Maximum stroke length = .090"
- Mechanical life: 1,000,000 cycles

**Electrical Characteristics:**
- Rated Current (Free air): Continuous 9 amps @ 10° C temperature rise.

## 0853

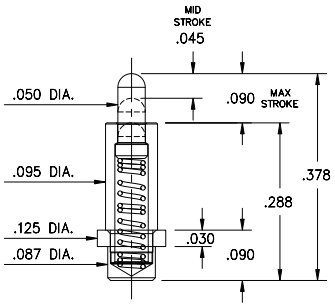


**0853-0-15-20-82-14-11-0**
Power Spring Pin
Solder Mount in .090 min. mounting hole

**ORDER CODE: 085X - X - 15 - 20 - 8X - 14 - 11 - 0**

**Spring Number**

### MATERIAL SPECIFICATIONS:

**SLEEVE & PLUNGER MATERIAL:** Copper Alloy
**SPRING MATERIAL:** Stainless Steel 302
**SLEEVE & PLUNGER FINISH:** 20 µ" Gold over Nickel
**SPRING FINISH:** 10 µ' Gold over Nickel
**DIMENSION IN INCHES:**
**TOLERANCES ON:** LENGTHS: ±.006
DIAMETERS: ±.002
ANGLES: ± 2°

RoHS 2002/95/EC

### MECHANICAL & ELECTRICAL SPECIFICATIONS:

**DURABILITY:** 1,000,000 cycles
**Rated Current (Free air):** Continuous 9 amps @ 10° C temperature rise
**CONTACT RESISTANCE:** 20 mΩ max.

| SPRING NUMBER | Mid. STROKE | Max. STROKE | FORCE @ Mid. Stroke | Initial Force (Pre-load) |
|---|---|---|---|---|
| 82 | .045 | .090 | 120 g | 25 g |
| 83 | .045 | .090 | 120 g | 25 g |

**82 & 83 Springs are not Interchangeable**

# DIP SOCKETS, CARRIERS AND HEADERS
# QUICK SELECTOR CHART

***USE THIS CONVENIENT CHART TO SELECT THE RIGHT DIP PRODUCT FOR YOUR APPLICATION.***

1) Determine the style of pin needed to meet your requirement.
2) Select the appropriate insulator frame and grid spacing.
3) Turn to indicated page for detail and ordering information.
4) * denotes pins that Mill-Max will custom assemble in a selected insulator. Contact our applications engineers for further information.

## *DUAL-IN-LINE SOCKETS AND CARRIERS*

| SELECT PIN → / SELECT INSULATOR ↓ / TURN TO PAGE # ↘ | Standard Solder Tail | Clinch Pin | Long Solder Tail | Very Low Profile | Ultra Low Profile | Auto-Insertion | Solderless Press-Fit | Surface Mount: Gull-Wing | Surface Mount: Stub Tail | 1-4 Level Wrapost | Pluggable Wrapost | Elevated | Right Angle | Socket Carriers: Solder Tail | Socket Carriers: Low Profile | Socket Carriers: Ultra Low Profile |
|---|---|---|---|---|---|---|---|---|---|---|---|---|---|---|---|---|
| *OPEN FRAME DIP* | 22<br>32 | 27 | 23 | 24 | 25 | 26 | 28<br>29 | 36 | 38<br>39 | 41 | 42 | 43 | | 44 | 45<br>46 | 47 |
| *CAPACITOR DIP* | 30 | | | | | | | | | 30 | | | | | | |
| *CLOSED FRAME DIP* | 31<br>33 | | * | * | | * | * | 37 | 40 | 31<br>34 | * | * | 61 | * | * | * |

For Shrink DIP Sockets (on .070" grid), see page 57 - 60

For Technical Specifications, see page 4.

## *DUAL-IN-LINE HEADERS*

| SELECT PIN → / SELECT INSULATOR ↓ / TURN TO PAGE # ↘ | .018 Dia. Solder Tail & Wrapost | Slotted Head Solder Tail & Wrapost | Turret Head Solder Tail & Wrapost | Solder Cup Solder Tail & Wrapost | Elevated Pin to Pin | Gull Wing Surface Mount |
|---|---|---|---|---|---|---|
| *OPEN FRAME DIP* | 48 | 49 | 50 | 51 | 52 54<br>53 55 | 56 |

# DUAL-IN-LINE INSULATORS
## Standard Open Frame

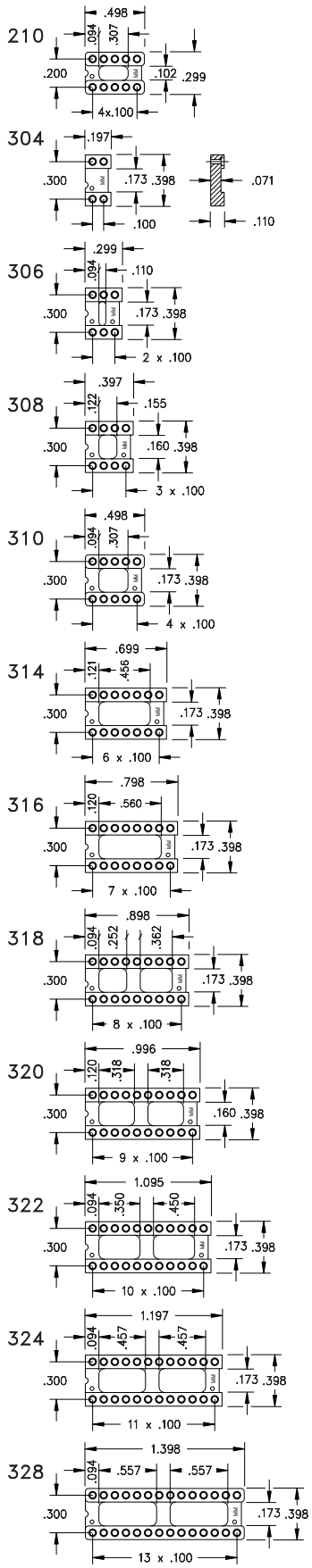


Example Part Number: 314
3 = .300" row to row spacing
14 = 14 total positions

Open frame insulators 320, 624, 628, 632 and 640 are available on special request without center bars. Order number same as corresponding socket or pin header but with suffix 050 added.

Example:
110-93-628-41-001000 standard
110-93-628-41-001050 without center bar.

Standard material for open frame insulators is a High temp. PCT. This is used for traditional wave and hand soldering. This plastic has a heat deflection temperature of 255°C (491°F) and is suitable for all types of reflow soldering including "lead-free".

# DUAL-IN-LINE INSULATORS
## Standard, Closed Frame
## Ultra Low Profile, Open Frame

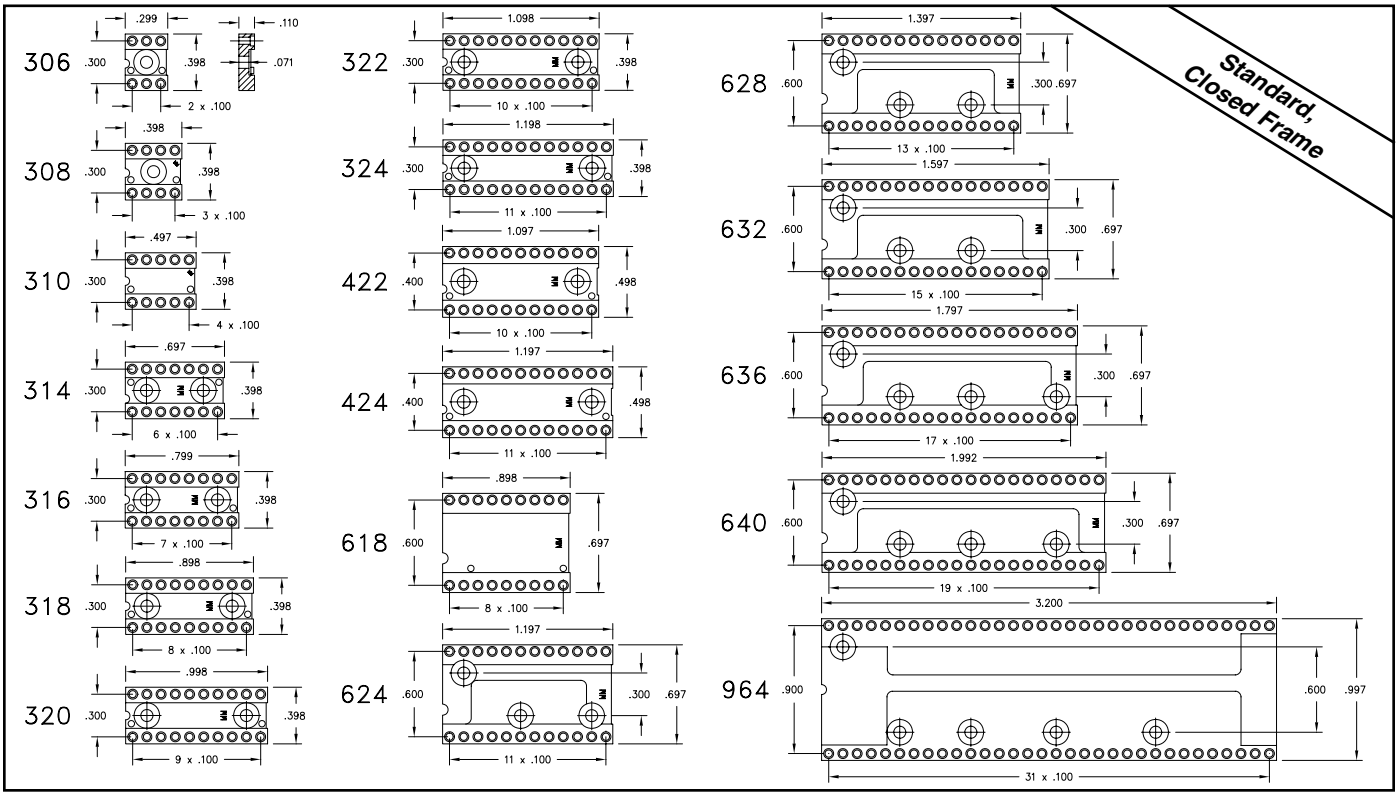


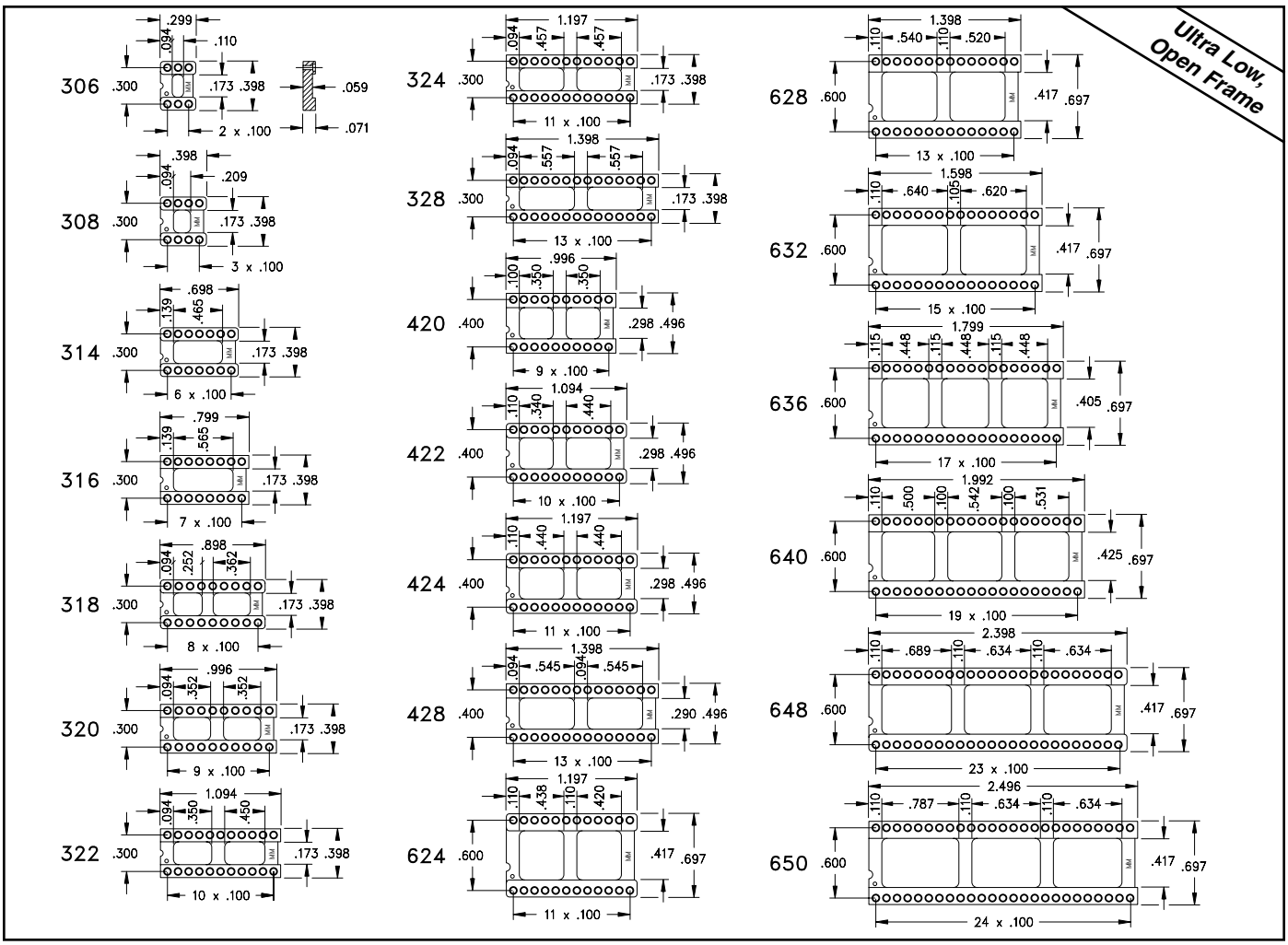

# DUAL-IN-LINE INSULATORS
## Shrink DIP, Open and Closed Frame
## Automatic Insertion, Open Frame

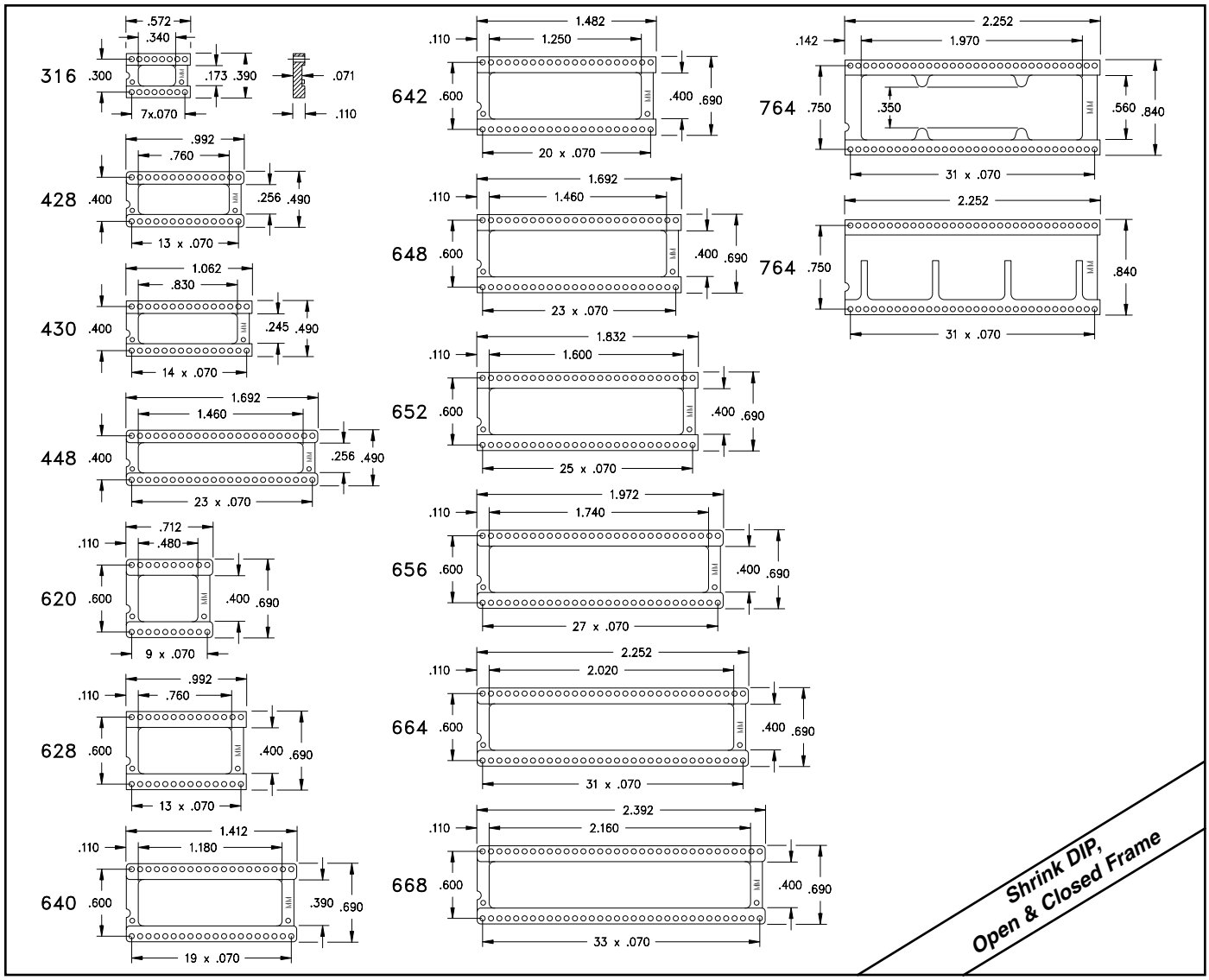


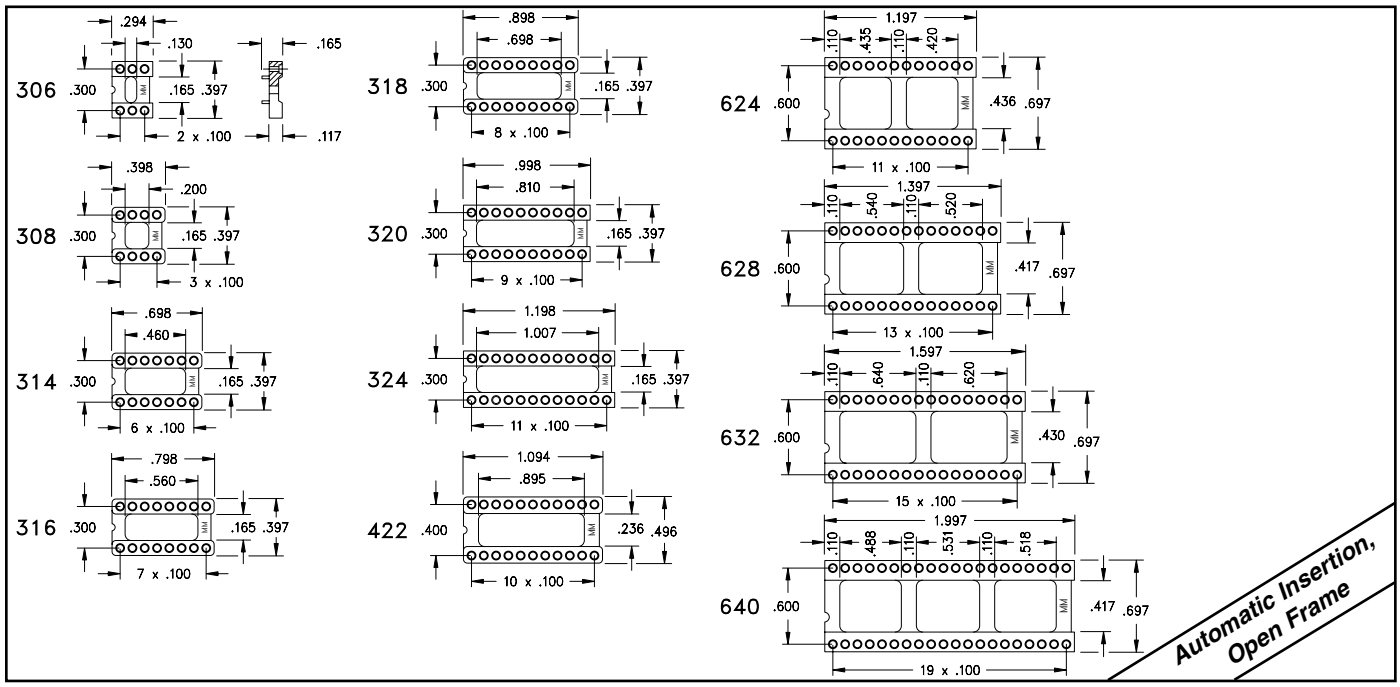

# DUAL-IN-LINE SOCKETS
## Standard Solder Tail
## Open Frame

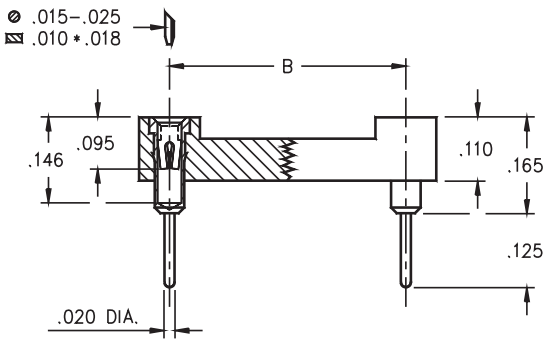


- All DIP sockets accept .015" - .025" diameter & standard IC leads.
- Hi-Rel, 4-finger BeCu #30 contact is rated at 3 amps. See page 218 for details.
- Series 110 sockets use MM #1001 pins. See page 136 for details.
- Insulators are high temp. thermoplastic.

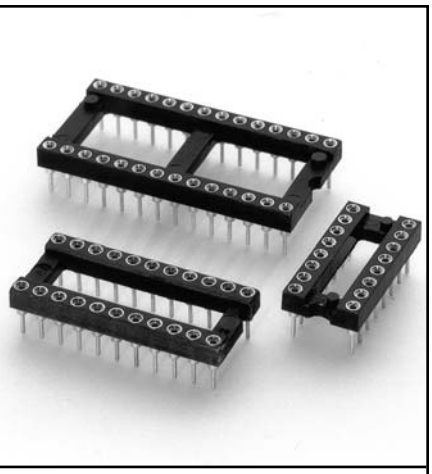

## Ordering Information

| Total number of pins | A | B | C | Quantity per tube | Ordering Information |
|---|---|---|---|---|---|
| 10 | 0.5 | 0.2 | 0.3 | 40 | 110-XX-210-41-001000 |
| 4 | 0.2 | 0.3 | 0.4 | 102 | 110-XX-304-41-001000 |
| 6 | 0.3 | 0.3 | 0.4 | 67 | 110-XX-306-41-001000 |
| 8 | 0.4 | 0.3 | 0.4 | 50 | 110-XX-308-41-001000 |
| 10 | 0.5 | 0.3 | 0.4 | 40 | 110-XX-310-41-001000 |
| 14 | 0.7 | 0.3 | 0.4 | 28 | 110-XX-314-41-001000 |
| 16 | 0.8 | 0.3 | 0.4 | 25 | 110-XX-316-41-001000 |
| 18 | 0.9 | 0.3 | 0.4 | 22 | 110-XX-318-41-001000 |
| 20 | 1.0 | 0.3 | 0.4 | 20 | 110-XX-320-41-001000 |
| 22 | 1.1 | 0.3 | 0.4 | 18 | 110-XX-322-41-001000 |
| 24 | 1.2 | 0.3 | 0.4 | 16 | 110-XX-324-41-001000 |
| 28 | 1.4 | 0.3 | 0.4 | 14 | 110-XX-328-41-001000 |
| 20 | 1.0 | 0.4 | 0.5 | 20 | 110-XX-420-41-001000 |
| 22 | 1.1 | 0.4 | 0.5 | 18 | 110-XX-422-41-001000 |
| 24 | 1.2 | 0.4 | 0.5 | 16 | 110-XX-424-41-001000 |
| 28 | 1.4 | 0.4 | 0.5 | 14 | 110-XX-428-41-001000 |
| 32 | 1.6 | 0.4 | 0.5 | 12 | 110-XX-432-41-001000 |
| 24 | 1.2 | 0.6 | 0.7 | 16 | 110-XX-624-41-001000 |
| 28 | 1.4 | 0.6 | 0.7 | 14 | 110-XX-628-41-001000 |
| 32 | 1.6 | 0.6 | 0.7 | 12 | 110-XX-632-41-001000 |
| 36 | 1.8 | 0.6 | 0.7 | 11 | 110-XX-636-41-001000 |
| 40 | 2.0 | 0.6 | 0.7 | 10 | 110-XX-640-41-001000 |
| 42 | 2.1 | 0.6 | 0.7 | 9 | 110-XX-642-41-001000 |
| 48 | 2.4 | 0.6 | 0.7 | 8 | 110-XX-648-41-001000 |
| 50 | 2.5 | 0.6 | 0.7 | 8 | 110-XX-650-41-001000 |
| 52 | 2.6 | 0.6 | 0.7 | 7 | 110-XX-652-41-001000 |
| 50 | 2.5 | 0.9 | 1.0 | 8 | 110-XX-950-41-001000 |
| 52 | 2.6 | 0.9 | 1.0 | 7 | 110-XX-952-41-001000 |
| 64 | 3.2 | 0.9 | 1.0 | 6 | 110-XX-964-41-001000 |

RoHS 2002/95/EC

*For RoHS compliance select ◇ plating code.*

*For Electrical, Mechanical & Enviromental Data, See pg. 4*

*XX=Plating Code See Below*

| SPECIFY PLATING CODE XX= | 13◇ | 91 | 93 | 99 | 41◇ | 43◇ | 44◇ |
|---|---|---|---|---|---|---|---|
| Sleeve (Pin) | 10μ" Au | 200μ" Sn/Pb | 200μ" Sn/Pb | 200μ" Sn/Pb | 200μ" Sn | 200μ" Sn | 200μ" Sn |
| Contact (Clip) | 30μ" Au | 10μ" Au | 30μ" Au | 200μ" Sn/Pb | 10μ" Au | 30μ" Au | 200μ" Sn |

# DUAL-IN-LINE SOCKETS
## Long Solder Tail for Multilayer PC-Boards
## Open Frame

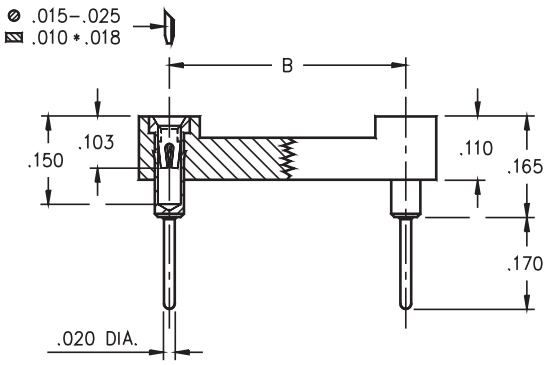


- DIP sockets with increased solder tail length of .170", allowing application on multi-layer PCBs up to .139" thick. Other lengths available upon request.
- Hi-Rel, 4-finger BeCu #30 contact is rated at 3 amps. See page 218 for details.
- Series 111 use MM #0134 pins. See page 136 for details.
- Insulators are high temperature thermoplastic.

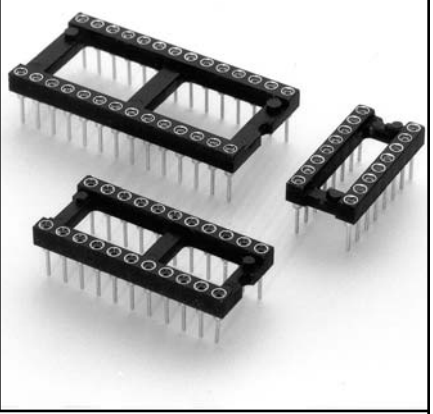

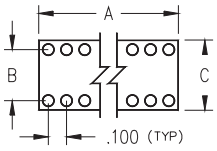


| Total number of pins | A | B | C | Quantity per tube | Ordering Information |
|---|---|---|---|---|---|
| 10 | 0.5 | 0.2 | 0.3 | 40 | 111-XX-210-41-001000 |
| 4 | 0.2 | 0.3 | 0.4 | 102 | 111-XX-304-41-001000 |
| 6 | 0.3 | 0.3 | 0.4 | 67 | 111-XX-306-41-001000 |
| 8 | 0.4 | 0.3 | 0.4 | 50 | 111-XX-308-41-001000 |
| 10 | 0.5 | 0.3 | 0.4 | 40 | 111-XX-310-41-001000 |
| 14 | 0.7 | 0.3 | 0.4 | 28 | 111-XX-314-41-001000 |
| 16 | 0.8 | 0.3 | 0.4 | 25 | 111-XX-316-41-001000 |
| 18 | 0.9 | 0.3 | 0.4 | 22 | 111-XX-318-41-001000 |
| 20 | 1.0 | 0.3 | 0.4 | 20 | 111-XX-320-41-001000 |
| 22 | 1.1 | 0.3 | 0.4 | 18 | 111-XX-322-41-001000 |
| 24 | 1.2 | 0.3 | 0.4 | 16 | 111-XX-324-41-001000 |
| 28 | 1.4 | 0.3 | 0.4 | 14 | 111-XX-328-41-001000 |
| 20 | 1.0 | 0.4 | 0.5 | 20 | 111-XX-420-41-001000 |
| 22 | 1.1 | 0.4 | 0.5 | 18 | 111-XX-422-41-001000 |
| 24 | 1.2 | 0.4 | 0.5 | 16 | 111-XX-424-41-001000 |
| 28 | 1.4 | 0.4 | 0.5 | 14 | 111-XX-428-41-001000 |
| 32 | 1.6 | 0.4 | 0.5 | 12 | 111-XX-432-41-001000 |
| 24 | 1.2 | 0.6 | 0.7 | 16 | 111-XX-624-41-001000 |
| 28 | 1.4 | 0.6 | 0.7 | 14 | 111-XX-628-41-001000 |
| 32 | 1.6 | 0.6 | 0.7 | 12 | 111-XX-632-41-001000 |
| 36 | 1.8 | 0.6 | 0.7 | 11 | 111-XX-636-41-001000 |
| 40 | 2.0 | 0.6 | 0.7 | 10 | 111-XX-640-41-001000 |
| 42 | 2.1 | 0.6 | 0.7 | 9 | 111-XX-642-41-001000 |
| 48 | 2.4 | 0.6 | 0.7 | 8 | 111-XX-648-41-001000 |
| 50 | 2.5 | 0.6 | 0.7 | 8 | 111-XX-650-41-001000 |
| 52 | 2.6 | 0.6 | 0.7 | 7 | 111-XX-652-41-001000 |
| 50 | 2.5 | 0.9 | 1.0 | 8 | 111-XX-950-41-001000 |
| 52 | 2.6 | 0.9 | 1.0 | 7 | 111-XX-952-41-001000 |
| 64 | 3.2 | 0.9 | 1.0 | 6 | 111-XX-964-41-001000 |

RoHS 2002/95/EC

*For RoHS compliance select ◇ plating code.*

*For Electrical, Mechanical & Enviromental Data, See pg. 4*

*XX=Plating Code See Below*

| SPECIFY PLATING CODE XX= | | | 93 | | | 43◇ | |
|---|---|---|---|---|---|---|---|
| Sleeve (Pin) | | | 200μ" Sn/Pb | | | 200μ" Sn | |
| Contact (Clip) | | | 30μ" Au | | | 30μ" Au | |

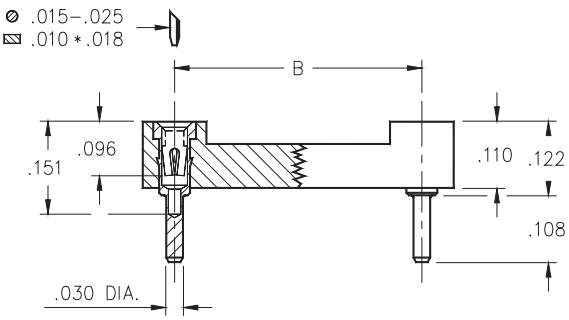


- Low profile DIP socket, sits only .122" above the PCB.
- Hi-Rel, 4-finger BeCu #30 contact is rated at 3 amps. See page 218 for details.
- Series 115 use MM #0501 pins. See page 133 for details.
- Insulators are high temperature thermoplastic.

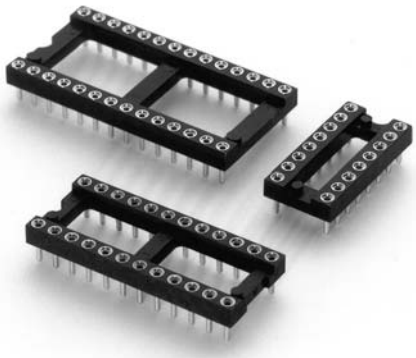

## Ordering Information

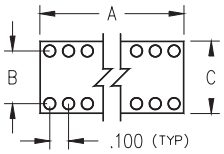


| Total number of pins | A | B | C | Quantity per tube | Ordering Information |
|---|---|---|---|---|---|
| 10 | 0.5 | 0.2 | 0.3 | 41 | 115-XX-210-41-001000 |
| 4 | 0.2 | 0.3 | 0.4 | 102 | 115-XX-304-41-001000 |
| 6 | 0.3 | 0.3 | 0.4 | 67 | 115-XX-306-41-001000 |
| 8 | 0.4 | 0.3 | 0.4 | 50 | 115-XX-308-41-001000 |
| 10 | 0.5 | 0.3 | 0.4 | 40 | 115-XX-310-41-001000 |
| 14 | 0.7 | 0.3 | 0.4 | 28 | 115-XX-314-41-001000 |
| 16 | 0.8 | 0.3 | 0.4 | 25 | 115-XX-316-41-001000 |
| 18 | 0.9 | 0.3 | 0.4 | 22 | 115-XX-318-41-001000 |
| 20 | 1.0 | 0.3 | 0.4 | 20 | 115-XX-320-41-001000 |
| 22 | 1.1 | 0.3 | 0.4 | 18 | 115-XX-322-41-001000 |
| 24 | 1.2 | 0.3 | 0.4 | 16 | 115-XX-324-41-001000 |
| 28 | 1.4 | 0.3 | 0.4 | 14 | 115-XX-328-41-001000 |
| 20 | 1.0 | 0.4 | 0.5 | 20 | 115-XX-420-41-001000 |
| 22 | 1.1 | 0.4 | 0.5 | 18 | 115-XX-422-41-001000 |
| 24 | 1.2 | 0.4 | 0.5 | 16 | 115-XX-424-41-001000 |
| 28 | 1.4 | 0.4 | 0.5 | 14 | 115-XX-428-41-001000 |
| 32 | 1.6 | 0.4 | 0.5 | 12 | 115-XX-432-41-001000 |
| 24 | 1.2 | 0.6 | 0.7 | 16 | 115-XX-624-41-001000 |
| 28 | 1.4 | 0.6 | 0.7 | 14 | 115-XX-628-41-001000 |
| 32 | 1.6 | 0.6 | 0.7 | 12 | 115-XX-632-41-001000 |
| 36 | 1.8 | 0.6 | 0.7 | 11 | 115-XX-636-41-001000 |
| 40 | 2.0 | 0.6 | 0.7 | 10 | 115-XX-640-41-001000 |
| 42 | 2.1 | 0.6 | 0.7 | 9 | 115-XX-642-41-001000 |
| 48 | 2.4 | 0.6 | 0.7 | 8 | 115-XX-648-41-001000 |
| 50 | 2.5 | 0.6 | 0.7 | 8 | 115-XX-650-41-001000 |
| 52 | 2.6 | 0.6 | 0.7 | 7 | 115-XX-652-41-001000 |
| 50 | 2.5 | 0.9 | 1.0 | 8 | 115-XX-950-41-001000 |
| 52 | 2.6 | 0.9 | 1.0 | 7 | 115-XX-952-41-001000 |
| 64 | 3.2 | 0.9 | 1.0 | 6 | 115-XX-964-41-001000 |

RoHS 2002/95/EC

*For RoHS compliance select ◇ plating code.*

*For Electrical, Mechanical & Enviromental Data, See pg. 4*

*XX=Plating Code See Below*

| SPECIFY PLATING CODE XX= | | | 93 | | | 43◇ | |
|---|---|---|---|---|---|---|---|
| Sleeve (Pin) | | | 200µ" Sn/Pb | | | 200µ" Sn | |
| Contact (Clip) | | | 30µ" Au | | | 30µ" Au | |

# DUAL-IN-LINE SOCKETS
## Ultra Low Profile
## Open Frame

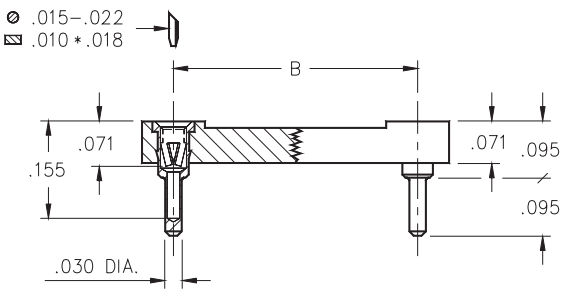


- Our lowest profile DIP socket with an above PCB height of only .095".
- Special short Hi-Rel, 4-finger BeCu #12 contact is rated at 3 amps. See page 218 for details.
- Series 115 use MM #1534 pins. See page 132 for details.
- Insulators are high temperature thermoplastic.

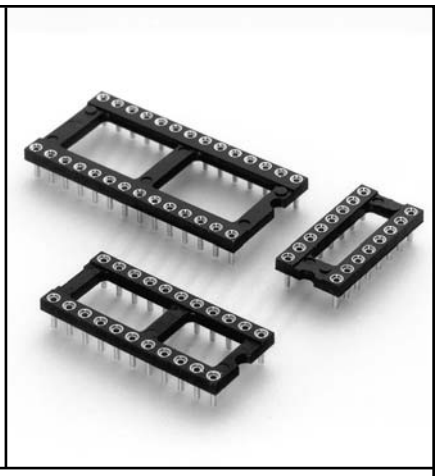

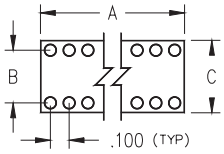


| Total number of pins | A | B | C | Quantity per tube | Ordering Information |
|---|---|---|---|---|---|
| 6 | 0.3 | 0.3 | 0.4 | 68 | 115-XX-306-41-003000 |
| 8 | 0.4 | 0.3 | 0.4 | 50 | 115-XX-308-41-003000 |
| 14 | 0.7 | 0.3 | 0.4 | 28 | 115-XX-314-41-003000 |
| 16 | 0.8 | 0.3 | 0.4 | 25 | 115-XX-316-41-003000 |
| 18 | 0.9 | 0.3 | 0.4 | 22 | 115-XX-318-41-003000 |
| 20 | 1.0 | 0.3 | 0.4 | 20 | 115-XX-320-41-003000 |
| 22 | 1.1 | 0.3 | 0.4 | 18 | 115-XX-322-41-003000 |
| 24 | 1.2 | 0.3 | 0.4 | 16 | 115-XX-324-41-003000 |
| 28 | 1.4 | 0.3 | 0.4 | 14 | 115-XX-328-41-003000 |
| 20 | 1.0 | 0.4 | 0.5 | 20 | 115-XX-420-41-003000 |
| 22 | 1.1 | 0.4 | 0.5 | 18 | 115-XX-422-41-003000 |
| 24 | 1.2 | 0.4 | 0.5 | 16 | 115-XX-424-41-003000 |
| 28 | 1.4 | 0.4 | 0.5 | 14 | 115-XX-428-41-003000 |
| 24 | 1.2 | 0.6 | 0.7 | 16 | 115-XX-624-41-003000 |
| 28 | 1.4 | 0.6 | 0.7 | 14 | 115-XX-628-41-003000 |
| 32 | 1.6 | 0.6 | 0.7 | 12 | 115-XX-632-41-003000 |
| 36 | 1.8 | 0.6 | 0.7 | 11 | 115-XX-636-41-003000 |
| 40 | 2.0 | 0.6 | 0.7 | 10 | 115-XX-640-41-003000 |
| 48 | 2.4 | 0.6 | 0.7 | 8 | 115-XX-648-41-003000 |
| 50 | 2.5 | 0.6 | 0.7 | 8 | 115-XX-650-41-003000 |

RoHS 2002/95/EC

*For RoHS compliance select ◇ plating code.*

*For Electrical, Mechanical & Enviromental Data, See pg. 4*

*XX=Plating Code See Below*

| SPECIFY PLATING CODE XX= | | | 93 | | | 43◇ | 44◇ |
|---|---|---|---|---|---|---|---|
| Sleeve (Pin) | | | 200µ" Sn/Pb | | | 200µ" Sn | 200µ" Sn |
| Contact (Clip) | | | 30µ" Au | | | 30µ" Au | 200µ" Sn |

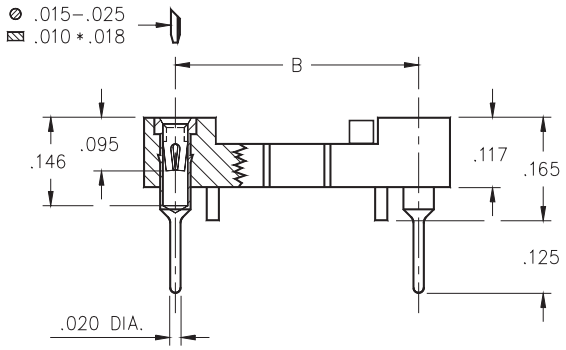


- High temperature thermo-plastic insulator with standoffs is compatible with standard automatic insertion equipment.
- Soft copper alloy machined pins allows clinching. Chamfered contact entry allows for ease of IC insertion without bent leads.
- Hi-Rel, 4-finger BeCu #30 contact is rated at 3 amps. See page 218 for details.
- Series 110 use MM #1005 pins. See page 137 for details.

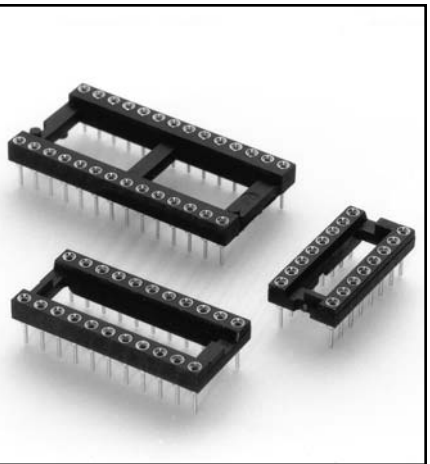

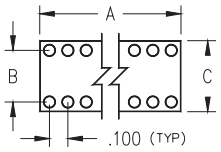


| Total number of pins | A | B | C | Quantity per tube | Ordering Information |
|---|---|---|---|---|---|
| 6 | 0.3 | 0.3 | 0.4 | 67 | 110-XX-306-41-605000 |
| 8 | 0.4 | 0.3 | 0.4 | 50 | 110-XX-308-41-605000 |
| 14 | 0.7 | 0.3 | 0.4 | 28 | 110-XX-314-41-605000 |
| 16 | 0.8 | 0.3 | 0.4 | 25 | 110-XX-316-41-605000 |
| 18 | 0.9 | 0.3 | 0.4 | 22 | 110-XX-318-41-605000 |
| 20 | 1.0 | 0.3 | 0.4 | 20 | 110-XX-320-41-605000 |
| 24 | 1.2 | 0.3 | 0.4 | 16 | 110-XX-324-41-605000 |
| 22 | 1.1 | 0.4 | 0.5 | 18 | 110-XX-422-41-605000 |
| 24 | 1.2 | 0.6 | 0.7 | 16 | 110-XX-624-41-605000 |
| 28 | 1.4 | 0.6 | 0.7 | 14 | 110-XX-628-41-605000 |
| 32 | 1.6 | 0.6 | 0.7 | 12 | 110-XX-632-41-605000 |
| 40 | 2.0 | 0.6 | 0.7 | 10 | 110-XX-640-41-605000 |

RoHS 2002/95/EC

*For RoHS compliance select ◇ plating code.*

*For Electrical, Mechanical & Enviromental Data, See pg. 4*

*XX=Plating Code See Below*

| SPECIFY PLATING CODE XX= | | | 93 | | | 43◇ | |
|---|---|---|---|---|---|---|---|
| Sleeve (Pin) | | | 200µ" Sn/Pb | | | 200µ" Sn | |
| Contact (Clip) | | | 30µ" Au | | | 30µ" Au | |

# DUAL-IN-LINE SOCKETS
## Clinch Pin
## Open Frame

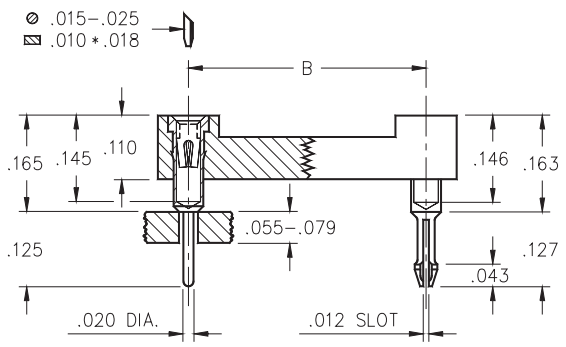


- Special lock-down feature prevents floating of socket during soldering. Open insulator with ladder construction.
- Sockets are XY stackable.
- Socket pins feature closed end construction eliminating any solder wicking problems.
- Series 101 use MM #1001 & MM #0156 pins. See page 136 for details.
- Insulators are high temperature thermoplastic.

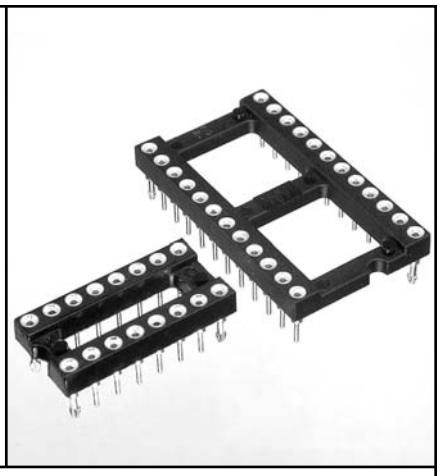

## Ordering Information

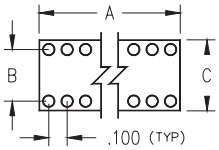


| Total number of pins | A | B | C | Quantity per tube | Ordering Information |
|---|---|---|---|---|---|
| 6 | 0.3 | 0.3 | 0.4 | 67 | 101-93-306-41-56X000 |
| 8 | 0.4 | 0.3 | 0.4 | 50 | 101-93-308-41-56X000 |
| 14 | 0.7 | 0.3 | 0.4 | 28 | 101-93-314-41-56X000 |
| 16 | 0.8 | 0.3 | 0.4 | 25 | 101-93-316-41-56X000 |
| 18 | 0.9 | 0.3 | 0.4 | 22 | 101-93-318-41-56X000 |
| 20 | 1.0 | 0.3 | 0.4 | 20 | 101-93-320-41-56X000 |
| 24 | 1.2 | 0.3 | 0.4 | 16 | 101-93-324-41-56X000 |
| 28 | 1.4 | 0.3 | 0.4 | 14 | 101-93-328-41-56X000 |
| 22 | 1.1 | 0.4 | 0.5 | 18 | 101-93-422-41-56X000 |
| 24 | 1.2 | 0.6 | 0.7 | 16 | 101-93-624-41-56X000 |
| 28 | 1.4 | 0.6 | 0.7 | 14 | 101-93-628-41-56X000 |
| 32 | 1.6 | 0.6 | 0.7 | 12 | 101-93-632-41-56X000 |
| 40 | 2.0 | 0.6 | 0.7 | 10 | 101-93-640-41-56X000 |
| 48 | 2.4 | 0.6 | 0.7 | 8 | 101-93-648-41-56X000 |
| 64 | 3.2 | 0.9 | 1.0 | 6 | 101-93-964-41-56X000 |

Clinch Pins:
Two Opposite Corner Pins **X = 0**
Four Corner Pins **X = 8**

RoHS 2002/95/EC

*For Electrical, Mechanical & Enviromental Data, See pg. 4*

*For RoHS compliance select ◇ plating code.*

| PLATING CODE = | | | 93 | | | | |
|---|---|---|---|---|---|---|---|
| Sleeve (Pin) | | | 200µ" Sn/Pb | | | | |
| Contact (Clip) | | | 30µ" Au | | | | |

# DUAL-IN-LINE SOCKETS
## Solderless Press-Fit
## Open Frame

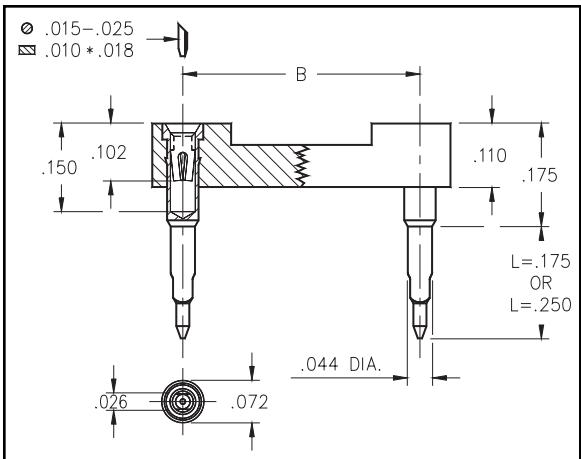


- Designed for solderless press-fit into plated thru-holes.
- Pin lengths are suitable for .062" and .093"-.125" thick panels.
- Required plated thru-hole is .036"-.041". Use a 1.1mm drill prior to plating.
- Series 104 use MM #0477 or MM #0478 pins with a BeCu #30 contact, rated at 3 amps. See page 133 for details.
- Insulators are high temperature thermoplastic.

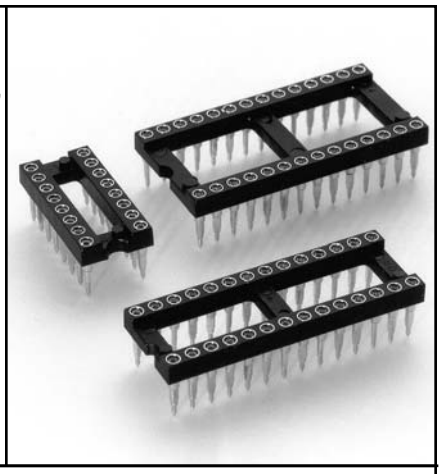

## Ordering Information

| Total number of pins | A | B | C | Quantity per tube | L = .175 (for .062 thick panel) | L = .250 (for .125 thick panel) |
|---|---|---|---|---|---|---|
| 10 | 0.5 | 0.2 | 0.3 | 40 | 104-13-210-41-770000 | 104-13-210-41-780000 |
| 4 | 0.2 | 0.3 | 0.4 | 102 | 104-13-304-41-770000 | 104-13-304-41-780000 |
| 6 | 0.3 | 0.3 | 0.4 | 67 | 104-13-306-41-770000 | 104-13-306-41-780000 |
| 8 | 0.4 | 0.3 | 0.4 | 50 | 104-13-308-41-770000 | 104-13-308-41-780000 |
| 10 | 0.5 | 0.3 | 0.4 | 40 | 104-13-310-41-770000 | 104-13-310-41-780000 |
| 14 | 0.7 | 0.3 | 0.4 | 28 | 104-13-314-41-770000 | 104-13-314-41-780000 |
| 16 | 0.8 | 0.3 | 0.4 | 25 | 104-13-316-41-770000 | 104-13-316-41-780000 |
| 18 | 0.9 | 0.3 | 0.4 | 22 | 104-13-318-41-770000 | 104-13-318-41-780000 |
| 20 | 1.0 | 0.3 | 0.4 | 20 | 104-13-320-41-770000 | 104-13-320-41-780000 |
| 22 | 1.1 | 0.3 | 0.4 | 18 | 104-13-322-41-770000 | 104-13-322-41-780000 |
| 24 | 1.2 | 0.3 | 0.4 | 16 | 104-13-324-41-770000 | 104-13-324-41-780000 |
| 28 | 1.4 | 0.3 | 0.4 | 14 | 104-13-328-41-770000 | 104-13-328-41-780000 |
| 20 | 1.0 | 0.4 | 0.5 | 20 | 104-13-420-41-770000 | 104-13-420-41-780000 |
| 22 | 1.1 | 0.4 | 0.5 | 18 | 104-13-422-41-770000 | 104-13-422-41-780000 |
| 24 | 1.2 | 0.4 | 0.5 | 16 | 104-13-424-41-770000 | 104-13-424-41-780000 |
| 28 | 1.4 | 0.4 | 0.5 | 14 | 104-13-428-41-770000 | 104-13-428-41-780000 |
| 32 | 1.6 | 0.4 | 0.5 | 12 | 104-13-432-41-770000 | 104-13-432-41-780000 |
| 24 | 1.2 | 0.6 | 0.7 | 16 | 104-13-624-41-770000 | 104-13-624-41-780000 |
| 28 | 1.4 | 0.6 | 0.7 | 14 | 104-13-628-41-770000 | 104-13-628-41-780000 |
| 32 | 1.6 | 0.6 | 0.7 | 12 | 104-13-632-41-770000 | 104-13-632-41-780000 |
| 36 | 1.8 | 0.6 | 0.7 | 11 | 104-13-636-41-770000 | 104-13-636-41-780000 |
| 40 | 2.0 | 0.6 | 0.7 | 10 | 104-13-640-41-770000 | 104-13-640-41-780000 |
| 42 | 2.1 | 0.6 | 0.7 | 9 | 104-13-642-41-770000 | 104-13-642-41-780000 |
| 48 | 2.4 | 0.6 | 0.7 | 8 | 104-13-648-41-770000 | 104-13-648-41-780000 |
| 50 | 2.5 | 0.6 | 0.7 | 8 | 104-13-650-41-770000 | 104-13-650-41-780000 |
| 52 | 2.6 | 0.6 | 0.7 | 7 | 104-13-652-41-770000 | 104-13-652-41-780000 |
| 50 | 2.5 | 0.9 | 1.0 | 8 | 104-13-950-41-770000 | 104-13-950-41-780000 |
| 52 | 2.6 | 0.9 | 1.0 | 7 | 104-13-952-41-770000 | 104-13-952-41-780000 |
| 64 | 3.2 | 0.9 | 1.0 | 6 | 104-13-964-41-770000 | 104-13-964-41-780000 |

RoHS 2002/95/EC

*For RoHS compliance select ◇ plating code.*

*For Electrical, Mechanical & Enviromental Data, See pg. 4*

| PLATING CODE XX= | 13◇ |
|---|---|
| Sleeve (Pin) | 10µ" Au |
| Contact (Clip) | 30µ" Au |

# DUAL-IN-LINE SOCKETS
## Solderless Press-Fit, Compliant Tail
## Open Frame

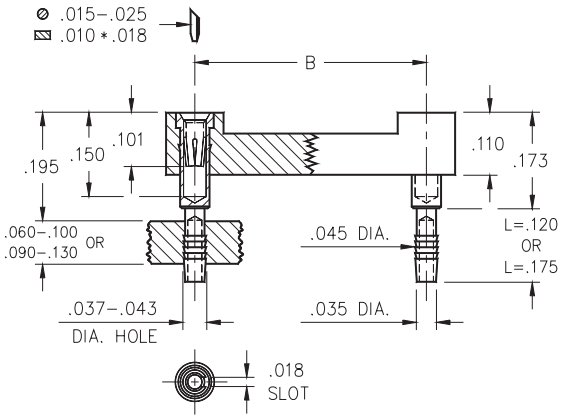


- Unique compliant tail pins conform to .040”±.003” finished hole diameter without stressing inner layers.
- Two tails lengths are offered for .060”-.100” and .090”-.130” thick panels.
- Series 146 use MM #4612 or MM #4613 pins with a BeCu #30 contact, rated at 3 amps. See page 133 for details.
- Insulators are high temperature thermoplastic.

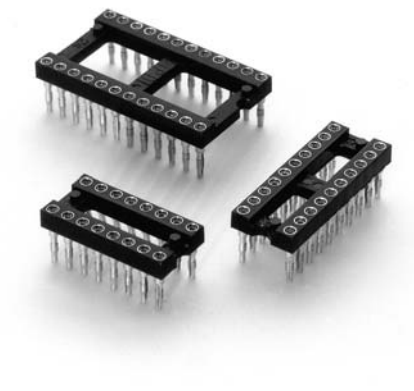

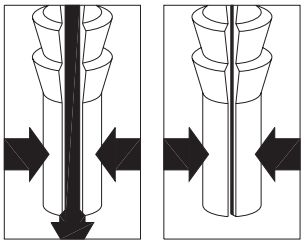

APPLICATION OF COMPLIANT TAIL PINS

Mill-Max’s patented* compliant tail features precision-machined pins that are hollow and slotted to conform to a .040” ± .003” diameter PTH. As the pin is inserted, the slot compresses to fit the PTH, thus avoiding damage (see illustration at left). The pin’s tail has fine serrations that form a perfect “gas tight” connection that doesn’t require soldering. And since the pin doesn’t damage the hole, compliant tail sockets and connectors can be easily replaced.
*Patent No. 4,799,904.

## Ordering Information

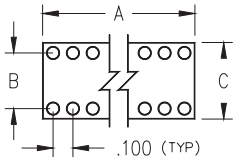


| Total number of pins | A | B | C | Quantity per tube | L=.120 (for .060”-.100” thick panel) | L=.175 (for .090”-.130” thick panel) |
|---|---|---|---|---|---|---|
| 6 | 0.3 | 0.3 | 0.4 | 67 | 146-XX-306-41-012000 | 146-XX-306-41-013000 |
| 8 | 0.4 | 0.3 | 0.4 | 50 | 146-XX-308-41-012000 | 146-XX-308-41-013000 |
| 14 | 0.7 | 0.3 | 0.4 | 28 | 146-XX-314-41-012000 | 146-XX-314-41-013000 |
| 16 | 0.8 | 0.3 | 0.4 | 25 | 146-XX-316-41-012000 | 146-XX-316-41-013000 |
| 18 | 0.9 | 0.3 | 0.4 | 22 | 146-XX-318-41-012000 | 146-XX-318-41-013000 |
| 20 | 1.0 | 0.3 | 0.4 | 20 | 146-XX-320-41-012000 | 146-XX-320-41-013000 |
| 24 | 1.2 | 0.3 | 0.4 | 16 | 146-XX-324-41-012000 | 146-XX-324-41-013000 |
| 22 | 1.1 | 0.4 | 0.5 | 18 | 146-XX-422-41-012000 | 146-XX-422-41-013000 |
| 24 | 1.2 | 0.6 | 0.7 | 16 | 146-XX-624-41-012000 | 146-XX-624-41-013000 |
| 28 | 1.4 | 0.6 | 0.7 | 14 | 146-XX-628-41-012000 | 146-XX-628-41-013000 |
| 32 | 1.6 | 0.6 | 0.7 | 12 | 146-XX-632-41-012000 | 146-XX-632-41-013000 |
| 40 | 2.0 | 0.6 | 0.7 | 10 | 146-XX-640-41-012000 | 146-XX-640-41-013000 |

RoHS 2002/95/EC

*For RoHS compliance select ◇ plating code.*

*For Electrical, Mechanical & Enviromental Data, See pg. 4*

*XX=Plating Code See Below*

| SPECIFY PLATING CODE XX= | | | 93 | | | 43◇ | |
|---|---|---|---|---|---|---|---|
| Sleeve (Pin) | | | 200µ” Sn/Pb | | | 200µ” Sn | |
| Contact (Clip) | | | 30µ” Au | | | 30µ” Au | |

# DUAL-IN-LINE SOCKETS
## With Integral Decoupling Capacitor
## Open Frame

**Series 110, 122, 123...801**

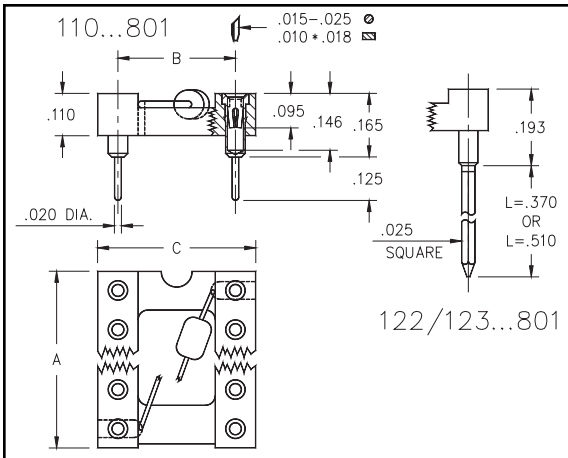


- Low profile DIP sockets with integral decoupling capacitor: .1µ F 20%-50V multi-layer ceramic epoxy encapsulated. Temp. range: -25° C to +85° C.
- Hi-Rel, 4-finger BeCu #30 contact is rated at 3 amps. See page 218 for details.
- Series 110, 122 and 123 use MM #1001, #0088 or #0089 pins. See pages 136 and 166 for details.
- Insulators are high temperature thermoplastic.

## Ordering Information

| Total number of pins | A | B | C | Quantity per tube | Solder Tail | 2 Level Wrapost L = .370 | 3 Level Wrapost L = .510 |
|---|---|---|---|---|---|---|---|
| 14 | 0.7 | 0.3 | 0.4 | 28 | 110-XX-314-41-801000 | 122-13-314-41-801000 | 123-XX-314-41-801000 |
| 16 | 0.8 | 0.3 | 0.4 | 25 | 110-XX-316-41-801000 | 122-13-316-41-801000 | 123-XX-316-41-801000 |
| 18 | 0.9 | 0.3 | 0.4 | 22 | 110-XX-318-41-801000 | 122-13-318-41-801000 | 123-XX-318-41-801000 |
| 20 | 1.0 | 0.3 | 0.4 | 20 | 110-XX-320-41-801000 | 122-13-320-41-801000 | 123-XX-320-41-801000 |
| 22 | 1.1 | 0.3 | 0.4 | 18 | 110-XX-322-41-801000 | 122-13-322-41-801000 | 123-XX-322-41-801000 |
| 24 | 1.2 | 0.3 | 0.4 | 16 | 110-XX-324-41-801000 | 122-13-324-41-801000 | 123-XX-324-41-801000 |
| 28 | 1.4 | 0.3 | 0.4 | 14 | 110-XX-328-41-801000 | 122-13-328-41-801000 | 123-XX-328-41-801000 |
| 22 | 1.1 | 0.4 | 0.5 | 18 | 110-XX-422-41-801000 | 122-13-422-41-801000 | 123-XX-422-41-801000 |
| 24 | 1.2 | 0.6 | 0.7 | 16 | 110-XX-624-41-801000 | 122-13-624-41-801000 | 123-XX-624-41-801000 |
| 28 | 1.4 | 0.6 | 0.7 | 14 | 110-XX-628-41-801000 | 122-13-628-41-801000 | 123-XX-628-41-801000 |
| 32 | 1.6 | 0.6 | 0.7 | 12 | 110-XX-632-41-801000 | 122-13-632-41-801000 | 123-XX-632-41-801000 |
| 40 | 2.0 | 0.6 | 0.7 | 10 | 110-XX-640-41-801000 | 122-13-640-41-801000 | 123-XX-640-41-801000 |

*For Electrical, Mechanical & Enviromental Data, See pg. 4*

*XX=Plating Code See Below*

*For RoHS compliance select ◇ plating code.*

RoHS 2002/95/EC

| SPECIFY PLATING CODE XX= | 13◇ | | 93 | | | 43◇ | |
|---|---|---|---|---|---|---|---|
| Sleeve (Pin) | 10µ" Au | | 200µ" Sn/Pb | | | 200µ" Sn | |
| Contact (Clip) | 30µ" Au | | 30µ" Au | | | 30µ" Au | |

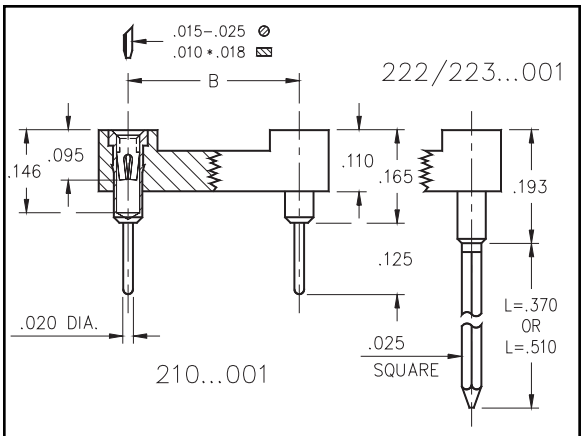


- Closed frame insulator withstands high mechanical impact.
- Available with standard solder pins, 2-level or 3-level wraposts.
- Hi-Rel, 4-finger BeCu #30 contact is rated at 3 amps. See page 218 for details.
- Series 210, 222 and 223 use MM #1001, #0088 or #0089 pins. See pages 136 and 166 for details.
- Insulators are high temperature thermoplastic.

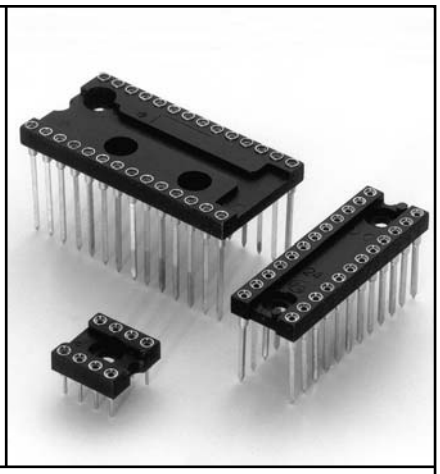

## Ordering Information

| Total number of pins | A | B | C | Quantity per tube | Solder Tail | 2 Level Wrapost L = .370 | 3 Level Wrapost L = .510 |
|---|---|---|---|---|---|---|---|
| 6 | 0.3 | 0.3 | 0.4 | 67 | 210-XX-306-41-001000 | 222-XX-306-41-001000 | 223-XX-306-41-001000 |
| 8 | 0.4 | 0.3 | 0.4 | 50 | 210-XX-308-41-001000 | 222-XX-308-41-001000 | 223-XX-308-41-001000 |
| 10 | 0.5 | 0.3 | 0.4 | 40 | 210-XX-310-41-001000 | 222-XX-310-41-001000 | 223-XX-310-41-001000 |
| 14 | 0.7 | 0.3 | 0.4 | 28 | 210-XX-314-41-001000 | 222-XX-314-41-001000 | 223-XX-314-41-001000 |
| 16 | 0.8 | 0.3 | 0.4 | 25 | 210-XX-316-41-001000 | 222-XX-316-41-001000 | 223-XX-316-41-001000 |
| 18 | 0.9 | 0.3 | 0.4 | 22 | 210-XX-318-41-001000 | 222-XX-318-41-001000 | 223-XX-318-41-001000 |
| 20 | 1.0 | 0.3 | 0.4 | 20 | 210-XX-320-41-001000 | 222-XX-320-41-001000 | 223-XX-320-41-001000 |
| 22 | 1.1 | 0.3 | 0.4 | 18 | 210-XX-322-41-001000 | 222-XX-322-41-001000 | 223-XX-322-41-001000 |
| 24 | 1.2 | 0.3 | 0.4 | 16 | 210-XX-324-41-001000 | 222-XX-324-41-001000 | 223-XX-324-41-001000 |
| 22 | 1.1 | 0.4 | 0.5 | 18 | 210-XX-422-41-001000 | 222-XX-422-41-001000 | 223-XX-422-41-001000 |
| 24 | 1.2 | 0.4 | 0.5 | 16 | 210-XX-424-41-001000 | 222-XX-424-41-001000 | 223-XX-424-41-001000 |
| 24 | 1.2 | 0.6 | 0.7 | 16 | 210-XX-624-41-001000 | 222-XX-624-41-001000 | 223-XX-624-41-001000 |
| 28 | 1.4 | 0.6 | 0.7 | 14 | 210-XX-628-41-001000 | 222-XX-628-41-001000 | 223-XX-628-41-001000 |
| 32 | 1.6 | 0.6 | 0.7 | 12 | 210-XX-632-41-001000 | 222-XX-632-41-001000 | 223-XX-632-41-001000 |
| 36 | 1.8 | 0.6 | 0.7 | 11 | 210-XX-636-41-001000 | 222-XX-636-41-001000 | 223-XX-636-41-001000 |
| 40 | 2.0 | 0.6 | 0.7 | 10 | 210-XX-640-41-001000 | 222-XX-640-41-001000 | 223-XX-640-41-001000 |
| 64 | 3.2 | 0.9 | 1.0 | 6 | 210-XX-964-41-001000 | 222-XX-964-41-001000 | 223-XX-964-41-001000 |

*For Electrical, Mechanical & Enviromental Data, See pg. 4*

*XX=Plating Code See Below*

*For RoHS compliance select ◇ plating code.*

RoHS 2002/95/EC

| SPECIFY PLATING CODE XX= | 13◇ | | 93 | 99 | | 43◇ | 44◇ |
|---|---|---|---|---|---|---|---|
| Sleeve (Pin) | 10µ" Au | | 200µ" Sn/Pb | 200µ" Sn/Pb | | 200µ" Sn | 200µ" Sn |
| Contact (Clip) | 30µ" Au | | 30µ" Au | 200µ" Sn/Pb | | 30µ" Au | 200µ" Sn |

# MILITARY DUAL-IN-LINE SOCKETS
## MIL-S-83734 APPROVED
## Solder Tail, Open Frame

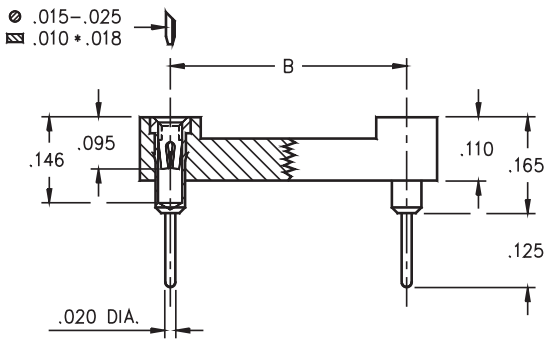


- Sockets are XY stackable.
- Machined outer sleeve with Hi-Rel, BeCu #30 inner contact.
- Socket pins feature closed-entry construction eliminating any solder/flux wicking problems.
- Packaged in tubes compatible with automatic insertion equipment.
- Series 110 use MM #1001 pins. See page 136 for details.
- Insulators are high temperature thermoplastic.

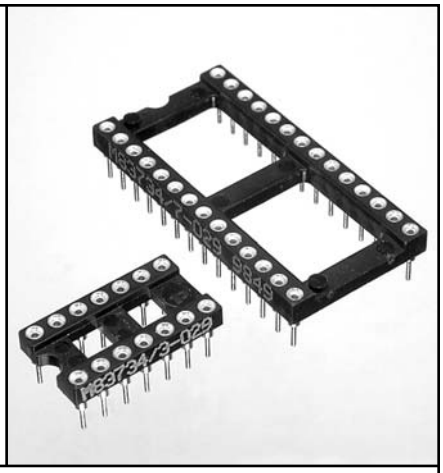

## Ordering Information

| Total number of pins | A | B | C | Quantity per tube | Mill-Max Part Number | Military Part Number |
|---|---|---|---|---|---|---|
| 8 | 0.4 | 0.3 | 0.4 | 50 | 110-XX-308-41-530000 | M83734/2-YYY |
| 14 | 0.7 | 0.3 | 0.4 | 28 | 110-XX-314-41-530000 | M83734/3-YYY |
| 16 | 0.8 | 0.3 | 0.4 | 25 | 110-XX-316-41-530000 | M83734/4-YYY |
| 18 | 0.9 | 0.3 | 0.4 | 22 | 110-XX-318-41-530000 | M83734/5-YYY |
| 20 | 1.0 | 0.3 | 0.4 | 20 | 110-XX-320-41-530000 | M83734/13-YYY |
| 22 | 1.1 | 0.4 | 0.5 | 18 | 110-XX-422-41-530000 | M83734/6-YYY |
| 24 | 1.2 | 0.6 | 0.7 | 16 | 110-XX-624-41-530000 | M83734/8-YYY |
| 28 | 1.4 | 0.6 | 0.7 | 14 | 110-XX-628-41-530000 | M83734/7-YYY |
| 40 | 2.0 | 0.6 | 0.7 | 10 | 110-XX-640-41-530000 | M83734/10-YYY |
| 48 | 2.4 | 0.6 | 0.7 | 8 | 110-XX-648-41-530000 | M83734/14-YYY |
| 64 | 3.2 | 0.9 | 1.0 | 6 | 110-XX-964-41-530000 | M83734/15-YYY |

*For Electrical, Mechanical & Enviromental Data, See pg. 4*

*XX=Plating Code See Below*

**SEE PAGE 35 FOR COMPLETE QPL**

| SPECIFY MILL-MAX PLATING CODE XX= | 33 | 83 | 88 |
|---|---|---|---|
| FOR MILITARY CODE YYY= | 028 | 029 | 030 |
| Sleeve (Pin) | 30µ" Au | 300µ" Sn/Pb | 300µ" Sn/Pb |
| Contact (Clip) | 30µ" Au | 30µ" Au | 100µ"Sn/Pb |

# MILITARY DUAL-IN-LINE SOCKETS
## MIL-S-83734 APPROVED
## Solder Tail, Closed Frame

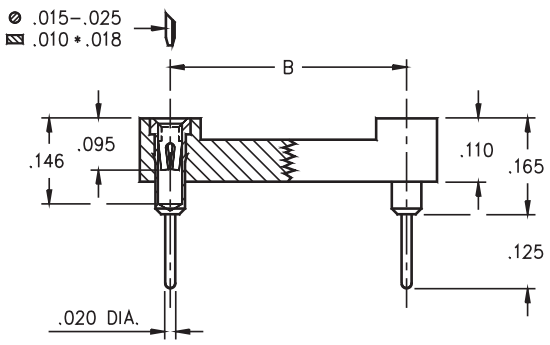


- Sockets are XY stackable.
- Machined outer sleeve with Hi-Rel, BeCu #30 inner contact.
- Socket pins feature closed-end construction eliminating any solder/flux wicking problems.
- Packaged in tubes compatible with automatic insertion equipment.
- Series 210 use MM #1001 pins. See page 136 for details.
- Insulators are high temperature thermoplastic.

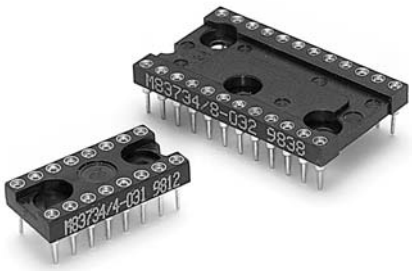


## Ordering Information

| Total number of pins | A | B | C | Quantity per tube | Mill-Max Part Number | Military Part Number |
|---|---|---|---|---|---|---|
| 6 | 0.3 | 0.3 | 0.4 | 67 | 210-XX-306-41-101000 | M83734/1-YYY |
| 8 | 0.4 | 0.3 | 0.4 | 50 | 210-XX-308-41-101000 | M83734/2-YYY |
| 14 | 0.7 | 0.3 | 0.4 | 28 | 210-XX-314-41-101000 | M83734/3-YYY |
| 16 | 0.8 | 0.3 | 0.4 | 25 | 210-XX-316-41-101000 | M83734/4-YYY |
| 18 | 0.9 | 0.3 | 0.4 | 22 | 210-XX-318-41-101000 | M83734/5-YYY |
| 20 | 1.0 | 0.3 | 0.4 | 20 | 210-XX-320-41-101000 | M83734/13-YYY |
| 22 | 1.1 | 0.4 | 0.5 | 18 | 210-XX-422-41-101000 | M83734/6-YYY |
| 24 | 1.2 | 0.6 | 0.7 | 16 | 210-XX-624-41-101000 | M83734/8-YYY |
| 28 | 1.4 | 0.6 | 0.7 | 14 | 210-XX-628-41-101000 | M83734/7-YYY |
| 32 | 1.6 | 0.6 | 0.7 | 10 | 210-XX-632-41-101000 | M83734/17-YYY |
| 40 | 2.0 | 0.6 | 0.7 | 8 | 210-XX-640-41-101000 | M83734/10-YYY |
| 64 | 3.2 | 0.9 | 1.0 | 6 | 210-XX-964-41-101000 | M83734/15-YYY |

*For Electrical, Mechanical & Enviromental Data, See pg. 4*

*XX=Plating Code See Below*

**SEE PAGE 35 FOR COMPLETE QPL**

| | | | |
|---|---|---|---|
| SPECIFY MILL-MAX PLATING CODE XX= | **33** | **83** | **88** |
| FOR MILITARY CODE YYY= | **031** | **032** | **033** |
| (6 PIN ONLY) YYY= | **025** | **026** | **027** |
| (32 PIN ONLY) YYY= | **013** | **014** | **015** |
| Sleeve (Pin) | 30µ" Au | 300µ" Sn/Pb | 300µ"Sn/Pb |
| Contact (Clip) | 30µ" Au | 30µ" Au | 100µ"Sn/Pb |

# MILITARY DUAL-IN-LINE SOCKETS
## MIL-S-83734 APPROVED
## 3 Level Wrapost, Closed Frame

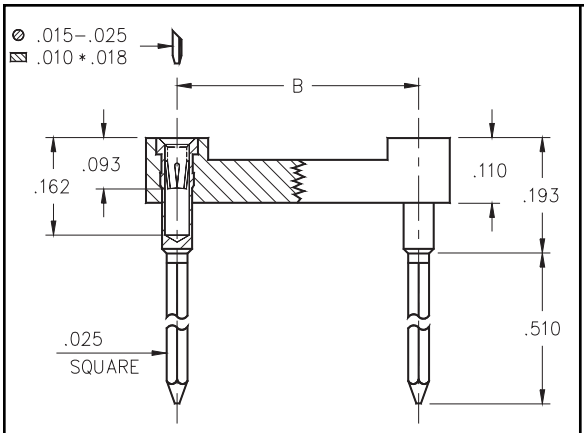


- Sockets are XY stackable.
- Machined outer sleeve with Hi-Rel, BeCu #30 inner contact.
- Socket pins feature closed-end construction eliminating any solder/flux wicking problems.
- Series 223 use MM #0038-3 pins. See page 166 for details.
- Insulators are high temperature thermoplastic.

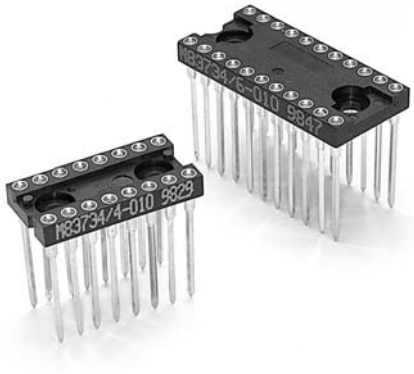


## Ordering Information

| Total number of pins | A | B | C | Quantity per tube | Mill-Max Part Number | Military Part Number |
|---|---|---|---|---|---|---|
| 6 | 0.3 | 0.3 | 0.4 | 67 | 223-XX-306-41-101000 | M83734/1-YYY |
| 8 | 0.4 | 0.3 | 0.4 | 50 | 223-XX-308-41-101000 | M83734/2-YYY |
| 14 | 0.7 | 0.3 | 0.4 | 28 | 223-XX-314-41-101000 | M83734/3-YYY |
| 16 | 0.8 | 0.3 | 0.4 | 25 | 223-XX-316-41-101000 | M83734/4-YYY |
| 18 | 0.9 | 0.3 | 0.4 | 22 | 223-XX-318-41-101000 | M83734/5-YYY |
| 20 | 1.0 | 0.3 | 0.4 | 20 | 223-XX-320-41-101000 | M83734/13-YYY |
| 22 | 1.1 | 0.4 | 0.5 | 18 | 223-XX-422-41-101000 | M83734/6-YYY |
| 24 | 1.2 | 0.6 | 0.7 | 16 | 223-XX-624-41-101000 | M83734/8-YYY |
| 28 | 1.4 | 0.6 | 0.7 | 14 | 223-XX-628-41-101000 | M83734/7-YYY |
| 32 | 1.6 | 0.6 | 0.7 | 12 | 223-XX-632-41-101000 | M83734/17-YYY |
| 40 | 2.0 | 0.6 | 0.7 | 10 | 223-XX-640-41-101000 | M83734/10-YYY |
| 64 | 3.2 | 0.9 | 1.0 | 6 | 223-XX-964-41-101000 | M83734/15-YYY |

*For Electrical, Mechanical & Enviromental Data, See pg. 4*

*XX=Plating Code See Below*

**SEE PAGE 35 FOR COMPLETE QPL**

| | | | |
|---|---|---|---|
| SPECIFY MILL-MAX PLATING CODE XX= | **33** | **83** | **88** |
| FOR MILITARY CODE YYY= | **010** | **011** | **012** |
| (32 PIN ONLY) YYY= | **007** | **008** | **009** |
| Sleeve (Pin) | 30µ" Au | 300µ" Sn/Pb | 300µ" Sn/Pb |
| Contact (Clip) | 30µ" Au | 30µ" Au | 100µ"Sn/Pb |

# DIP SOCKETS QUALIFIED to MIL-S-83734

| MIL SPEC # | MILL-MAX # |
|---|---|
| M83734/1-010 | 223-33-306-41-101000 |
| M83734/1-011 | 223-83-306-41-101000 |
| M83734/1-012 | 223-88-306-41-101000 |
| M83734/1-025 | 210-33-306-41-101000 |
| M83734/1-026 | 210-83-306-41-101000 |
| M83734/1-027 | 210-88-306-41-101000 |
| | |
| M83734/2-010 | 223-33-308-41-101000 |
| M83734/2-011 | 223-83-308-41-101000 |
| M83734/2-012 | 223-88-308-41-101000 |
| M83734/2-028 | 110-33-308-41-530000 |
| M83734/2-029 | 110-83-308-41-530000 |
| M83734/2-030 | 110-88-308-41-530000 |
| M83734/2-031 | 210-33-308-41-101000 |
| M83734/2-032 | 210-83-308-41-101000 |
| M83734/2-033 | 210-88-308-41-101000 |
| | |
| M83734/3-010 | 223-33-314-41-101000 |
| M83734/3-011 | 223-83-314-41-101000 |
| M83734/3-012 | 223-88-314-41-101000 |
| M83734/3-028 | 110-33-314-41-530000 |
| M83734/3-029 | 110-83-314-41-530000 |
| M83734/3-030 | 110-88-314-41-530000 |
| M83734/3-031 | 210-33-314-41-101000 |
| M83734/3-032 | 210-83-314-41-101000 |
| M83734/3-033 | 210-88-314-41-101000 |
| | |
| M83734/4-010 | 223-33-316-41-101000 |
| M83734/4-011 | 223-83-316-41-101000 |
| M83734/4-012 | 223-88-316-41-101000 |
| M83734/4-028 | 110-33-316-41-530000 |
| M83734/4-029 | 110-83-316-41-530000 |
| M83734/4-030 | 110-88-316-41-530000 |
| M83734/4-031 | 210-33-316-41-101000 |
| M83734/4-032 | 210-83-316-41-101000 |
| M83734/4-033 | 210-88-316-41-101000 |
| | |
| M83734/5-010 | 223-33-318-41-101000 |
| M83734/5-011 | 223-83-318-41-101000 |
| M83734/5-012 | 223-88-318-41-101000 |
| M83734/5-028 | 110-33-318-41-530000 |
| M83734/5-029 | 110-83-318-41-530000 |
| M83734/5-030 | 110-88-318-41-530000 |
| M83734/5-031 | 210-33-318-41-101000 |
| M83734/5-032 | 210-83-318-41-101000 |
| M83734/5-033 | 210-88-318-41-101000 |
| | |
| M83734/6-010 | 223-33-422-41-101000 |
| M83734/6-011 | 223-83-422-41-101000 |
| M83734/6-012 | 223-88-422-41-101000 |
| M83734/6-028 | 110-33-422-41-530000 |
| M83734/6-029 | 110-83-422-41-530000 |
| M83734/6-030 | 110-88-422-41-530000 |
| M83734/6-031 | 210-33-422-41-101000 |
| M83734/6-032 | 210-83-422-41-101000 |
| M83734/6-033 | 210-88-422-41-101000 |

| MIL SPEC # | MILL-MAX # |
|---|---|
| M83734/7-010 | 223-33-628-41-101000 |
| M83734/7-011 | 223-83-628-41-101000 |
| M83734/7-012 | 223-88-628-41-101000 |
| M83734/7-028 | 110-33-628-41-530000 |
| M83734/7-029 | 110-83-628-41-530000 |
| M83734/7-030 | 110-88-628-41-530000 |
| M83734/7-031 | 210-33-628-41-101000 |
| M83734/7-032 | 210-83-628-41-101000 |
| M83734/7-033 | 210-88-628-41-101000 |
| | |
| M83734/8-010 | 223-33-624-41-101000 |
| M83734/8-011 | 223-83-624-41-101000 |
| M83734/8-012 | 223-88-624-41-101000 |
| M83734/8-028 | 110-33-624-41-530000 |
| M83734/8-029 | 110-83-624-41-530000 |
| M83734/8-030 | 110-88-624-41-530000 |
| M83734/8-031 | 210-33-624-41-101000 |
| M83734/8-032 | 210-83-624-41-101000 |
| M83734/8-033 | 210-88-624-41-101000 |
| | |
| M83734/9-010 | 223-33-636-41-101000 |
| M83734/9-011 | 223-83-636-41-101000 |
| M83734/9-012 | 223-88-636-41-101000 |
| M83734/9-031 | 210-33-636-41-101000 |
| M83734/9-032 | 210-83-636-41-101000 |
| M83734/9-033 | 210-88-636-41-101000 |
| | |
| M83734/10-010 | 223-33-640-41-101000 |
| M83734/10-011 | 223-83-640-41-101000 |
| M83734/10-012 | 223-88-640-41-101000 |
| M83734/10-028 | 110-33-640-41-530000 |
| M83734/10-029 | 110-83-640-41-530000 |
| M83734/10-030 | 110-88-640-41-530000 |
| M83734/10-031 | 210-33-640-41-101000 |
| M83734/10-032 | 210-83-640-41-101000 |
| M83734/10-033 | 210-88-640-41-101000 |
| | |
| M83734/13-010 | 223-33-320-41-101000 |
| M83734/13-011 | 223-83-320-41-101000 |
| M83734/13-012 | 223-88-320-41-101000 |
| M83734/13-028 | 110-33-320-41-530000 |
| M83734/13-029 | 110-83-320-41-530000 |
| M83734/13-030 | 110-88-320-41-530000 |
| M83734/13-031 | 210-33-320-41-101000 |
| M83734/13-032 | 210-83-320-41-101000 |
| M83734/13-033 | 210-88-320-41-101000 |
| | |
| M83734/14-028 | 110-33-648-41-530000 |
| M83734/14-029 | 110-83-648-41-530000 |
| M83734/14-030 | 110-88-648-41-530000 |
| | |
| M83734/15-010 | 223-33-964-41-101000 |
| M83734/15-011 | 223-83-964-41-101000 |
| M83734/15-012 | 223-88-964-41-101000 |
| M83734/15-028 | 110-33-964-41-530000 |
| M83734/15-029 | 110-83-964-41-530000 |
| M83734/15-030 | 110-88-964-41-530000 |
| M83734/15-031 | 210-33-964-41-101000 |

| MIL SPEC # | MILL-MAX # |
|---|---|
| M83734/15-032 | 210-83-964-41-101000 |
| M83734/15-033 | 210-88-964-41-101000 |
| | |
| M83734/17-001 | 221-33-632-41-101000 |
| M83734/17-002 | 221-83-632-41-101000 |
| M83734/17-003 | 221-88-632-41-101000 |
| M83734/17-004 | 222-33-632-41-101000 |
| M83734/17-005 | 222-83-632-41-101000 |
| M83734/17-006 | 222-88-632-41-101000 |
| M83734/17-007 | 223-33-632-41-101000 |
| M83734/17-008 | 223-83-632-41-101000 |
| M83734/17-009 | 223-88-632-41-101000 |
| M83734/17-013 | 210-33-632-41-101000 |
| M83734/17-014 | 210-83-632-41-101000 |
| M83734/17-015 | 210-88-632-41-101000 |

# DUAL-IN-LINE SOCKETS
## Surface Mount, Gull Wing
## Open Frame

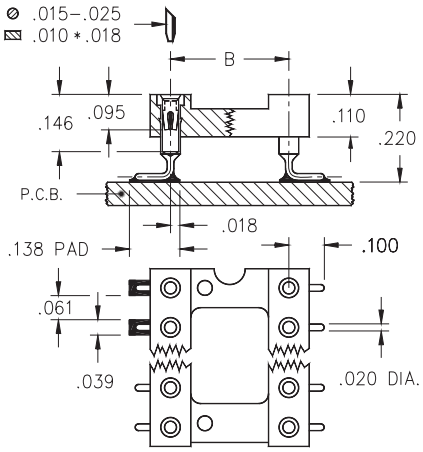


- For infra-red reflow and vapor phase soldering.
- Gull wing terminals for max. strength and easy in-circuit test.
- Hi-Rel, 4-finger BeCu #30 contact is rated at 3 amps. See page 218 for details.
- Series 110 use MM #1005 pins. See page 137 for details.
- Insulators are high temperature thermoplastic.

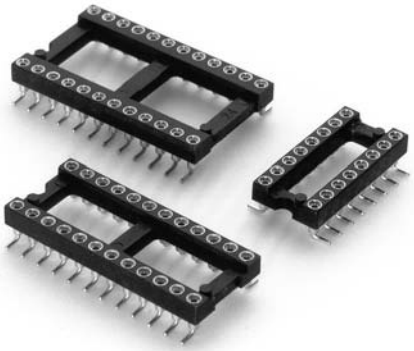

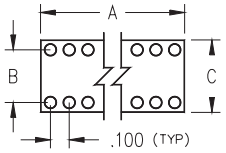


## Ordering Information

| Total number of pins | A | B | C | Quantity per tube | Ordering Information |
|---|---|---|---|---|---|
| 10 | 0.5 | 0.2 | 0.3 | 40 | 110-XX-210-41-105000 |
| 4 | 0.2 | 0.3 | 0.4 | 102 | 110-XX-304-41-105000 |
| 6 | 0.3 | 0.3 | 0.4 | 67 | 110-XX-306-41-105000 |
| 8 | 0.4 | 0.3 | 0.4 | 50 | 110-XX-308-41-105000 |
| 10 | 0.5 | 0.3 | 0.4 | 40 | 110-XX-310-41-105000 |
| 14 | 0.7 | 0.3 | 0.4 | 28 | 110-XX-314-41-105000 |
| 16 | 0.8 | 0.3 | 0.4 | 25 | 110-XX-316-41-105000 |
| 18 | 0.9 | 0.3 | 0.4 | 22 | 110-XX-318-41-105000 |
| 20 | 1.0 | 0.3 | 0.4 | 20 | 110-XX-320-41-105000 |
| 22 | 1.1 | 0.3 | 0.4 | 18 | 110-XX-322-41-105000 |
| 24 | 1.2 | 0.3 | 0.4 | 16 | 110-XX-324-41-105000 |
| 28 | 1.4 | 0.3 | 0.4 | 14 | 110-XX-328-41-105000 |
| 20 | 1.0 | 0.4 | 0.5 | 20 | 110-XX-420-41-105000 |
| 22 | 1.1 | 0.4 | 0.5 | 18 | 110-XX-422-41-105000 |
| 24 | 1.2 | 0.4 | 0.5 | 16 | 110-XX-424-41-105000 |
| 28 | 1.4 | 0.4 | 0.5 | 14 | 110-XX-428-41-105000 |
| 32 | 1.6 | 0.4 | 0.5 | 12 | 110-XX-432-41-105000 |
| 24 | 1.2 | 0.6 | 0.7 | 32 | 110-XX-624-41-105000 |
| 28 | 1.4 | 0.6 | 0.7 | 28 | 110-XX-628-41-105000 |
| 32 | 1.6 | 0.6 | 0.7 | 24 | 110-XX-632-41-105000 |
| 36 | 1.8 | 0.6 | 0.7 | 22 | 110-XX-636-41-105000 |
| 40 | 2.0 | 0.6 | 0.7 | 20 | 110-XX-640-41-105000 |
| 42 | 2.1 | 0.6 | 0.7 | 18 | 110-XX-642-41-105000 |
| 48 | 2.4 | 0.6 | 0.7 | 16 | 110-XX-648-41-105000 |
| 50 | 2.5 | 0.6 | 0.7 | 16 | 110-XX-650-41-105000 |
| 52 | 2.6 | 0.6 | 0.7 | 14 | 110-XX-652-41-105000 |
| 50 | 2.5 | 0.9 | 1.0 | 16 | 110-XX-950-41-105000 |
| 52 | 2.6 | 0.9 | 1.0 | 14 | 110-XX-952-41-105000 |
| 64 | 3.2 | 0.9 | 1.0 | 12 | 110-XX-964-41-105000 |

RoHS 2002/95/EC

*For RoHS compliance select ◇ plating code.*

*For Electrical, Mechanical & Enviromental Data, See pg. 4*

*XX=Plating Code See Below*

| SPECIFY PLATING CODE XX= | | | 93 | | | 43◇ | |
|---|---|---|---|---|---|---|---|
| Sleeve (Pin) | | | 200µ" Sn/Pb | | | 200µ" Sn | |
| Contact (Clip) | | | 30µ" Au | | | 30µ" Au | |

# DUAL-IN-LINE SOCKETS
## Surface Mount, Auto Placement, Gull Wing
## Closed Frame

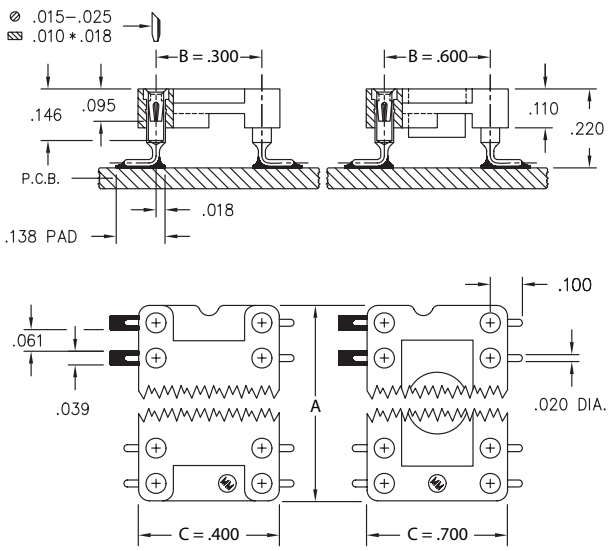


- Closed frame insulator is vision system compatible.
- High-temp Nylon 46 insulator is suitable for all forms of reflow soldering.
- Traditional gull-wing leads permit visual inspection of solder joints.
- Available packaged in tubes or on tape & reel per EIA-481.
- Uses Mill-Max #1005 pin. See page 137 for details.

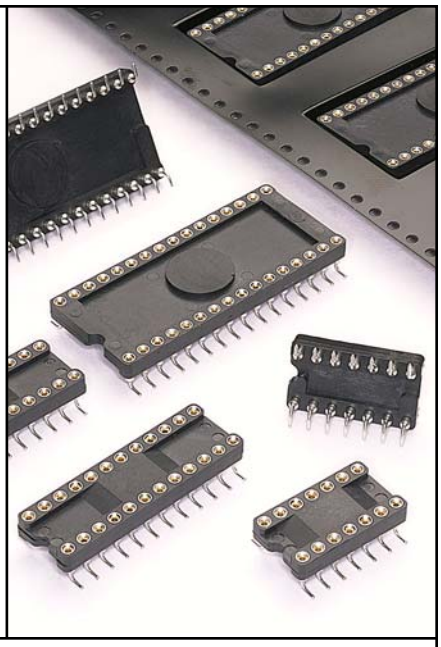

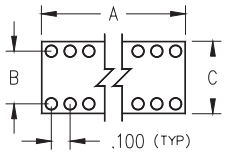


## Ordering Information

| Total number of pins | A | B | C | QTY PER TUBE | TUBE PACKAGING | TAPE & REEL PACKAGING | TAPE WIDTH (mm) | QTY PER REEL |
|---|---|---|---|---|---|---|---|---|
| | | | | **VACUUM PAD TOP SURFACE ONLY** | | | | |
| 6 | 0.3 | 0.3 | 0.4 | 67 | 210-XX-306-41-105000 | 210-XX-306-41-105799 | 16 | 400 |
| 8 | 0.4 | 0.3 | 0.4 | 50 | 210-XX-308-41-105000 | 210-XX-308-41-105799 | 24 | 400 |
| 14 | 0.7 | 0.3 | 0.4 | 28 | 210-XX-314-41-105000 | 210-XX-314-41-105799 | 32 | 400 |
| 16 | 0.8 | 0.3 | 0.4 | 25 | 210-XX-316-41-105000 | 210-XX-316-41-105799 | 32 | 400 |
| 18 | 0.9 | 0.3 | 0.4 | 22 | 210-XX-318-41-105000 | 210-XX-318-41-105799 | 44 | 400 |
| 20 | 1.0 | 0.3 | 0.4 | 20 | 210-XX-320-41-105000 | 210-XX-320-41-105799 | 44 | 400 |
| 24 | 1.2 | 0.3 | 0.4 | 16 | 210-XX-324-41-105000 | 210-XX-324-41-105799 | 44 | 400 |
| | | | | **VACUUM PAD TOP AND BOTTOM** | | | | |
| 24 | 1.2 | 0.6 | 0.7 | 16 | 210-XX-624-41-105000 | 210-XX-624-41-105799 | 44 | 300 |
| 28 | 1.4 | 0.6 | 0.7 | 14 | 210-XX-628-41-105000 | 210-XX-628-41-105799 | 56 | 300 |
| 32 | 1.6 | 0.6 | 0.7 | 12 | 210-XX-632-41-105000 | 210-XX-632-41-105799 | 56 | 300 |
| 40 | 2.0 | 0.6 | 0.7 | 10 | 210-XX-640-41-105000 | NOT AVAILABLE | | |

*For Electrical, Mechanical & Enviromental Data, See pg. 4*

*XX=Plating Code See Below*

*For RoHS compliance select ◇ plating code.*

RoHS 2002/95/EC

| SPECIFY PLATING CODE XX= | 13◇ | | 93 | | | 43◇ | |
|---|---|---|---|---|---|---|---|
| Sleeve (Pin) | 10μ" Au | | 200μ" Sn/Pb | | | 200μ" Sn | |
| Contact (Clip) | 30μ" Au | | 30μ" Au | | | 30μ" Au | |

# DUAL-IN-LINE SOCKETS
## Surface Mount, Stub Tail
## Open Frame

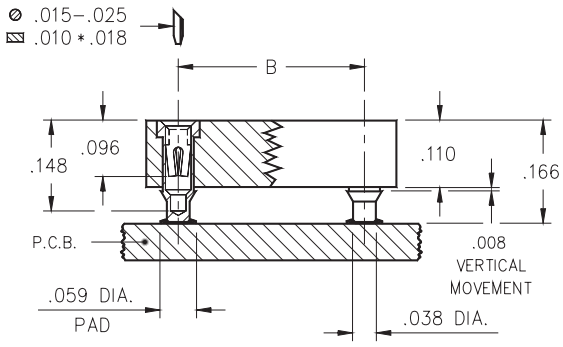


- Unique floating contacts compensate for the effects of unevenly dispensed solder paste.
- High temperature insulator can withstand infra-red reflow and vapor phase soldering.
- Hi-Rel, 4-finger BeCu #30 contact is rated at 3 amps. See page 218 for details.
- Series 114 use MM #1434 pins. See page 133 for details.

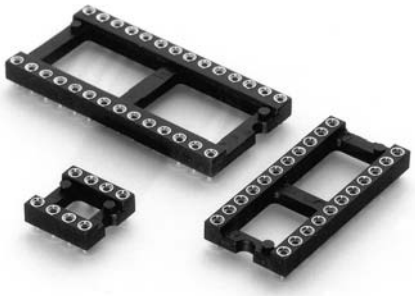

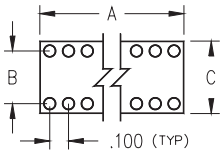


## Ordering Information

| Total number of pins | A | B | C | Quantity per tube | Ordering Information |
|---|---|---|---|---|---|
| 10 | 0.5 | 0.2 | 0.3 | 41 | 114-XX-210-41-117000 |
| 4 | 0.2 | 0.3 | 0.4 | 100 | 114-XX-304-41-117000 |
| 6 | 0.3 | 0.3 | 0.4 | 67 | 114-XX-306-41-117000 |
| 8 | 0.4 | 0.3 | 0.4 | 50 | 114-XX-308-41-117000 |
| 10 | 0.5 | 0.3 | 0.4 | 40 | 114-XX-310-41-117000 |
| 14 | 0.7 | 0.3 | 0.4 | 28 | 114-XX-314-41-117000 |
| 16 | 0.8 | 0.3 | 0.4 | 25 | 114-XX-316-41-117000 |
| 18 | 0.9 | 0.3 | 0.4 | 22 | 114-XX-318-41-117000 |
| 20 | 1.0 | 0.3 | 0.4 | 20 | 114-XX-320-41-117000 |
| 22 | 1.1 | 0.3 | 0.4 | 18 | 114-XX-322-41-117000 |
| 24 | 1.2 | 0.3 | 0.4 | 16 | 114-XX-324-41-117000 |
| 28 | 1.4 | 0.3 | 0.4 | 14 | 114-XX-328-41-117000 |
| 20 | 1.0 | 0.4 | 0.5 | 20 | 114-XX-420-41-117000 |
| 22 | 1.1 | 0.4 | 0.5 | 18 | 114-XX-422-41-117000 |
| 24 | 1.2 | 0.4 | 0.5 | 16 | 114-XX-424-41-117000 |
| 28 | 1.4 | 0.4 | 0.5 | 14 | 114-XX-428-41-117000 |
| 32 | 1.6 | 0.4 | 0.5 | 12 | 114-XX-432-41-117000 |
| 24 | 1.2 | 0.6 | 0.7 | 16 | 114-XX-624-41-117000 |
| 28 | 1.4 | 0.6 | 0.7 | 14 | 114-XX-628-41-117000 |
| 32 | 1.6 | 0.6 | 0.7 | 12 | 114-XX-632-41-117000 |
| 36 | 1.8 | 0.6 | 0.7 | 11 | 114-XX-636-41-117000 |
| 40 | 2.0 | 0.6 | 0.7 | 10 | 114-XX-640-41-117000 |
| 42 | 2.1 | 0.6 | 0.7 | 9 | 114-XX-642-41-117000 |
| 48 | 2.4 | 0.6 | 0.7 | 8 | 114-XX-648-41-117000 |
| 50 | 2.5 | 0.6 | 0.7 | 8 | 114-XX-650-41-117000 |
| 52 | 2.6 | 0.6 | 0.7 | 7 | 114-XX-652-41-117000 |
| 50 | 2.5 | 0.9 | 1.0 | 8 | 114-XX-950-41-117000 |
| 52 | 2.6 | 0.9 | 1.0 | 7 | 114-XX-952-41-117000 |
| 64 | 3.2 | 0.9 | 1.0 | 6 | 114-XX-964-41-117000 |

RoHS 2002/95/EC

*For RoHS compliance select ◇ plating code.*

*For Electrical, Mechanical & Enviromental Data, See pg. 4*

*XX=Plating Code See Below*

| SPECIFY PLATING CODE XX= | | | 93 | | | 43◇ | |
|---|---|---|---|---|---|---|---|
| Sleeve (Pin) | | | 200µ" Sn/Pb | | | 200µ" Sn | |
| Contact (Clip) | | | 30µ" Au | | | 30µ" Au | |

# DUAL-IN-LINE SOCKETS
## Surface Mount, Stub Tail, with Alignment Pins for Hand Placement

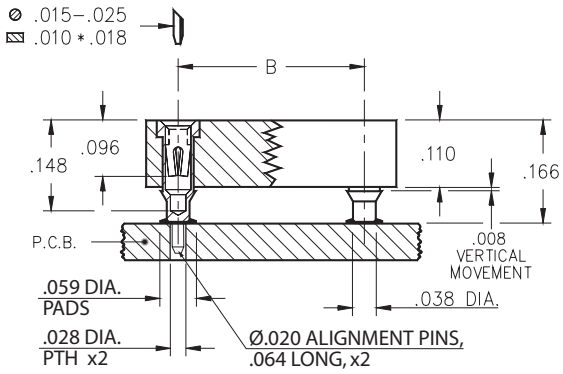


- Unique floating contacts compensate for the effects of unevenly dispensed solder paste.
- Two corner alignment pins (power & ground positions) permit manual placement.
- High temperature insulator can withstand infra-red reflow and vapor phase soldering.
- Hi-Rel, 4-finger BeCu #30 contact is rated at 3 amps. See page 218 for details.
- Series 113 use MM #1334 and #1434 pins. See pages 133 & 142.

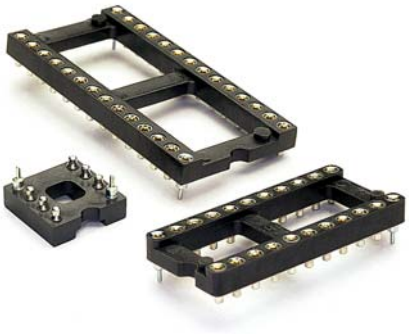

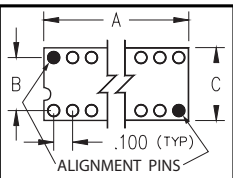


## Ordering Information

| Total number of pins | A | B | C | Quantity per tube | Ordering Information |
|---|---|---|---|---|---|
| 10 | 0.5 | 0.2 | 0.3 | 41 | 113-XX-210-41-117000 |
| 4 | 0.2 | 0.3 | 0.4 | 100 | 113-XX-304-41-117000 |
| 6 | 0.3 | 0.3 | 0.4 | 67 | 113-XX-306-41-117000 |
| 8 | 0.4 | 0.3 | 0.4 | 50 | 113-XX-308-41-117000 |
| 10 | 0.5 | 0.3 | 0.4 | 40 | 113-XX-310-41-117000 |
| 14 | 0.7 | 0.3 | 0.4 | 28 | 113-XX-314-41-117000 |
| 16 | 0.8 | 0.3 | 0.4 | 25 | 113-XX-316-41-117000 |
| 18 | 0.9 | 0.3 | 0.4 | 22 | 113-XX-318-41-117000 |
| 20 | 1.0 | 0.3 | 0.4 | 20 | 113-XX-320-41-117000 |
| 22 | 1.1 | 0.3 | 0.4 | 18 | 113-XX-322-41-117000 |
| 24 | 1.2 | 0.3 | 0.4 | 16 | 113-XX-324-41-117000 |
| 28 | 1.4 | 0.3 | 0.4 | 14 | 113-XX-328-41-117000 |
| 20 | 1.0 | 0.4 | 0.5 | 20 | 113-XX-420-41-117000 |
| 22 | 1.1 | 0.4 | 0.5 | 18 | 113-XX-422-41-117000 |
| 24 | 1.2 | 0.4 | 0.5 | 16 | 113-XX-424-41-117000 |
| 28 | 1.4 | 0.4 | 0.5 | 14 | 113-XX-428-41-117000 |
| 32 | 1.6 | 0.4 | 0.5 | 12 | 113-XX-432-41-117000 |
| 24 | 1.2 | 0.6 | 0.7 | 16 | 113-XX-624-41-117000 |
| 28 | 1.4 | 0.6 | 0.7 | 14 | 113-XX-628-41-117000 |
| 32 | 1.6 | 0.6 | 0.7 | 12 | 113-XX-632-41-117000 |
| 36 | 1.8 | 0.6 | 0.7 | 11 | 113-XX-636-41-117000 |
| 40 | 2.0 | 0.6 | 0.7 | 10 | 113-XX-640-41-117000 |
| 42 | 2.1 | 0.6 | 0.7 | 9 | 113-XX-642-41-117000 |
| 48 | 2.4 | 0.6 | 0.7 | 8 | 113-XX-648-41-117000 |
| 50 | 2.5 | 0.6 | 0.7 | 8 | 113-XX-650-41-117000 |
| 52 | 2.6 | 0.6 | 0.7 | 7 | 113-XX-652-41-117000 |
| 50 | 2.5 | 0.9 | 1.0 | 8 | 113-XX-950-41-117000 |
| 52 | 2.6 | 0.9 | 1.0 | 7 | 113-XX-952-41-117000 |
| 64 | 3.2 | 0.9 | 1.0 | 6 | 113-XX-964-41-117000 |

RoHS 2002/95/EC

*For RoHS compliance select ◇ plating code.*

*For Electrical, Mechanical & Enviromental Data, See pg. 4*

*XX=Plating Code See Below*

| SPECIFY PLATING CODE XX= | 13◇ | | 93 | | | 43◇ | |
|---|---|---|---|---|---|---|---|
| Sleeve (Pin) | 10µ" Au | | 200µ" Sn/Pb | | | 200µ" Sn | |
| Contact (Clip) | 30µ" Au | | 30µ" Au | | | 30µ" Au | |

# DUAL-IN-LINE SOCKETS
## Surface Mount, Auto Placement, Stub Tail
## Closed Frame

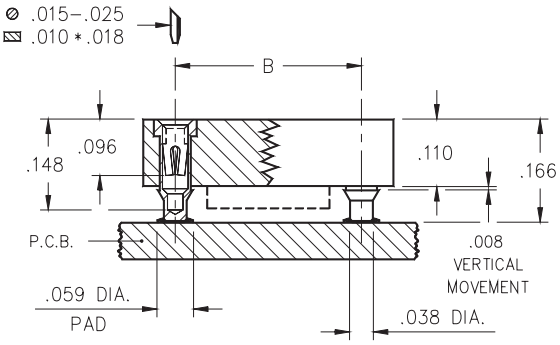


- Unique floating contacts compensate for the effects of unevenly screened solder paste.
- Available packaged in tubes or on tape & reel per EIA-481.
- High temp. Nylon 46 insulator, is suitable for infra-red & vapor phase soldering. Closed frame insulator is vision system compatible.
- Hi-Rel, 4-finger BeCu #30 contact is rated at 3 amps. See page 218 for details.
- Series 214 use MM #1434 pins. See page 133 for details.

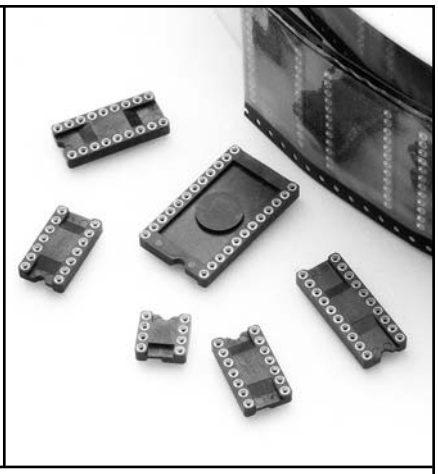

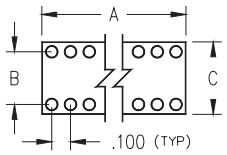


## Ordering Information

| Total number of pins | A | B | C | QTY PER TUBE | TUBE PACKAGING | TAPE & REEL PACKAGING | TAPE WIDTH (mm) | QTY PER REEL |
|---|---|---|---|---|---|---|---|---|
| | | | | **VACUUM PAD TOP SURFACE ONLY** | | | | |
| 6 | 0.3 | 0.3 | 0.4 | 67 | 214-XX-306-01-670800 | 214-XX-306-01-670799 | 16 | 750 |
| 8 | 0.4 | 0.3 | 0.4 | 50 | 214-XX-308-01-670800 | 214-XX-308-01-670799 | 16 | 1000 |
| 14 | 0.7 | 0.3 | 0.4 | 28 | 214-XX-314-01-670800 | 214-XX-314-01-670799 | 32 | 750 |
| 16 | 0.8 | 0.3 | 0.4 | 25 | 214-XX-316-01-670800 | 214-XX-316-01-670799 | 32 | 750 |
| 18 | 0.9 | 0.3 | 0.4 | 22 | 214-XX-318-01-670800 | 214-XX-318-01-670799 | 44 | 750 |
| 20 | 1.0 | 0.3 | 0.4 | 20 | 214-XX-320-01-670800 | 214-XX-320-01-670799 | 44 | 750 |
| | | | | **VACUUM PAD TOP AND BOTTOM** | | | | |
| 24 | 1.2 | 0.6 | 0.7 | 16 | 214-XX-624-01-670800 | 214-XX-624-01-670799 | 44 | 400 |
| 28 | 1.4 | 0.6 | 0.7 | 14 | 214-XX-628-01-670800 | 214-XX-628-01-670799 | 56 | 400 |
| 32 | 1.6 | 0.6 | 0.7 | 12 | 214-XX-632-01-670800 | 214-XX-632-01-670799 | 56 | 400 |
| 40 | 2.0 | 0.6 | 0.7 | 10 | 214-XX-640-01-670800 | NOT AVAILABLE | | |

*For Electrical, Mechanical & Enviromental Data, See pg. 4*

*XX=Plating Code See Below*

*For RoHS compliance select ◇ plating code.*

RoHS 2002/95/EC

| SPECIFY PLATING CODE XX= | | | | 99 | | | 44◇ |
|---|---|---|---|---|---|---|---|
| Sleeve (Pin) | | | | 200µ"Sn/Pb | | | 200µ"Sn |
| Contact (Clip) | | | | 200µ"Sn/Pb | | | 200µ"Sn |

# DUAL-IN-LINE SOCKETS
## 1 thru 4 Level Wrapost
## Open Frame

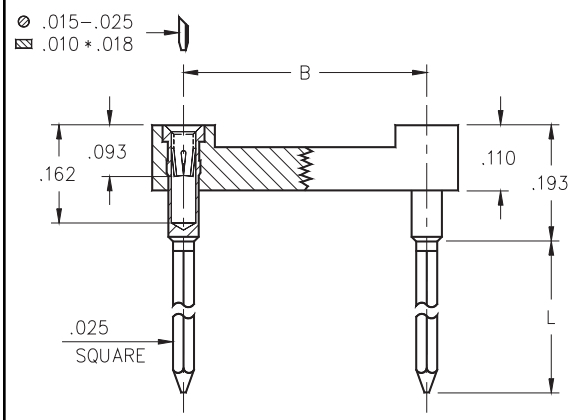


- Solderless wrapost terminals are firmly locked in the insulator body to withstand torque of a wrapping tool.
- Hi-Rel, 4-finger BeCu #30 contact is rated at 3 amps. See page 218 for details.
- Series 121, 122, 123 and 124 use MM #0040, #0086, #0088 and #0089 pins. See page 166 for details.
- Insulators are high temperature thermoplastic.


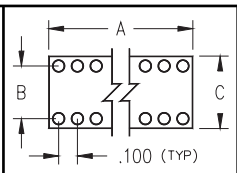


*For Electrical, Mechanical & Enviromental Data, See pg. 4*

## Ordering Information

*XX=Plating Code See Below*

| Total number of pins | A | B | C | Quantity per tube | 1 Level Wrapost L = .260 | 2 Level Wrapost L = .370 | 3 Level Wrapost L = .510 | 4 Level Wrapost L = .630 |
|---|---|---|---|---|---|---|---|---|
| 10 | 0.5 | 0.2 | 0.3 | 40 | 121-13-210-41-001000 | 122-13-210-41-001000 | 123-XX-210-41-001000 | 124-XX-210-41-002000 |
| | | | | | | | | 43 or 93 Plating Code ONLY |
| 4 | 0.2 | 0.3 | 0.4 | 102 | 121-13-304-41-001000 | 122-13-304-41-001000 | 123-XX-304-41-001000 | 124-XX-304-41-002000 |
| 6 | 0.3 | 0.3 | 0.4 | 67 | 121-13-306-41-001000 | 122-13-306-41-001000 | 123-XX-306-41-001000 | 124-XX-306-41-002000 |
| 8 | 0.4 | 0.3 | 0.4 | 50 | 121-13-308-41-001000 | 122-13-308-41-001000 | 123-XX-308-41-001000 | 124-XX-308-41-002000 |
| 10 | 0.5 | 0.3 | 0.4 | 40 | 121-13-310-41-001000 | 122-13-310-41-001000 | 123-XX-310-41-001000 | 124-XX-310-41-002000 |
| 14 | 0.7 | 0.3 | 0.4 | 28 | 121-13-314-41-001000 | 122-13-314-41-001000 | 123-XX-314-41-001000 | 124-XX-314-41-002000 |
| 16 | 0.8 | 0.3 | 0.4 | 25 | 121-13-316-41-001000 | 122-13-316-41-001000 | 123-XX-316-41-001000 | 124-XX-316-41-002000 |
| 18 | 0.9 | 0.3 | 0.4 | 22 | 121-13-318-41-001000 | 122-13-318-41-001000 | 123-XX-318-41-001000 | 124-XX-318-41-002000 |
| 20 | 1.0 | 0.3 | 0.4 | 20 | 121-13-320-41-001000 | 122-13-320-41-001000 | 123-XX-320-41-001000 | 124-XX-320-41-002000 |
| 22 | 1.1 | 0.3 | 0.4 | 18 | 121-13-322-41-001000 | 122-13-322-41-001000 | 123-XX-322-41-001000 | 124-XX-322-41-002000 |
| 24 | 1.2 | 0.3 | 0.4 | 16 | 121-13-324-41-001000 | 122-13-324-41-001000 | 123-XX-324-41-001000 | 124-XX-324-41-002000 |
| 28 | 1.4 | 0.3 | 0.4 | 14 | 121-13-328-41-001000 | 122-13-328-41-001000 | 123-XX-328-41-001000 | 124-XX-328-41-002000 |
| | | | | | | | | 43 or 93 Plating Code ONLY |
| 20 | 1.0 | 0.4 | 0.5 | 20 | 121-13-420-41-001000 | 122-13-420-41-001000 | 123-XX-420-41-001000 | 124-XX-420-41-002000 |
| 22 | 1.1 | 0.4 | 0.5 | 18 | 121-13-422-41-001000 | 122-13-422-41-001000 | 123-XX-422-41-001000 | 124-XX-422-41-002000 |
| 24 | 1.2 | 0.4 | 0.5 | 16 | 121-13-424-41-001000 | 122-13-424-41-001000 | 123-XX-424-41-001000 | 124-XX-424-41-002000 |
| 28 | 1.4 | 0.4 | 0.5 | 14 | 121-13-428-41-001000 | 122-13-428-41-001000 | 123-XX-428-41-001000 | 124-XX-428-41-002000 |
| 32 | 1.6 | 0.4 | 0.5 | 12 | 121-13-432-41-001000 | 122-13-432-41-001000 | 123-XX-432-41-001000 | 124-XX-432-41-002000 |
| | | | | | | | | 43 or 93 Plating Code ONLY |
| 24 | 1.2 | 0.6 | 0.7 | 16 | 121-13-624-41-001000 | 122-13-624-41-001000 | 123-XX-624-41-001000 | 124-XX-624-41-002000 |
| 28 | 1.4 | 0.6 | 0.7 | 14 | 121-13-628-41-001000 | 122-13-628-41-001000 | 123-XX-628-41-001000 | 124-XX-628-41-002000 |
| 32 | 1.6 | 0.6 | 0.7 | 12 | 121-13-632-41-001000 | 122-13-632-41-001000 | 123-XX-632-41-001000 | 124-XX-632-41-002000 |
| 36 | 1.8 | 0.6 | 0.7 | 11 | 121-13-636-41-001000 | 122-13-636-41-001000 | 123-XX-636-41-001000 | 124-XX-636-41-002000 |
| 40 | 2.0 | 0.6 | 0.7 | 10 | 121-13-640-41-001000 | 122-13-640-41-001000 | 123-XX-640-41-001000 | 124-XX-640-41-002000 |
| 42 | 2.1 | 0.6 | 0.7 | 9 | 121-13-642-41-001000 | 122-13-642-41-001000 | 123-XX-642-41-001000 | 124-XX-642-41-002000 |
| 48 | 2.4 | 0.6 | 0.7 | 8 | 121-13-648-41-001000 | 122-13-648-41-001000 | 123-XX-648-41-001000 | 124-XX-648-41-002000 |
| 50 | 2.5 | 0.6 | 0.7 | 8 | 121-13-650-41-001000 | 122-13-650-41-001000 | 123-XX-650-41-001000 | 124-XX-650-41-002000 |
| 52 | 2.6 | 0.6 | 0.7 | 7 | 121-13-652-41-001000 | 122-13-652-41-001000 | 123-XX-652-41-001000 | 124-XX-652-41-002000 |
| | | | | | | | | 43 or 93 Plating Code ONLY |
| 50 | 2.5 | 0.9 | 1.0 | 8 | 121-13-950-41-001000 | 122-13-950-41-001000 | 123-XX-950-41-001000 | 124-XX-950-41-002000 |
| 52 | 2.6 | 0.9 | 1.0 | 7 | 121-13-952-41-001000 | 122-13-952-41-001000 | 123-XX-952-41-001000 | 124-XX-952-41-002000 |
| 64 | 3.2 | 0.9 | 1.0 | 6 | 121-13-964-41-001000 | 122-13-964-41-001000 | 123-XX-964-41-001000 | 124-XX-964-41-002000 |

| SPECIFY PLATING CODE XX= | 13◇ | | 93 | | 43◇ |
|---|---|---|---|---|---|
| Sleeve (Pin) | 10μ" Au | | 200μ" Sn/Pb | | 200μ" Sn |
| Contact (Clip) | 30μ" Au | | 30μ" Au | | 30μ" Au |

*For RoHS compliance select ◇ plating code.*

# DUAL-IN-LINE SOCKETS
## Pluggable Wrapost
## Open Frame

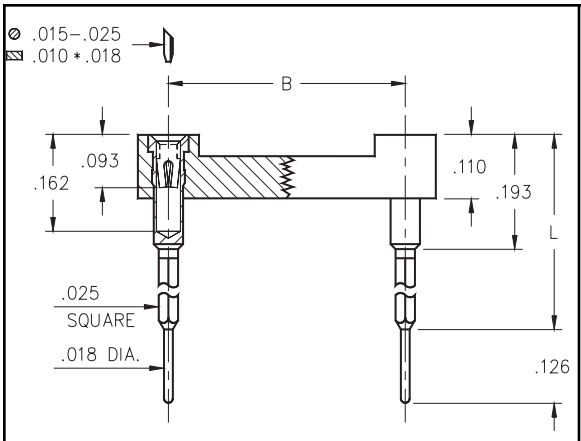


- Combines one through three level wrapost with pluggable solder tails.
- Suitable for use as an interconnect socket with intermediate wire wrapped connections.
- Hi-Rel, 4-finger BeCu #30 contact is rated at 3 amps. See page 218 for details.
- Series 126 use MM #2601, #2602 & #2603 pins. See page 167 for details.
- Insulators are high temperature thermoplastic.

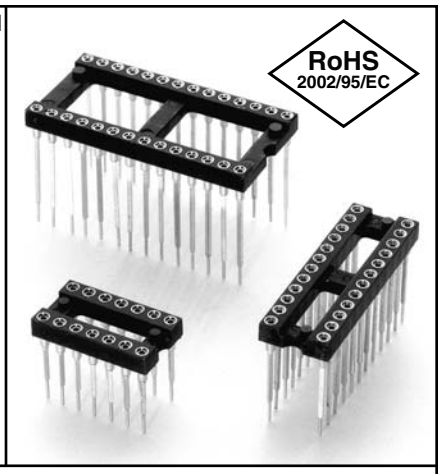


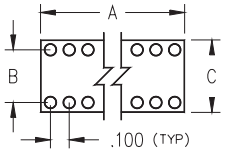


*For Electrical, Mechanical & Enviromental Data, See pg. 4*

## Ordering Information

*XX=Plating Code See Below*

| Total number of pins | A | B | C | Quantity per tube | L = .425 (1 level = .232) | L = .543 (2 level = .350) | L = .661 (3 level = .469) |
|---|---|---|---|---|---|---|---|
| 10 | 0.5 | 0.2 | 0.3 | 40 | 126-XX-210-41-001000 | 126-XX-210-41-002000 | 126-XX-210-41-003000 |
| 4 | 0.2 | 0.3 | 0.4 | 102 | 126-XX-304-41-001000 | 126-XX-304-41-002000 | 126-XX-304-41-003000 |
| 6 | 0.3 | 0.3 | 0.4 | 67 | 126-XX-306-41-001000 | 126-XX-306-41-002000 | 126-XX-306-41-003000 |
| 8 | 0.4 | 0.3 | 0.4 | 50 | 126-XX-308-41-001000 | 126-XX-308-41-002000 | 126-XX-308-41-003000 |
| 10 | 0.5 | 0.3 | 0.4 | 40 | 126-XX-310-41-001000 | 126-XX-310-41-002000 | 126-XX-310-41-003000 |
| 14 | 0.7 | 0.3 | 0.4 | 28 | 126-XX-314-41-001000 | 126-XX-314-41-002000 | 126-XX-314-41-003000 |
| 16 | 0.8 | 0.3 | 0.4 | 25 | 126-XX-316-41-001000 | 126-XX-316-41-002000 | 126-XX-316-41-003000 |
| 18 | 0.9 | 0.3 | 0.4 | 22 | 126-XX-318-41-001000 | 126-XX-318-41-002000 | 126-XX-318-41-003000 |
| 20 | 1.0 | 0.3 | 0.4 | 20 | 126-XX-320-41-001000 | 126-XX-320-41-002000 | 126-XX-320-41-003000 |
| 22 | 1.1 | 0.3 | 0.4 | 18 | 126-XX-322-41-001000 | 126-XX-322-41-002000 | 126-XX-322-41-003000 |
| 24 | 1.2 | 0.3 | 0.4 | 16 | 126-XX-324-41-001000 | 126-XX-324-41-002000 | 126-XX-324-41-003000 |
| 28 | 1.4 | 0.3 | 0.4 | 14 | 126-XX-328-41-001000 | 126-XX-328-41-002000 | 126-XX-328-41-003000 |
| 20 | 1.0 | 0.4 | 0.5 | 20 | 126-XX-420-41-001000 | 126-XX-420-41-002000 | 126-XX-420-41-003000 |
| 22 | 1.1 | 0.4 | 0.5 | 18 | 126-XX-422-41-001000 | 126-XX-422-41-002000 | 126-XX-422-41-003000 |
| 24 | 1.2 | 0.4 | 0.5 | 16 | 126-XX-424-41-001000 | 126-XX-424-41-002000 | 126-XX-424-41-003000 |
| 28 | 1.4 | 0.4 | 0.5 | 14 | 126-XX-428-41-001000 | 126-XX-428-41-002000 | 126-XX-428-41-003000 |
| 32 | 1.6 | 0.4 | 0.5 | 12 | 126-XX-432-41-001000 | 126-XX-432-41-002000 | 126-XX-432-41-003000 |
| 24 | 1.2 | 0.6 | 0.7 | 16 | 126-XX-624-41-001000 | 126-XX-624-41-002000 | 126-XX-624-41-003000 |
| 28 | 1.4 | 0.6 | 0.7 | 14 | 126-XX-628-41-001000 | 126-XX-628-41-002000 | 126-XX-628-41-003000 |
| 32 | 1.6 | 0.6 | 0.7 | 12 | 126-XX-632-41-001000 | 126-XX-632-41-002000 | 126-XX-632-41-003000 |
| 36 | 1.8 | 0.6 | 0.7 | 11 | 126-XX-636-41-001000 | 126-XX-636-41-002000 | 126-XX-636-41-003000 |
| 40 | 2.0 | 0.6 | 0.7 | 10 | 126-XX-640-41-001000 | 126-XX-640-41-002000 | 126-XX-640-41-003000 |
| 42 | 2.1 | 0.6 | 0.7 | 9 | 126-XX-642-41-001000 | 126-XX-642-41-002000 | 126-XX-642-41-003000 |
| 48 | 2.4 | 0.6 | 0.7 | 8 | 126-XX-648-41-001000 | 126-XX-648-41-002000 | 126-XX-648-41-003000 |
| 50 | 2.5 | 0.6 | 0.7 | 8 | 126-XX-650-41-001000 | 126-XX-650-41-002000 | 126-XX-650-41-003000 |
| 52 | 2.6 | 0.6 | 0.7 | 7 | 126-XX-652-41-001000 | 126-XX-652-41-002000 | 126-XX-652-41-003000 |
| 50 | 2.5 | 0.9 | 1.0 | 8 | 126-XX-950-41-001000 | 126-XX-950-41-002000 | 126-XX-950-41-003000 |
| 52 | 2.6 | 0.9 | 1.0 | 7 | 126-XX-952-41-001000 | 126-XX-952-41-002000 | 126-XX-952-41-003000 |
| 64 | 3.2 | 0.9 | 1.0 | 6 | 126-XX-964-41-001000 | 126-XX-964-41-002000 | 126-XX-964-41-003000 |

| SPECIFY PLATING CODE XX= | | 93 | | 43◇ | |
|---|---|---|---|---|---|
| Sleeve (Pin) | | 200μ" Sn/Pb | | 200μ" Sn | |
| Contact (Clip) | | 30μ" Au | | 30μ" Au | |

*For RoHS compliance select ◇ plating code.*

# DUAL-IN-LINE SOCKETS
## Elevated
## Open Frame

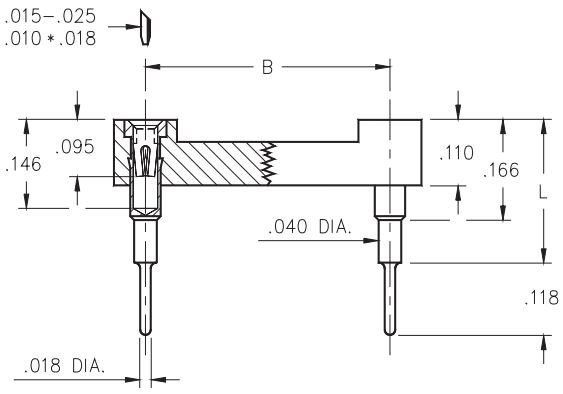


- For mechanical and electrical interconnection and stacking of PCBs.
- Other platings and heights are available upon request.
- Hi-Rel, 4-finger BeCu #30 contact is rated at 3 amps. See page 218 for details.
- Series 116 use MM #0153-X pins. See page 138 for details.
- Insulators are high temperature thermoplastic.

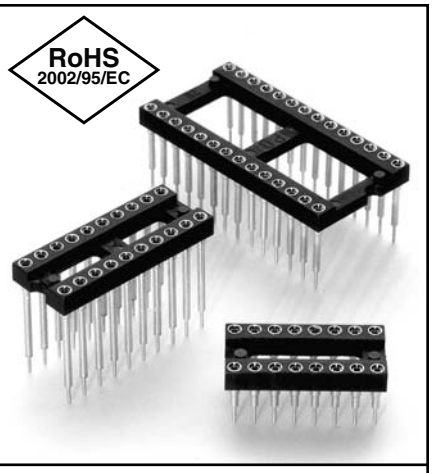


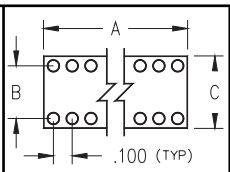


*For Electrical, Mechanical & Enviromental Data, See pg. 4*

## Ordering Information

*XX=Plating Code See Below*

| Total number of pins | A | B | C | Quantity per tube | L = .236 | L = .315 | L = .402 | L = .472 | L = .594 |
|---|---|---|---|---|---|---|---|---|---|
| 10 | 0.5 | 0.2 | 0.3 | 40 | 116-XX-210-41-006000 | 116-XX-210-41-003000 | 116-XX-210-41-007000 | 116-XX-210-41-008000 | 116-XX-210-41-001000 |
| 4 | 0.2 | 0.3 | 0.4 | 102 | 116-XX-304-41-006000 | 116-XX-304-41-003000 | 116-XX-304-41-007000 | 116-XX-304-41-008000 | 116-XX-304-41-001000 |
| 6 | 0.3 | 0.3 | 0.4 | 67 | 116-XX-306-41-006000 | 116-XX-306-41-003000 | 116-XX-306-41-007000 | 116-XX-306-41-008000 | 116-XX-306-41-001000 |
| 8 | 0.4 | 0.3 | 0.4 | 50 | 116-XX-308-41-006000 | 116-XX-308-41-003000 | 116-XX-308-41-007000 | 116-XX-308-41-008000 | 116-XX-308-41-001000 |
| 10 | 0.5 | 0.3 | 0.4 | 40 | 116-XX-310-41-006000 | 116-XX-310-41-003000 | 116-XX-310-41-007000 | 116-XX-310-41-008000 | 116-XX-310-41-001000 |
| 14 | 0.7 | 0.3 | 0.4 | 28 | 116-XX-314-41-006000 | 116-XX-314-41-003000 | 116-XX-314-41-007000 | 116-XX-314-41-008000 | 116-XX-314-41-001000 |
| 16 | 0.8 | 0.3 | 0.4 | 25 | 116-XX-316-41-006000 | 116-XX-316-41-003000 | 116-XX-316-41-007000 | 116-XX-316-41-008000 | 116-XX-316-41-001000 |
| 18 | 0.9 | 0.3 | 0.4 | 22 | 116-XX-318-41-006000 | 116-XX-318-41-003000 | 116-XX-318-41-007000 | 116-XX-318-41-008000 | 116-XX-318-41-001000 |
| 20 | 1.0 | 0.3 | 0.4 | 20 | 116-XX-320-41-006000 | 116-XX-320-41-003000 | 116-XX-320-41-007000 | 116-XX-320-41-008000 | 116-XX-320-41-001000 |
| 22 | 1.1 | 0.3 | 0.4 | 18 | 116-XX-322-41-006000 | 116-XX-322-41-003000 | 116-XX-322-41-007000 | 116-XX-322-41-008000 | 116-XX-322-41-001000 |
| 24 | 1.2 | 0.3 | 0.4 | 16 | 116-XX-324-41-006000 | 116-XX-324-41-003000 | 116-XX-324-41-007000 | 116-XX-324-41-008000 | 116-XX-324-41-001000 |
| 28 | 1.4 | 0.3 | 0.4 | 14 | 116-XX-328-41-006000 | 116-XX-328-41-003000 | 116-XX-328-41-007000 | 116-XX-328-41-008000 | 116-XX-328-41-001000 |
| 20 | 1.0 | 0.4 | 0.5 | 20 | 116-XX-420-41-006000 | 116-XX-420-41-003000 | 116-XX-420-41-007000 | 116-XX-420-41-008000 | 116-XX-420-41-001000 |
| 22 | 1.1 | 0.4 | 0.5 | 18 | 116-XX-422-41-006000 | 116-XX-422-41-003000 | 116-XX-422-41-007000 | 116-XX-422-41-008000 | 116-XX-422-41-001000 |
| 24 | 1.2 | 0.4 | 0.5 | 16 | 116-XX-424-41-006000 | 116-XX-424-41-003000 | 116-XX-424-41-007000 | 116-XX-424-41-008000 | 116-XX-424-41-001000 |
| 28 | 1.4 | 0.4 | 0.5 | 14 | 116-XX-428-41-006000 | 116-XX-428-41-003000 | 116-XX-428-41-007000 | 116-XX-428-41-008000 | 116-XX-428-41-001000 |
| 32 | 1.6 | 0.4 | 0.5 | 12 | 116-XX-432-41-006000 | 116-XX-432-41-003000 | 116-XX-432-41-007000 | 116-XX-432-41-008000 | 116-XX-432-41-001000 |
| 24 | 1.2 | 0.6 | 0.7 | 16 | 116-XX-624-41-006000 | 116-XX-624-41-003000 | 116-XX-624-41-007000 | 116-XX-624-41-008000 | 116-XX-624-41-001000 |
| 28 | 1.4 | 0.6 | 0.7 | 14 | 116-XX-628-41-006000 | 116-XX-628-41-003000 | 116-XX-628-41-007000 | 116-XX-628-41-008000 | 116-XX-628-41-001000 |
| 32 | 1.6 | 0.6 | 0.7 | 12 | 116-XX-632-41-006000 | 116-XX-632-41-003000 | 116-XX-632-41-007000 | 116-XX-632-41-008000 | 116-XX-632-41-001000 |
| 36 | 1.8 | 0.6 | 0.7 | 11 | 116-XX-636-41-006000 | 116-XX-636-41-003000 | 116-XX-636-41-007000 | 116-XX-636-41-008000 | 116-XX-636-41-001000 |
| 40 | 2.0 | 0.6 | 0.7 | 10 | 116-XX-640-41-006000 | 116-XX-640-41-003000 | 116-XX-640-41-007000 | 116-XX-640-41-008000 | 116-XX-640-41-001000 |
| 42 | 2.1 | 0.6 | 0.7 | 9 | 116-XX-642-41-006000 | 116-XX-642-41-003000 | 116-XX-642-41-007000 | 116-XX-642-41-008000 | 116-XX-642-41-001000 |
| 48 | 2.4 | 0.6 | 0.7 | 8 | 116-XX-648-41-006000 | 116-XX-648-41-003000 | 116-XX-648-41-007000 | 116-XX-648-41-008000 | 116-XX-648-41-001000 |
| 50 | 2.5 | 0.6 | 0.7 | 8 | 116-XX-650-41-006000 | 116-XX-650-41-003000 | 116-XX-650-41-007000 | 116-XX-650-41-008000 | 116-XX-650-41-001000 |
| 52 | 2.6 | 0.6 | 0.7 | 7 | 116-XX-652-41-006000 | 116-XX-652-41-003000 | 116-XX-652-41-007000 | 116-XX-652-41-008000 | 116-XX-652-41-001000 |
| 50 | 2.5 | 0.9 | 1.0 | 8 | 116-XX-950-41-006000 | 116-XX-950-41-003000 | 116-XX-950-41-007000 | 116-XX-950-41-008000 | 116-XX-950-41-001000 |
| 52 | 2.6 | 0.9 | 1.0 | 7 | 116-XX-952-41-006000 | 116-XX-952-41-003000 | 116-XX-952-41-007000 | 116-XX-952-41-008000 | 116-XX-952-41-001000 |
| 64 | 3.2 | 0.9 | 1.0 | 6 | 116-XX-964-41-006000 | 116-XX-964-41-003000 | 116-XX-964-41-007000 | 116-XX-964-41-008000 | 116-XX-964-41-001000 |

| SPECIFY PLATING CODE XX= | | 93 | | | 43◇ |
|---|---|---|---|---|---|
| Sleeve (Pin) | | 200μ" Sn/Pb | | | 200μ" Sn |
| Contact (Clip) | | 30μ" Au | | | 30μ" Au |

*For RoHS compliance select ◇ plating code.*

# DUAL-IN-LINE SOCKETS
## Carrier Type
## Solder Tail

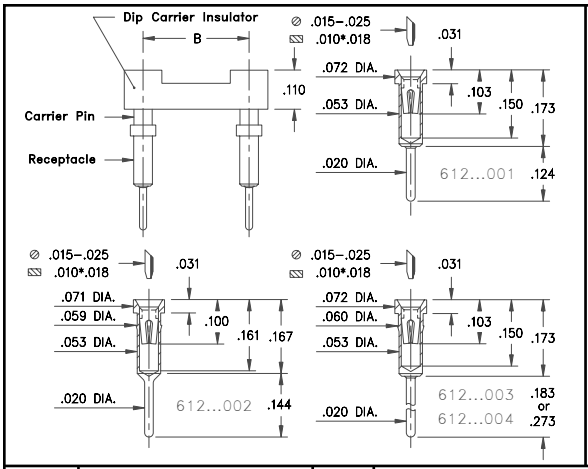


- Convenient way to load loose receptacles on a PC board.
- Removable plastic carriers can be returned for reloading.
- Hi-Rel, 4-finger BeCu #30 contact is rated at 3 amps. See page 218 for details.
- Series 612 use MM #0132, #0135, #0255 or #8855 pins. See pages 136 and 142 for details.
- Insulators are high temperature thermoplastic.

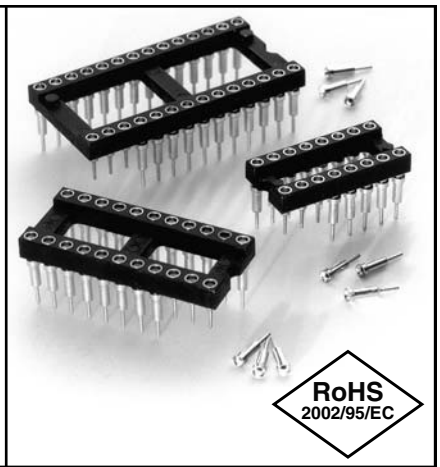


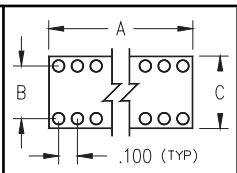


*For Electrical, Mechanical & Enviromental Data, See pg. 4*

## Ordering Information

*XX=Plating Code See Below*

| Total number of pins | A | B | C | Quantity per tube | Tail Length = .124 (.022 Min. Mounting Hole) | Tail Length = .144 (.022 Min. Mounting hole) | Tail Length = .183 (.022 Min. Mounting hole) | Tail Length = .273 (.022 Min. Mounting hole) |
|---|---|---|---|---|---|---|---|---|
| 10 | 0.5 | 0.2 | 0.3 | 40 | 612-XX-210-41-001000 | 612-XX-210-41-002000 | 612-XX-210-41-003000 | 612-XX-210-41-004000 |
| 4 | 0.2 | 0.3 | 0.4 | 102 | 612-XX-304-41-001000 | 612-XX-304-41-002000 | 612-XX-304-41-003000 | 612-XX-304-41-004000 |
| 6 | 0.3 | 0.3 | 0.4 | 68 | 612-XX-306-41-001000 | 612-XX-306-41-002000 | 612-XX-306-41-003000 | 612-XX-306-41-004000 |
| 8 | 0.4 | 0.3 | 0.4 | 50 | 612-XX-308-41-001000 | 612-XX-308-41-002000 | 612-XX-308-41-003000 | 612-XX-308-41-004000 |
| 10 | 0.5 | 0.3 | 0.4 | 40 | 612-XX-310-41-001000 | 612-XX-310-41-002000 | 612-XX-310-41-003000 | 612-XX-310-41-004000 |
| 14 | 0.7 | 0.3 | 0.4 | 28 | 612-XX-314-41-001000 | 612-XX-314-41-002000 | 612-XX-314-41-003000 | 612-XX-314-41-004000 |
| 16 | 0.8 | 0.3 | 0.4 | 25 | 612-XX-316-41-001000 | 612-XX-316-41-002000 | 612-XX-316-41-003000 | 612-XX-316-41-004000 |
| 18 | 0.9 | 0.3 | 0.4 | 22 | 612-XX-318-41-001000 | 612-XX-318-41-002000 | 612-XX-318-41-003000 | 612-XX-318-41-004000 |
| 20 | 1.0 | 0.3 | 0.4 | 20 | 612-XX-320-41-001000 | 612-XX-320-41-002000 | 612-XX-320-41-003000 | 612-XX-320-41-004000 |
| 22 | 1.1 | 0.3 | 0.4 | 18 | 612-XX-322-41-001000 | 612-XX-322-41-002000 | 612-XX-322-41-003000 | 612-XX-322-41-004000 |
| 24 | 1.2 | 0.3 | 0.4 | 16 | 612-XX-324-41-001000 | 612-XX-324-41-002000 | 612-XX-324-41-003000 | 612-XX-324-41-004000 |
| 28 | 1.4 | 0.3 | 0.4 | 14 | 612-XX-328-41-001000 | 612-XX-328-41-002000 | 612-XX-328-41-003000 | 612-XX-328-41-004000 |
| 20 | 1.0 | 0.4 | 0.5 | 20 | 612-XX-420-41-001000 | 612-XX-420-41-002000 | 612-XX-420-41-003000 | 612-XX-420-41-004000 |
| 22 | 1.1 | 0.4 | 0.5 | 18 | 612-XX-422-41-001000 | 612-XX-422-41-002000 | 612-XX-422-41-003000 | 612-XX-422-41-004000 |
| 24 | 1.2 | 0.4 | 0.5 | 16 | 612-XX-424-41-001000 | 612-XX-424-41-002000 | 612-XX-424-41-003000 | 612-XX-424-41-004000 |
| 28 | 1.4 | 0.4 | 0.5 | 14 | 612-XX-428-41-001000 | 612-XX-428-41-002000 | 612-XX-428-41-003000 | 612-XX-428-41-004000 |
| 32 | 1.6 | 0.4 | 0.5 | 12 | 612-XX-432-41-001000 | 612-XX-432-41-002000 | 612-XX-432-41-003000 | 612-XX-432-41-004000 |
| 24 | 1.2 | 0.6 | 0.7 | 16 | 612-XX-624-41-001000 | 612-XX-624-41-002000 | 612-XX-624-41-003000 | 612-XX-624-41-004000 |
| 28 | 1.4 | 0.6 | 0.7 | 14 | 612-XX-628-41-001000 | 612-XX-628-41-002000 | 612-XX-628-41-003000 | 612-XX-628-41-004000 |
| 32 | 1.6 | 0.6 | 0.7 | 12 | 612-XX-632-41-001000 | 612-XX-632-41-002000 | 612-XX-632-41-003000 | 612-XX-632-41-004000 |
| 36 | 1.8 | 0.6 | 0.7 | 11 | 612-XX-636-41-001000 | 612-XX-636-41-002000 | 612-XX-636-41-003000 | 612-XX-636-41-004000 |
| 40 | 2.0 | 0.6 | 0.7 | 10 | 612-XX-640-41-001000 | 612-XX-640-41-002000 | 612-XX-640-41-003000 | 612-XX-640-41-004000 |
| 42 | 2.1 | 0.6 | 0.7 | 9 | 612-XX-642-41-001000 | 612-XX-642-41-002000 | 612-XX-642-41-003000 | 612-XX-642-41-004000 |
| 48 | 2.4 | 0.6 | 0.7 | 8 | 612-XX-648-41-001000 | 612-XX-648-41-002000 | 612-XX-648-41-003000 | 612-XX-648-41-004000 |
| 50 | 2.5 | 0.6 | 0.7 | 8 | 612-XX-650-41-001000 | 612-XX-650-41-002000 | 612-XX-650-41-003000 | 612-XX-650-41-004000 |
| 52 | 2.6 | 0.6 | 0.7 | 7 | 612-XX-652-41-001000 | 612-XX-652-41-002000 | 612-XX-652-41-003000 | 612-XX-652-41-004000 |
| 50 | 2.5 | 0.9 | 1.0 | 8 | 612-XX-950-41-001000 | 612-XX-950-41-002000 | 612-XX-950-41-003000 | 612-XX-950-41-004000 |
| 52 | 2.6 | 0.9 | 1.0 | 7 | 612-XX-952-41-001000 | 612-XX-952-41-002000 | 612-XX-952-41-003000 | 612-XX-952-41-004000 |
| 64 | 3.2 | 0.9 | 1.0 | 6 | 612-XX-964-41-001000 | 612-XX-964-41-002000 | 612-XX-964-41-003000 | 612-XX-964-41-004000 |

| SPECIFY PLATING CODE XX= | | 93 | | 43◇ | |
|---|---|---|---|---|---|
| Sleeve (Pin) | | 200μ" Sn/Pb | | 200μ" Sn | |
| Contact (Clip) | | 30μ" Au | | 30μ" Au | |

*For RoHS compliance select ◇ plating code.*

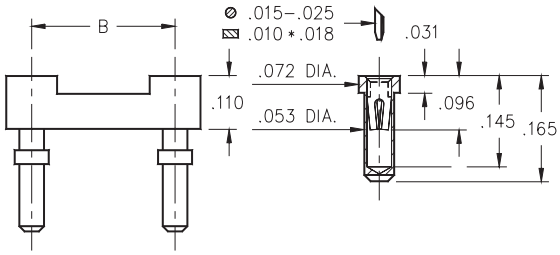


- Convenient way to load loose receptacles on a PC board.
- Removable plastic carriers can be returned for reloading.
- Hi-Rel, 4-finger BeCu #30 contact is rated at 3 amps. See page 218 for details.
- Series 614 use MM #1401 pins. See page 141 for details.
- Insulators are high temperature thermoplastic.

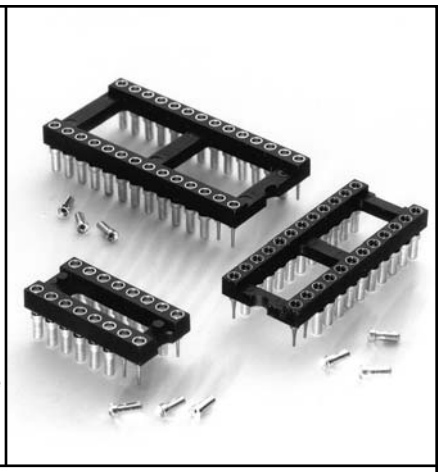

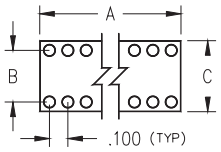


## Ordering Information

| Total number of pins | A | B | C | Quantity per tube | |
|---|---|---|---|---|---|
| 10 | 0.5 | 0.2 | 0.3 | 40 | 614-XX-210-41-001000 |
| 4 | 0.2 | 0.3 | 0.4 | 102 | 614-XX-304-41-001000 |
| 6 | 0.3 | 0.3 | 0.4 | 67 | 614-XX-306-41-001000 |
| 8 | 0.4 | 0.3 | 0.4 | 50 | 614-XX-308-41-001000 |
| 10 | 0.5 | 0.3 | 0.4 | 40 | 614-XX-310-41-001000 |
| 14 | 0.7 | 0.3 | 0.4 | 28 | 614-XX-314-41-001000 |
| 16 | 0.8 | 0.3 | 0.4 | 25 | 614-XX-316-41-001000 |
| 18 | 0.9 | 0.3 | 0.4 | 22 | 614-XX-318-41-001000 |
| 20 | 1.0 | 0.3 | 0.4 | 20 | 614-XX-320-41-001000 |
| 22 | 1.1 | 0.3 | 0.4 | 18 | 614-XX-322-41-001000 |
| 24 | 1.2 | 0.3 | 0.4 | 16 | 614-XX-324-41-001000 |
| 28 | 1.4 | 0.3 | 0.4 | 14 | 614-XX-328-41-001000 |
| 20 | 1.0 | 0.4 | 0.5 | 20 | 614-XX-420-41-001000 |
| 22 | 1.1 | 0.4 | 0.5 | 18 | 614-XX-422-41-001000 |
| 24 | 1.2 | 0.4 | 0.5 | 16 | 614-XX-424-41-001000 |
| 28 | 1.4 | 0.4 | 0.5 | 14 | 614-XX-428-41-001000 |
| 32 | 1.6 | 0.4 | 0.5 | 12 | 614-XX-432-41-001000 |
| 24 | 1.2 | 0.6 | 0.7 | 16 | 614-XX-624-41-001000 |
| 28 | 1.4 | 0.6 | 0.7 | 14 | 614-XX-628-41-001000 |
| 32 | 1.6 | 0.6 | 0.7 | 12 | 614-XX-632-41-001000 |
| 36 | 1.8 | 0.6 | 0.7 | 11 | 614-XX-636-41-001000 |
| 40 | 2.0 | 0.6 | 0.7 | 10 | 614-XX-640-41-001000 |
| 42 | 2.1 | 0.6 | 0.7 | 9 | 614-XX-642-41-001000 |
| 48 | 2.4 | 0.6 | 0.7 | 8 | 614-XX-648-41-001000 |
| 50 | 2.5 | 0.6 | 0.7 | 8 | 614-XX-650-41-001000 |
| 52 | 2.6 | 0.6 | 0.7 | 7 | 614-XX-652-41-001000 |
| 50 | 2.5 | 0.9 | 1.0 | 8 | 614-XX-950-41-001000 |
| 52 | 2.6 | 0.9 | 1.0 | 7 | 614-XX-952-41-001000 |
| 64 | 3.2 | 0.9 | 1.0 | 6 | 614-XX-964-41-001000 |

RoHS 2002/95/EC

*For RoHS compliance select ◇ plating code.*

*For Electrical, Mechanical & Enviromental Data, See pg. 4*

*XX=Plating Code See Below*

| SPECIFY PLATING CODE XX= | | | 93 | | | 43◇ | |
|---|---|---|---|---|---|---|---|
| Sleeve (Pin) | | | 200µ" Sn/Pb | | | 200µ" Sn | |
| Contact (Clip) | | | 30µ" Au | | | 30µ" Au | |

# DUAL-IN-LINE SOCKETS
## Carrier Type
## Low Profile

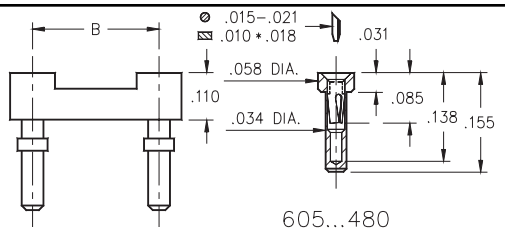


605...480

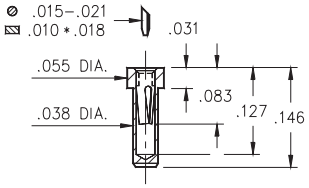


614...007

- Low profile receptacles sit only .031" high above the board.
- Removable plastic carriers can be returned for reloading.
- Hi-Rel, 3-finger BeCu #11 contact is rated at 3 amps. See page 217 for details.
- Series 605 and 614 use MM #0548 & #1407 pins. See page 128 for details.
- Insulators are high temperature thermoplastic.

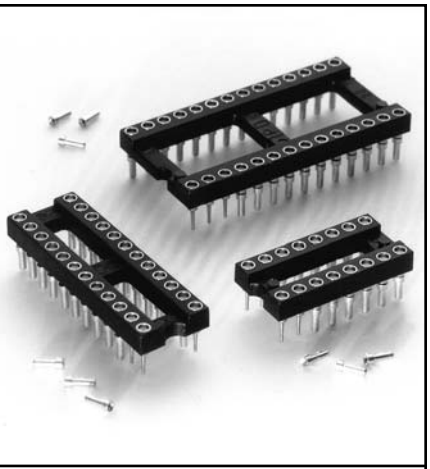

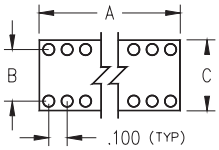


## Ordering Information

| Total number of pins | A | B | C | Quantity per tube | Length = .146 (.039 Min. Mounting Hole) | Length = .155 (.035 Min. Mounting Hole) |
|---|---|---|---|---|---|---|
| 10 | 0.5 | 0.2 | 0.3 | 40 | 614-XX-210-31-007000 | 605-XX-210-11-480000 |
| 4 | 0.2 | 0.3 | 0.4 | 102 | 614-XX-304-31-007000 | 605-XX-304-11-480000 |
| 6 | 0.3 | 0.3 | 0.4 | 68 | 614-XX-306-31-007000 | 605-XX-306-11-480000 |
| 8 | 0.4 | 0.3 | 0.4 | 50 | 614-XX-308-31-007000 | 605-XX-308-11-480000 |
| 10 | 0.5 | 0.3 | 0.4 | 40 | 614-XX-310-31-007000 | 605-XX-310-11-480000 |
| 14 | 0.7 | 0.3 | 0.4 | 28 | 614-XX-314-31-007000 | 605-XX-314-11-480000 |
| 16 | 0.8 | 0.3 | 0.4 | 25 | 614-XX-316-31-007000 | 605-XX-316-11-480000 |
| 18 | 0.9 | 0.3 | 0.4 | 22 | 614-XX-318-31-007000 | 605-XX-318-11-480000 |
| 20 | 1.0 | 0.3 | 0.4 | 20 | 614-XX-320-31-007000 | 605-XX-320-11-480000 |
| 22 | 1.1 | 0.3 | 0.4 | 18 | 614-XX-322-31-007000 | 605-XX-322-11-480000 |
| 24 | 1.2 | 0.3 | 0.4 | 16 | 614-XX-324-31-007000 | 605-XX-324-11-480000 |
| 28 | 1.4 | 0.3 | 0.4 | 14 | 614-XX-328-31-007000 | 605-XX-328-11-480000 |
| 20 | 1.0 | 0.4 | 0.5 | 20 | 614-XX-420-31-007000 | 605-XX-420-11-480000 |
| 22 | 1.1 | 0.4 | 0.5 | 18 | 614-XX-422-31-007000 | 605-XX-422-11-480000 |
| 24 | 1.2 | 0.4 | 0.5 | 16 | 614-XX-424-31-007000 | 605-XX-424-11-480000 |
| 28 | 1.4 | 0.4 | 0.5 | 14 | 614-XX-428-31-007000 | 605-XX-428-11-480000 |
| 32 | 1.6 | 0.4 | 0.5 | 12 | 614-XX-432-31-007000 | 605-XX-432-11-480000 |
| 24 | 1.2 | 0.6 | 0.7 | 16 | 614-XX-624-31-007000 | 605-XX-624-11-480000 |
| 28 | 1.4 | 0.6 | 0.7 | 14 | 614-XX-628-31-007000 | 605-XX-628-11-480000 |
| 32 | 1.6 | 0.6 | 0.7 | 12 | 614-XX-632-31-007000 | 605-XX-632-11-480000 |
| 36 | 1.8 | 0.6 | 0.7 | 11 | 614-XX-636-31-007000 | 605-XX-636-11-480000 |
| 40 | 2.0 | 0.6 | 0.7 | 10 | 614-XX-640-31-007000 | 605-XX-640-11-480000 |
| 42 | 2.1 | 0.6 | 0.7 | 9 | 614-XX-642-31-007000 | 605-XX-642-11-480000 |
| 48 | 2.4 | 0.6 | 0.7 | 8 | 614-XX-648-31-007000 | 605-XX-648-11-480000 |
| 50 | 2.5 | 0.6 | 0.7 | 8 | 614-XX-650-31-007000 | 605-XX-650-11-480000 |
| 52 | 2.6 | 0.6 | 0.7 | 7 | 614-XX-652-31-007000 | 605-XX-652-11-480000 |
| 50 | 2.5 | 0.9 | 1.0 | 8 | 614-XX-950-31-007000 | 605-XX-950-11-480000 |
| 52 | 2.6 | 0.9 | 1.0 | 7 | 614-XX-952-31-007000 | 605-XX-952-11-480000 |
| 64 | 3.2 | 0.9 | 1.0 | 6 | 614-XX-964-31-007000 | 605-XX-964-11-480000 |

RoHS 2002/95/EC

*For RoHS compliance select ◇ plating code.*

*For Electrical, Mechanical & Enviromental Data, See pg. 4*

*XX=Plating Code See Below*

| SPECIFY PLATING CODE XX= | | | 93 | | | 43◇ | |
|---|---|---|---|---|---|---|---|
| Sleeve (Pin) | | | 200µ" Sn/Pb | | | 200µ" Sn | |
| Contact (Clip) | | | 30µ" Au | | | 30µ" Au | |

# DUAL-IN-LINE SOCKETS
## Carrier Type
## Ultra Low Profile

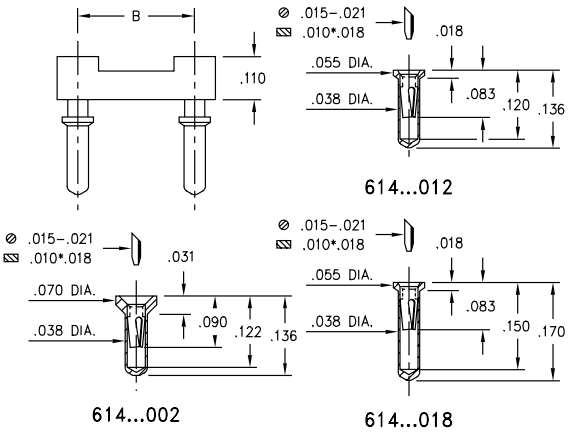


- Ultra low profile receptacles sit only .018" to .031" high above the board.
- Removable plastic carriers can be returned for reloading.
- Hi-Rel, 3-finger BeCu #11 contact is rated at 3 amps. See page 217 for details.
- Series 614 use MM #0552-1, #0552-2 or #0442-0 pins. See pages 128 and 129 for details.
- Insulators are high temperature thermoplastic.

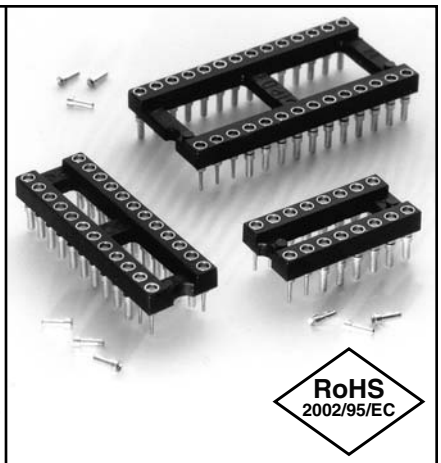


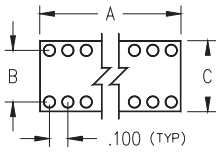


*For Electrical, Mechanical & Enviromental Data, See pg. 4*

## Ordering Information

*XX=Plating Code See Below*

| Total number of pins | A | B | C | Quantity per tube | Length = .136 (.039 Min. Mounting Hole) | Length = .136 (.039 Min. Mounting Hole) | Length = .170 (.039 Min. Mounting Hole) |
|---|---|---|---|---|---|---|---|
| 10 | 0.5 | 0.2 | 0.3 | 40 | 614-XX-210-31-012000 | 614-XX-210-31-002000 | 614-XX-210-31-018000 |
| 4 | 0.2 | 0.3 | 0.4 | 102 | 614-XX-304-31-012000 | 614-XX-304-31-002000 | 614-XX-304-31-018000 |
| 6 | 0.3 | 0.3 | 0.4 | 67 | 614-XX-306-31-012000 | 614-XX-306-31-002000 | 614-XX-306-31-018000 |
| 8 | 0.4 | 0.3 | 0.4 | 50 | 614-XX-308-31-012000 | 614-XX-308-31-002000 | 614-XX-308-31-018000 |
| 10 | 0.5 | 0.3 | 0.4 | 40 | 614-XX-310-31-012000 | 614-XX-310-31-002000 | 614-XX-310-31-018000 |
| 14 | 0.7 | 0.3 | 0.4 | 28 | 614-XX-314-31-012000 | 614-XX-314-31-002000 | 614-XX-314-31-018000 |
| 16 | 0.8 | 0.3 | 0.4 | 25 | 614-XX-316-31-012000 | 614-XX-316-31-002000 | 614-XX-316-31-018000 |
| 18 | 0.9 | 0.3 | 0.4 | 22 | 614-XX-318-31-012000 | 614-XX-318-31-002000 | 614-XX-318-31-018000 |
| 20 | 1.0 | 0.3 | 0.4 | 20 | 614-XX-320-31-012000 | 614-XX-320-31-002000 | 614-XX-320-31-018000 |
| 22 | 1.1 | 0.3 | 0.4 | 18 | 614-XX-322-31-012000 | 614-XX-322-31-002000 | 614-XX-322-31-018000 |
| 24 | 1.2 | 0.3 | 0.4 | 16 | 614-XX-324-31-012000 | 614-XX-324-31-002000 | 614-XX-324-31-018000 |
| 28 | 1.4 | 0.3 | 0.4 | 14 | 614-XX-328-31-012000 | 614-XX-328-31-002000 | 614-XX-328-31-018000 |
| 20 | 1.0 | 0.4 | 0.5 | 20 | 614-XX-420-31-012000 | 614-XX-420-31-002000 | 614-XX-420-31-018000 |
| 22 | 1.1 | 0.4 | 0.5 | 18 | 614-XX-422-31-012000 | 614-XX-422-31-002000 | 614-XX-422-31-018000 |
| 24 | 1.2 | 0.4 | 0.5 | 16 | 614-XX-424-31-012000 | 614-XX-424-31-002000 | 614-XX-424-31-018000 |
| 28 | 1.4 | 0.4 | 0.5 | 14 | 614-XX-428-31-012000 | 614-XX-428-31-002000 | 614-XX-428-31-018000 |
| 32 | 1.6 | 0.4 | 0.5 | 12 | 614-XX-432-31-012000 | 614-XX-432-31-002000 | 614-XX-432-31-018000 |
| 24 | 1.2 | 0.6 | 0.7 | 16 | 614-XX-624-31-012000 | 614-XX-624-31-002000 | 614-XX-624-31-018000 |
| 28 | 1.4 | 0.6 | 0.7 | 14 | 614-XX-628-31-012000 | 614-XX-628-31-002000 | 614-XX-628-31-018000 |
| 32 | 1.6 | 0.6 | 0.7 | 12 | 614-XX-632-31-012000 | 614-XX-632-31-002000 | 614-XX-632-31-018000 |
| 36 | 1.8 | 0.6 | 0.7 | 11 | 614-XX-636-31-012000 | 614-XX-636-31-002000 | 614-XX-636-31-018000 |
| 40 | 2.0 | 0.6 | 0.7 | 10 | 614-XX-640-31-012000 | 614-XX-640-31-002000 | 614-XX-640-31-018000 |
| 42 | 2.1 | 0.6 | 0.7 | 9 | 614-XX-642-31-012000 | 614-XX-642-31-002000 | 614-XX-642-31-018000 |
| 48 | 2.4 | 0.6 | 0.7 | 8 | 614-XX-648-31-012000 | 614-XX-648-31-002000 | 614-XX-648-31-018000 |
| 50 | 2.5 | 0.6 | 0.7 | 8 | 614-XX-650-31-012000 | 614-XX-650-31-002000 | 614-XX-650-31-018000 |
| 52 | 2.6 | 0.6 | 0.7 | 7 | 614-XX-652-31-012000 | 614-XX-652-31-002000 | 614-XX-652-31-018000 |
| 50 | 2.5 | 0.9 | 1.0 | 8 | 614-XX-950-31-012000 | 614-XX-950-31-002000 | 614-XX-950-31-018000 |
| 52 | 2.6 | 0.9 | 1.0 | 7 | 614-XX-952-31-012000 | 614-XX-952-31-002000 | 614-XX-952-31-018000 |
| 64 | 3.2 | 0.9 | 1.0 | 6 | 614-XX-964-31-012000 | 614-XX-964-31-002000 | 614-XX-964-31-018000 |

| SPECIFY PLATING CODE XX= | | 93 | | 43◇ | |
|---|---|---|---|---|---|
| Sleeve (Pin) | | 200μ" Sn/Pb | | 200μ" Sn | |
| Contact (Clip) | | 30μ" Au | | 30μ" Au | |

*For RoHS compliance select ◇ plating code.*

# DUAL-IN-LINE PIN HEADERS
## Solder Tail and Wrapost
## Open Frame

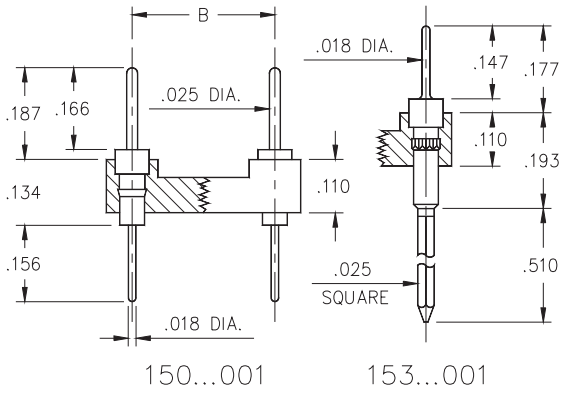


- Series 150 DIL Headers are equipped with .025" dia. pins MM #0290. See page 182 for details.
- Series 153 DIL Headers have 3-level wraposts MM #5301. See page 194 for details.
- Both series have .018" dia. solder tails which are pluggable into standard contacts.
- Insulators are high temperature thermoplastic.

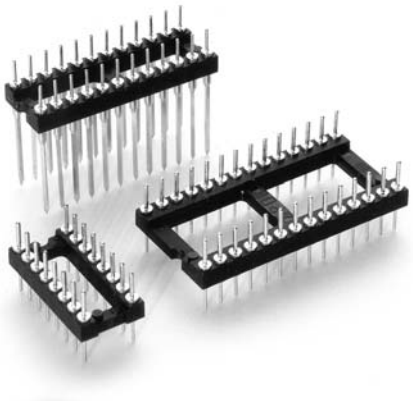

## Ordering Information

| Total number of pins | A | B | C | Quantity per tube | Solder Tail | 3 Level Wrapost |
|---|---|---|---|---|---|---|
| 10 | 0.5 | 0.2 | 0.3 | 40 | 150-XX-210-00-001000 | 153-10-210-00-001000 |
| 4 | 0.2 | 0.3 | 0.4 | 102 | 150-XX-304-00-001000 | 153-10-304-00-001000 |
| 6 | 0.3 | 0.3 | 0.4 | 67 | 150-XX-306-00-001000 | 153-10-306-00-001000 |
| 8 | 0.4 | 0.3 | 0.4 | 50 | 150-XX-308-00-001000 | 153-10-308-00-001000 |
| 10 | 0.5 | 0.3 | 0.4 | 40 | 150-XX-310-00-001000 | 153-10-310-00-001000 |
| 14 | 0.7 | 0.3 | 0.4 | 29 | 150-XX-314-00-001000 | 153-10-314-00-001000 |
| 16 | 0.8 | 0.3 | 0.4 | 25 | 150-XX-316-00-001000 | 153-10-316-00-001000 |
| 18 | 0.9 | 0.3 | 0.4 | 22 | 150-XX-318-00-001000 | 153-10-318-00-001000 |
| 20 | 1.0 | 0.3 | 0.4 | 20 | 150-XX-320-00-001000 | 153-10-320-00-001000 |
| 22 | 1.1 | 0.3 | 0.4 | 18 | 150-XX-322-00-001000 | 153-10-322-00-001000 |
| 24 | 1.2 | 0.3 | 0.4 | 16 | 150-XX-324-00-001000 | 153-10-324-00-001000 |
| 28 | 1.4 | 0.3 | 0.4 | 14 | 150-XX-328-00-001000 | 153-10-328-00-001000 |
| 20 | 1.0 | 0.4 | 0.5 | 20 | 150-XX-420-00-001000 | 153-10-420-00-001000 |
| 22 | 1.1 | 0.4 | 0.5 | 18 | 150-XX-422-00-001000 | 153-10-422-00-001000 |
| 24 | 1.2 | 0.4 | 0.5 | 16 | 150-XX-424-00-001000 | 153-10-424-00-001000 |
| 28 | 1.4 | 0.4 | 0.5 | 14 | 150-XX-428-00-001000 | 153-10-428-00-001000 |
| 32 | 1.6 | 0.4 | 0.5 | 12 | 150-XX-432-00-001000 | 153-10-432-00-001000 |
| 24 | 1.2 | 0.6 | 0.7 | 16 | 150-XX-624-00-001000 | 153-10-624-00-001000 |
| 28 | 1.4 | 0.6 | 0.7 | 14 | 150-XX-628-00-001000 | 153-10-628-00-001000 |
| 32 | 1.6 | 0.6 | 0.7 | 12 | 150-XX-632-00-001000 | 153-10-632-00-001000 |
| 36 | 1.8 | 0.6 | 0.7 | 11 | 150-XX-636-00-001000 | 153-10-636-00-001000 |
| 40 | 2.0 | 0.6 | 0.7 | 10 | 150-XX-640-00-001000 | 153-10-640-00-001000 |
| 42 | 2.1 | 0.6 | 0.7 | 9 | 150-XX-642-00-001000 | 153-10-642-00-001000 |
| 48 | 2.4 | 0.6 | 0.7 | 8 | 150-XX-648-00-001000 | 153-10-648-00-001000 |
| 50 | 2.5 | 0.6 | 0.7 | 8 | 150-XX-650-00-001000 | 153-10-650-00-001000 |
| 52 | 2.6 | 0.6 | 0.7 | 7 | 150-XX-652-00-001000 | 153-10-652-00-001000 |
| 50 | 2.5 | 0.9 | 1.0 | 8 | 150-XX-950-00-001000 | 153-10-950-00-001000 |
| 52 | 2.6 | 0.9 | 1.0 | 7 | 150-XX-952-00-001000 | 153-10-952-00-001000 |
| 64 | 3.2 | 0.9 | 1.0 | 6 | 150-XX-964-00-001000 | 153-10-964-00-001000 |

| SPECIFY PLATING CODE XX= | 10◇ | 90 | 40◇ |
|---|---|---|---|
| Pin Plating | 10μ" Au | 200μ" Sn/Pb | 200μ" Sn |

RoHS 2002/95/EC

*For RoHS compliance select ◇ plating code.*

*For Electrical, Mechanical & Enviromental Data, See pg. 4*

*XX=Plating Code See Below*

# DUAL-IN-LINE SLOTTED HEADERS
## Solder Tail and Wrapost
## Open Frame

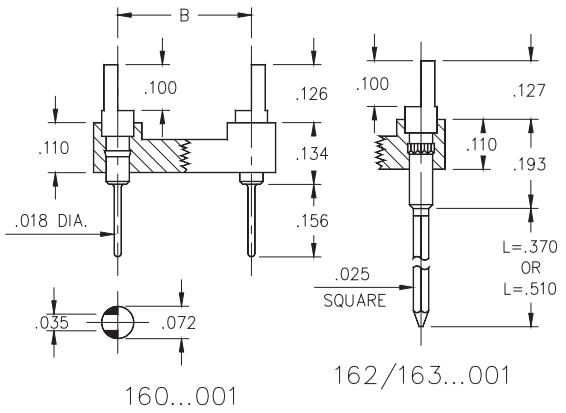


- Series 160, 162, and 163 DIL Headers are equipped with slotted heads to accept wires or component leads.
- Series 160 terminations are pluggable .018" dia. solder tails MM #0282, See page 183 for details. Series 162 and 163 terminations are two or three level wraposts MM #1106. See page 195 for details.
- Insulators are high temperature thermoplastic.

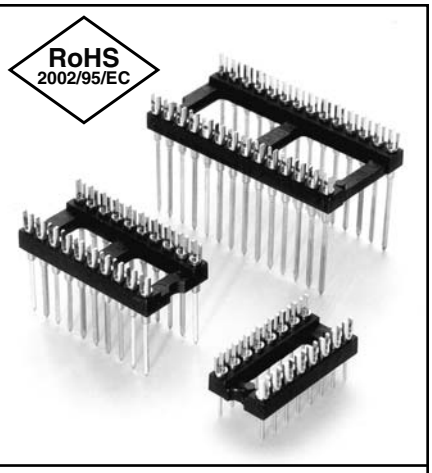


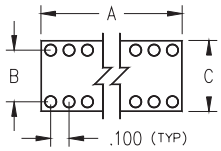


*For Electrical, Mechanical & Enviromental Data, See pg. 4*

## Ordering Information

*XX=Plating Code See Below*

| Total number of pins | A | B | C | Quantity per tube | Solder Tail | 2 Level Wrapost L = .370 | 3 Level Wrapost L = .510 |
|---|---|---|---|---|---|---|---|
| 10 | 0.5 | 0.2 | 0.3 | 41 | 160-XX-210-00-001000 | 162-10-210-00-001000 | 163-10-210-00-001000 |
| 4 | 0.2 | 0.3 | 0.4 | 102 | 160-XX-304-00-001000 | 162-10-304-00-001000 | 163-10-304-00-001000 |
| 6 | 0.3 | 0.3 | 0.4 | 67 | 160-XX-306-00-001000 | 162-10-306-00-001000 | 163-10-306-00-001000 |
| 8 | 0.4 | 0.3 | 0.4 | 50 | 160-XX-308-00-001000 | 162-10-308-00-001000 | 163-10-308-00-001000 |
| 10 | 0.5 | 0.3 | 0.4 | 40 | 160-XX-310-00-001000 | 162-10-310-00-001000 | 163-10-310-00-001000 |
| 14 | 0.7 | 0.3 | 0.4 | 28 | 160-XX-314-00-001000 | 162-10-314-00-001000 | 163-10-314-00-001000 |
| 16 | 0.8 | 0.3 | 0.4 | 25 | 160-XX-316-00-001000 | 162-10-316-00-001000 | 163-10-316-00-001000 |
| 18 | 0.9 | 0.3 | 0.4 | 22 | 160-XX-318-00-001000 | 162-10-318-00-001000 | 163-10-318-00-001000 |
| 20 | 1.0 | 0.3 | 0.4 | 20 | 160-XX-320-00-001000 | 162-10-320-00-001000 | 163-10-320-00-001000 |
| 22 | 1.0 | 0.3 | 0.4 | 18 | 160-XX-322-00-001000 | 162-10-322-00-001000 | 163-10-322-00-001000 |
| 24 | 1.2 | 0.3 | 0.4 | 16 | 160-XX-324-00-001000 | 162-10-324-00-001000 | 163-10-324-00-001000 |
| 28 | 1.4 | 0.3 | 0.4 | 14 | 160-XX-328-00-001000 | 162-10-328-00-001000 | 163-10-328-00-001000 |
| 20 | 1.0 | 0.4 | 0.5 | 20 | 160-XX-420-00-001000 | 162-10-420-00-001000 | 163-10-420-00-001000 |
| 22 | 1.1 | 0.4 | 0.5 | 18 | 160-XX-422-00-001000 | 162-10-422-00-001000 | 163-10-422-00-001000 |
| 24 | 1.2 | 0.4 | 0.5 | 16 | 160-XX-424-00-001000 | 162-10-424-00-001000 | 163-10-424-00-001000 |
| 28 | 1.4 | 0.4 | 0.5 | 14 | 160-XX-428-00-001000 | 162-10-428-00-001000 | 163-10-428-00-001000 |
| 32 | 1.6 | 0.4 | 0.5 | 12 | 160-XX-432-00-001000 | 162-10-432-00-001000 | 163-10-432-00-001000 |
| 24 | 1.2 | 0.6 | 0.7 | 16 | 160-XX-624-00-001000 | 162-10-624-00-001000 | 163-10-624-00-001000 |
| 28 | 1.4 | 0.6 | 0.7 | 14 | 160-XX-628-00-001000 | 162-10-628-00-001000 | 163-10-628-00-001000 |
| 32 | 1.6 | 0.6 | 0.7 | 12 | 160-XX-632-00-001000 | 162-10-632-00-001000 | 163-10-632-00-001000 |
| 36 | 1.8 | 0.6 | 0.7 | 11 | 160-XX-636-00-001000 | 162-10-636-00-001000 | 163-10-636-00-001000 |
| 40 | 2.0 | 0.6 | 0.7 | 10 | 160-XX-640-00-001000 | 162-10-640-00-001000 | 163-10-640-00-001000 |
| 42 | 2.1 | 0.6 | 0.7 | 9 | 160-XX-642-00-001000 | 162-10-642-00-001000 | 163-10-642-00-001000 |
| 48 | 2.4 | 0.6 | 0.7 | 8 | 160-XX-648-00-001000 | 162-10-648-00-001000 | 163-10-648-00-001000 |
| 50 | 2.5 | 0.6 | 0.7 | 8 | 160-XX-650-00-001000 | 162-10-650-00-001000 | 163-10-650-00-001000 |
| 52 | 2.6 | 0.6 | 0.7 | 7 | 160-XX-652-00-001000 | 162-10-652-00-001000 | 163-10-652-00-001000 |
| 50 | 2.5 | 0.9 | 1.0 | 8 | 160-XX-950-00-001000 | 162-10-950-00-001000 | 163-10-950-00-001000 |
| 52 | 2.6 | 0.9 | 1.0 | 7 | 160-XX-952-00-001000 | 162-10-952-00-001000 | 163-10-952-00-001000 |
| 64 | 3.2 | 0.9 | 1.0 | 6 | 160-XX-964-00-001000 | 162-10-964-00-001000 | 163-10-964-00-001000 |

*For RoHS compliance select ◇ plating code.*

| SPECIFY PLATING CODE XX= | 10◇ | 90 | 40◇ |
|---|---|---|---|
| Pin Plating | 10μ" Au | 200μ" Sn/Pb | 200μ" Sn |

# DUAL-IN-LINE TURRET HEADERS
## Solder Tail and Wrapost
## Open Frame

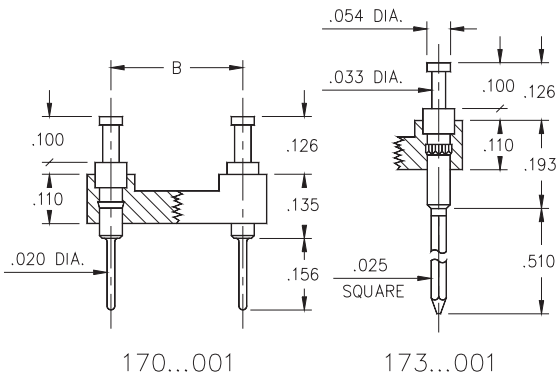


- Series 170 &173 DIL headers are equipped with turret heads for wiring applications.
- Series 170 terminations are pluggable .020" dia. solder tails MM #0700, See page 183 for details. Series 173 terminations are three level wraposts MM #0730. See page 195 for details.
- Insulators are high temperature thermoplastic.

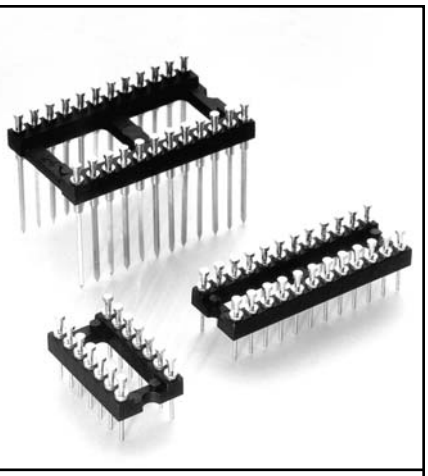

## Ordering Information

| Total number of pins | A | B | C | Quantity per tube | Solder Tail | 3 Level Wrapost |
|---|---|---|---|---|---|---|
| 10 | 0.5 | 0.2 | 0.3 | 41 | 170-XX-210-00-001000 | 173-10-210-00-001000 |
| 4 | 0.2 | 0.3 | 0.4 | 102 | 170-XX-304-00-001000 | 173-10-304-00-001000 |
| 6 | 0.3 | 0.3 | 0.4 | 67 | 170-XX-306-00-001000 | 173-10-306-00-001000 |
| 8 | 0.4 | 0.3 | 0.4 | 50 | 170-XX-308-00-001000 | 173-10-308-00-001000 |
| 10 | 0.5 | 0.3 | 0.4 | 40 | 170-XX-310-00-001000 | 173-10-310-00-001000 |
| 14 | 0.7 | 0.3 | 0.4 | 28 | 170-XX-314-00-001000 | 173-10-314-00-001000 |
| 16 | 0.8 | 0.3 | 0.4 | 25 | 170-XX-316-00-001000 | 173-10-316-00-001000 |
| 18 | 0.9 | 0.3 | 0.4 | 22 | 170-XX-318-00-001000 | 173-10-318-00-001000 |
| 20 | 1.0 | 0.3 | 0.4 | 20 | 170-XX-320-00-001000 | 173-10-320-00-001000 |
| 22 | 1.1 | 0.3 | 0.4 | 18 | 170-XX-322-00-001000 | 173-10-322-00-001000 |
| 24 | 1.2 | 0.3 | 0.4 | 16 | 170-XX-324-00-001000 | 173-10-324-00-001000 |
| 28 | 1.4 | 0.3 | 0.4 | 14 | 170-XX-328-00-001000 | 173-10-328-00-001000 |
| 20 | 1.0 | 0.4 | 0.5 | 20 | 170-XX-420-00-001000 | 173-10-420-00-001000 |
| 22 | 1.1 | 0.4 | 0.5 | 18 | 170-XX-422-00-001000 | 173-10-422-00-001000 |
| 24 | 1.2 | 0.4 | 0.5 | 16 | 170-XX-424-00-001000 | 173-10-424-00-001000 |
| 28 | 1.4 | 0.4 | 0.5 | 14 | 170-XX-428-00-001000 | 173-10-428-00-001000 |
| 32 | 1.6 | 0.4 | 0.5 | 12 | 170-XX-432-00-001000 | 173-10-432-00-001000 |
| 24 | 1.2 | 0.6 | 0.7 | 16 | 170-XX-624-00-001000 | 173-10-624-00-001000 |
| 28 | 1.4 | 0.6 | 0.7 | 14 | 170-XX-628-00-001000 | 173-10-628-00-001000 |
| 32 | 1.6 | 0.6 | 0.7 | 12 | 170-XX-632-00-001000 | 173-10-632-00-001000 |
| 36 | 1.8 | 0.6 | 0.7 | 11 | 170-XX-636-00-001000 | 173-10-636-00-001000 |
| 40 | 2.0 | 0.6 | 0.7 | 10 | 170-XX-640-00-001000 | 173-10-640-00-001000 |
| 42 | 2.1 | 0.6 | 0.7 | 9 | 170-XX-642-00-001000 | 173-10-642-00-001000 |
| 48 | 2.4 | 0.6 | 0.7 | 8 | 170-XX-648-00-001000 | 173-10-648-00-001000 |
| 50 | 2.5 | 0.6 | 0.7 | 8 | 170-XX-650-00-001000 | 173-10-650-00-001000 |
| 52 | 2.6 | 0.6 | 0.7 | 7 | 170-XX-652-00-001000 | 173-10-652-00-001000 |
| 50 | 2.5 | 0.9 | 1.0 | 8 | 170-XX-950-00-001000 | 173-10-950-00-001000 |
| 52 | 2.6 | 0.9 | 1.0 | 7 | 170-XX-952-00-001000 | 173-10-952-00-001000 |
| 64 | 3.2 | 0.9 | 1.0 | 6 | 170-XX-964-00-001000 | 173-10-964-00-001000 |

| SPECIFY PLATING CODE XX= | 10◇ | 90 | 40◇ |
|---|---|---|---|
| Pin Plating | 10μ" Au | 200μ" Sn/Pb | 200μ" Sn |

RoHS 2002/95/EC

*For RoHS compliance select ◇ plating code.*

*For Electrical, Mechanical & Enviromental Data, See pg. 4*

*XX=Plating Code See Below*

# DUAL-IN-LINE SOLDER CUP HEADERS
## Solder Tail and Wrapost
## Open Frame



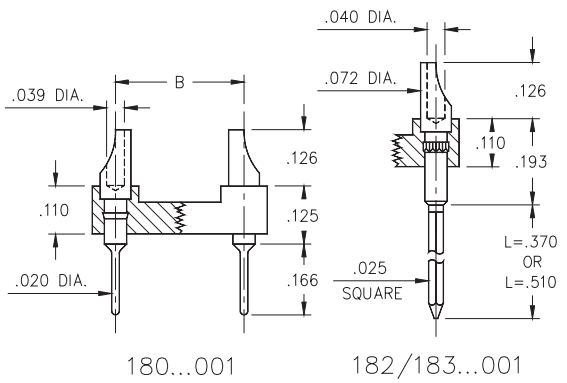


- Series 180, 182, and 183 DIL Headers are equipped with solder cups for wiring applications.
- Series 180 terminations are pluggable .020" dia. solder tails MM #8000, See page 183 for details. Series 182 and 183 terminations are two or three level wraposts MM #8301. See page 194 for details.
- Insulators are high temperature thermoplastic.

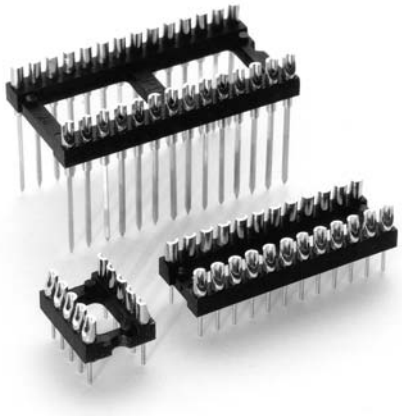

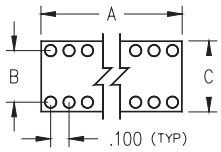


*For Electrical, Mechanical & Enviromental Data, See pg. 4*

## Ordering Information

RoHS 2002/95/EC

| Total number of pins | A | B | C | Quantity per tube | Solder Tail | 2 Level Wrapost L = .370 | 3 Level Wrapost L = .510 |
|---|---|---|---|---|---|---|---|
| 10 | 0.5 | 0.2 | 0.3 | 41 | 180-10-210-00-001000 | 182-10-210-00-001000 | 183-10-210-00-001000 |
| 4 | 0.2 | 0.3 | 0.4 | 102 | 180-10-304-00-001000 | 182-10-304-00-001000 | 183-10-304-00-001000 |
| 6 | 0.3 | 0.3 | 0.4 | 67 | 180-10-306-00-001000 | 182-10-306-00-001000 | 183-10-306-00-001000 |
| 8 | 0.4 | 0.3 | 0.4 | 50 | 180-10-308-00-001000 | 182-10-308-00-001000 | 183-10-308-00-001000 |
| 10 | 0.5 | 0.3 | 0.4 | 40 | 180-10-310-00-001000 | 182-10-310-00-001000 | 183-10-310-00-001000 |
| 14 | 0.7 | 0.3 | 0.4 | 28 | 180-10-314-00-001000 | 182-10-314-00-001000 | 183-10-314-00-001000 |
| 16 | 0.8 | 0.3 | 0.4 | 25 | 180-10-316-00-001000 | 182-10-316-00-001000 | 183-10-316-00-001000 |
| 18 | 0.9 | 0.3 | 0.4 | 22 | 180-10-318-00-001000 | 182-10-318-00-001000 | 183-10-318-00-001000 |
| 20 | 1.0 | 0.3 | 0.4 | 20 | 180-10-320-00-001000 | 182-10-320-00-001000 | 183-10-320-00-001000 |
| 22 | 1.1 | 0.3 | 0.4 | 18 | 180-10-322-00-001000 | 182-10-322-00-001000 | 183-10-322-00-001000 |
| 24 | 1.2 | 0.3 | 0.4 | 16 | 180-10-324-00-001000 | 182-10-324-00-001000 | 183-10-324-00-001000 |
| 28 | 1.4 | 0.3 | 0.4 | 14 | 180-10-328-00-001000 | 182-10-328-00-001000 | 183-10-328-00-001000 |
| 20 | 1.0 | 0.4 | 0.5 | 20 | 180-10-420-00-001000 | 182-10-420-00-001000 | 183-10-420-00-001000 |
| 22 | 1.1 | 0.4 | 0.5 | 18 | 180-10-422-00-001000 | 182-10-422-00-001000 | 183-10-422-00-001000 |
| 24 | 1.2 | 0.4 | 0.5 | 16 | 180-10-424-00-001000 | 182-10-424-00-001000 | 183-10-424-00-001000 |
| 28 | 1.4 | 0.4 | 0.5 | 14 | 180-10-428-00-001000 | 182-10-428-00-001000 | 183-10-428-00-001000 |
| 32 | 1.6 | 0.4 | 0.5 | 12 | 180-10-432-00-001000 | 182-10-432-00-001000 | 183-10-432-00-001000 |
| 24 | 1.2 | 0.6 | 0.7 | 16 | 180-10-624-00-001000 | 182-10-624-00-001000 | 183-10-624-00-001000 |
| 28 | 1.4 | 0.6 | 0.7 | 14 | 180-10-628-00-001000 | 182-10-628-00-001000 | 183-10-628-00-001000 |
| 32 | 1.6 | 0.6 | 0.7 | 12 | 180-10-632-00-001000 | 182-10-632-00-001000 | 183-10-632-00-001000 |
| 36 | 1.8 | 0.6 | 0.7 | 11 | 180-10-636-00-001000 | 182-10-636-00-001000 | 183-10-636-00-001000 |
| 40 | 2.0 | 0.6 | 0.7 | 10 | 180-10-640-00-001000 | 182-10-640-00-001000 | 183-10-640-00-001000 |
| 42 | 2.1 | 0.6 | 0.7 | 9 | 180-10-642-00-001000 | 182-10-642-00-001000 | 183-10-642-00-001000 |
| 48 | 2.4 | 0.6 | 0.7 | 8 | 180-10-648-00-001000 | 182-10-648-00-001000 | 183-10-648-00-001000 |
| 50 | 2.5 | 0.6 | 0.7 | 8 | 180-10-650-00-001000 | 182-10-650-00-001000 | 183-10-650-00-001000 |
| 52 | 2.6 | 0.6 | 0.7 | 7 | 180-10-652-00-001000 | 182-10-652-00-001000 | 183-10-652-00-001000 |
| 50 | 2.5 | 0.9 | 1.0 | 8 | 180-10-950-00-001000 | 182-10-950-00-001000 | 183-10-950-00-001000 |
| 52 | 2.6 | 0.9 | 1.0 | 7 | 180-10-952-00-001000 | 182-10-952-00-001000 | 183-10-952-00-001000 |
| 64 | 3.2 | 0.9 | 1.0 | 6 | 180-10-964-00-001000 | 182-10-964-00-001000 | 183-10-964-00-001000 |

*For RoHS compliance select ◇ plating code.*

| | | | | |
|---|---|---|---|---|
| PLATING CODE = | 10◇ | | | |
| Pin Plating | 10μ" Au | | | |

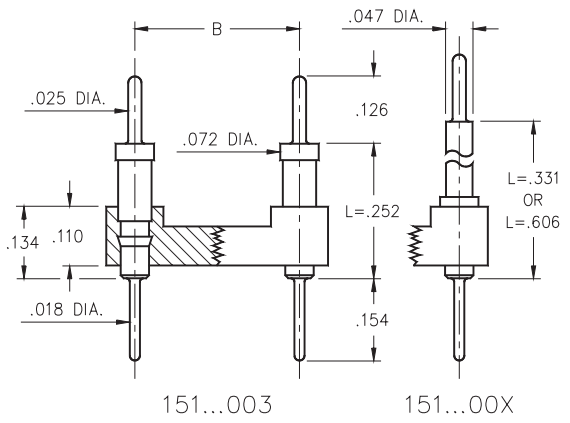


- Series 151 DIL Headers combine .025" dia. tails with pluggable .018" dia. solder tails.
- Series:
  151...003 use MM #5503 pins
  151...004 use MM #5504 pins
  151...005 use MM #5505 pins
  See page 181 for details.
- Insulators are high temperature thermoplastic.

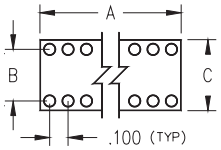


For Electrical, Mechanical & Enviromental Data, See pg. 4

## Ordering Information

RoHS 2002/95/EC

| Total number of pins | A | B | C | Quantity per tube | L = .252 | L = .331 | L = .606 |
|---|---|---|---|---|---|---|---|
| 10 | 0.5 | 0.2 | 0.3 | 41 | 151-10-210-00-003000 | 151-10-210-00-004000 | 151-10-210-00-005000 |
| 4 | 0.2 | 0.3 | 0.4 | 102 | 151-10-304-00-003000 | 151-10-304-00-004000 | 151-10-304-00-005000 |
| 6 | 0.3 | 0.3 | 0.4 | 67 | 151-10-306-00-003000 | 151-10-306-00-004000 | 151-10-306-00-005000 |
| 8 | 0.4 | 0.3 | 0.4 | 50 | 151-10-308-00-003000 | 151-10-308-00-004000 | 151-10-308-00-005000 |
| 10 | 0.5 | 0.3 | 0.4 | 40 | 151-10-310-00-003000 | 151-10-310-00-004000 | 151-10-310-00-005000 |
| 14 | 0.7 | 0.3 | 0.4 | 28 | 151-10-314-00-003000 | 151-10-314-00-004000 | 151-10-314-00-005000 |
| 16 | 0.8 | 0.3 | 0.4 | 25 | 151-10-316-00-003000 | 151-10-316-00-004000 | 151-10-316-00-005000 |
| 18 | 0.9 | 0.3 | 0.4 | 22 | 151-10-318-00-003000 | 151-10-318-00-004000 | 151-10-318-00-005000 |
| 20 | 1.0 | 0.3 | 0.4 | 20 | 151-10-320-00-003000 | 151-10-320-00-004000 | 151-10-320-00-005000 |
| 22 | 1.1 | 0.3 | 0.4 | 18 | 151-10-322-00-003000 | 151-10-322-00-004000 | 151-10-322-00-005000 |
| 24 | 1.2 | 0.3 | 0.4 | 16 | 151-10-324-00-003000 | 151-10-324-00-004000 | 151-10-324-00-005000 |
| 28 | 1.4 | 0.3 | 0.4 | 14 | 151-10-328-00-003000 | 151-10-328-00-004000 | 151-10-328-00-005000 |
| 20 | 1.0 | 0.4 | 0.5 | 20 | 151-10-420-00-003000 | 151-10-420-00-004000 | 151-10-420-00-005000 |
| 22 | 1.1 | 0.4 | 0.5 | 18 | 151-10-422-00-003000 | 151-10-422-00-004000 | 151-10-422-00-005000 |
| 24 | 1.2 | 0.4 | 0.5 | 16 | 151-10-424-00-003000 | 151-10-424-00-004000 | 151-10-424-00-005000 |
| 28 | 1.4 | 0.4 | 0.5 | 14 | 151-10-428-00-003000 | 151-10-428-00-004000 | 151-10-428-00-005000 |
| 32 | 1.6 | 0.4 | 0.5 | 12 | 151-10-432-00-003000 | 151-10-432-00-004000 | 151-10-432-00-005000 |
| 24 | 1.2 | 0.6 | 0.7 | 16 | 151-10-624-00-003000 | 151-10-624-00-004000 | 151-10-624-00-005000 |
| 28 | 1.4 | 0.6 | 0.7 | 14 | 151-10-628-00-003000 | 151-10-628-00-004000 | 151-10-628-00-005000 |
| 32 | 1.6 | 0.6 | 0.7 | 12 | 151-10-632-00-003000 | 151-10-632-00-004000 | 151-10-632-00-005000 |
| 36 | 1.8 | 0.6 | 0.7 | 11 | 151-10-636-00-003000 | 151-10-636-00-004000 | 151-10-636-00-005000 |
| 40 | 2.0 | 0.6 | 0.7 | 10 | 151-10-640-00-003000 | 151-10-640-00-004000 | 151-10-640-00-005000 |
| 42 | 2.1 | 0.6 | 0.7 | 9 | 151-10-642-00-003000 | 151-10-642-00-004000 | 151-10-642-00-005000 |
| 48 | 2.4 | 0.6 | 0.7 | 8 | 151-10-648-00-003000 | 151-10-648-00-004000 | 151-10-648-00-005000 |
| 50 | 2.5 | 0.6 | 0.7 | 8 | 151-10-650-00-003000 | 151-10-650-00-004000 | 151-10-650-00-005000 |
| 52 | 2.6 | 0.6 | 0.7 | 7 | 151-10-652-00-003000 | 151-10-652-00-004000 | 151-10-652-00-005000 |
| 50 | 2.5 | 0.9 | 1.0 | 8 | 151-10-950-00-003000 | 151-10-950-00-004000 | 151-10-950-00-005000 |
| 52 | 2.6 | 0.9 | 1.0 | 7 | 151-10-952-00-003000 | 151-10-952-00-004000 | 151-10-952-00-005000 |
| 64 | 3.2 | 0.9 | 1.0 | 6 | 151-10-964-00-003000 | 151-10-964-00-004000 | 151-10-964-00-005000 |

For RoHS compliance select ◇ plating code.

| PLATING CODE = | 10◇ | | | |
|---|---|---|---|---|
| Pin Plating | 10μ" Au | | | |

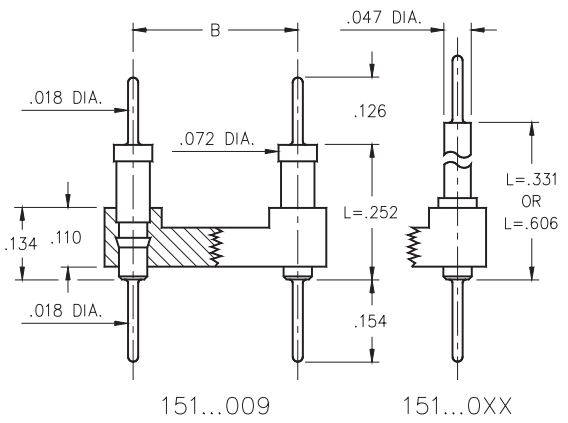


- Series 151 DIL Headers use .018" dia. solder tails at both ends make this header entirely pluggable.
- Series:
  151...009 use MM #5509 pins
  151...010 use MM #5510 pins
  151...011 use MM #5511 pins
  See pages 179 and 181 for details.
- Insulators are high temperature thermoplastic.

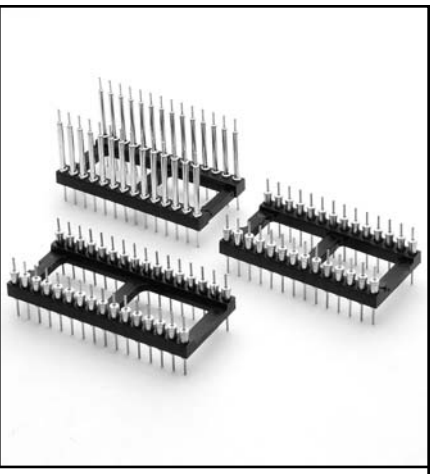

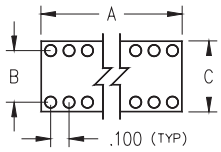


*For Electrical, Mechanical & Enviromental Data, See pg. 4*

## Ordering Information

RoHS 2002/95/EC

| Total number of pins | A | B | C | Quantity per tube | L = .252 | L = .331 | L = .606 |
|---|---|---|---|---|---|---|---|
| 10 | 0.5 | 0.2 | 0.3 | 41 | 151-10-210-00-009000 | 151-10-210-00-010000 | 151-10-210-00-011000 |
| 4 | 0.2 | 0.3 | 0.4 | 102 | 151-10-304-00-009000 | 151-10-304-00-010000 | 151-10-304-00-011000 |
| 6 | 0.3 | 0.3 | 0.4 | 67 | 151-10-306-00-009000 | 151-10-306-00-010000 | 151-10-306-00-011000 |
| 8 | 0.4 | 0.3 | 0.4 | 50 | 151-10-308-00-009000 | 151-10-308-00-010000 | 151-10-308-00-011000 |
| 10 | 0.5 | 0.3 | 0.4 | 40 | 151-10-310-00-009000 | 151-10-310-00-010000 | 151-10-310-00-011000 |
| 14 | 0.7 | 0.3 | 0.4 | 28 | 151-10-314-00-009000 | 151-10-314-00-010000 | 151-10-314-00-011000 |
| 16 | 0.8 | 0.3 | 0.4 | 25 | 151-10-316-00-009000 | 151-10-316-00-010000 | 151-10-316-00-011000 |
| 18 | 0.9 | 0.3 | 0.4 | 22 | 151-10-318-00-009000 | 151-10-318-00-010000 | 151-10-318-00-011000 |
| 20 | 1.0 | 0.3 | 0.4 | 20 | 151-10-320-00-009000 | 151-10-320-00-010000 | 151-10-320-00-011000 |
| 22 | 1.1 | 0.3 | 0.4 | 18 | 151-10-322-00-009000 | 151-10-322-00-010000 | 151-10-322-00-011000 |
| 24 | 1.2 | 0.3 | 0.4 | 16 | 151-10-324-00-009000 | 151-10-324-00-010000 | 151-10-324-00-011000 |
| 28 | 1.4 | 0.3 | 0.4 | 14 | 151-10-328-00-009000 | 151-10-328-00-010000 | 151-10-328-00-011000 |
| 20 | 1.0 | 0.4 | 0.5 | 20 | 151-10-420-00-009000 | 151-10-420-00-010000 | 151-10-420-00-011000 |
| 22 | 1.1 | 0.4 | 0.5 | 18 | 151-10-422-00-009000 | 151-10-422-00-010000 | 151-10-422-00-011000 |
| 24 | 1.2 | 0.4 | 0.5 | 16 | 151-10-424-00-009000 | 151-10-424-00-010000 | 151-10-424-00-011000 |
| 28 | 1.4 | 0.4 | 0.5 | 14 | 151-10-428-00-009000 | 151-10-428-00-010000 | 151-10-428-00-011000 |
| 32 | 1.6 | 0.4 | 0.5 | 12 | 151-10-432-00-009000 | 151-10-432-00-010000 | 151-10-432-00-011000 |
| 24 | 1.2 | 0.6 | 0.7 | 16 | 151-10-624-00-009000 | 151-10-624-00-010000 | 151-10-624-00-011000 |
| 28 | 1.4 | 0.6 | 0.7 | 14 | 151-10-628-00-009000 | 151-10-628-00-010000 | 151-10-628-00-011000 |
| 32 | 1.6 | 0.6 | 0.7 | 12 | 151-10-632-00-009000 | 151-10-632-00-010000 | 151-10-632-00-011000 |
| 36 | 1.8 | 0.6 | 0.7 | 11 | 151-10-636-00-009000 | 151-10-636-00-010000 | 151-10-636-00-011000 |
| 40 | 2.0 | 0.6 | 0.7 | 10 | 151-10-640-00-009000 | 151-10-640-00-010000 | 151-10-640-00-011000 |
| 42 | 2.1 | 0.6 | 0.7 | 9 | 151-10-642-00-009000 | 151-10-642-00-010000 | 151-10-642-00-011000 |
| 48 | 2.4 | 0.6 | 0.7 | 8 | 151-10-648-00-009000 | 151-10-648-00-010000 | 151-10-648-00-011000 |
| 50 | 2.5 | 0.6 | 0.7 | 8 | 151-10-650-00-009000 | 151-10-650-00-010000 | 151-10-650-00-011000 |
| 52 | 2.6 | 0.6 | 0.7 | 7 | 151-10-652-00-009000 | 151-10-652-00-010000 | 151-10-652-00-011000 |
| 50 | 2.5 | 0.9 | 1.0 | 8 | 151-10-950-00-009000 | 151-10-950-00-010000 | 151-10-950-00-011000 |
| 52 | 2.6 | 0.9 | 1.0 | 7 | 151-10-952-00-009000 | 151-10-952-00-010000 | 151-10-952-00-011000 |
| 64 | 3.2 | 0.9 | 1.0 | 6 | 151-10-964-00-009000 | 151-10-964-00-010000 | 151-10-964-00-011000 |

*For RoHS compliance select ◇ plating code.*

| PLATING CODE = | 10◇ | | | |
|---|---|---|---|---|
| Pin Plating | 10μ" Au | | | |

# DUAL-IN-LINE PIN HEADERS
## Interconnect
## Open Frame

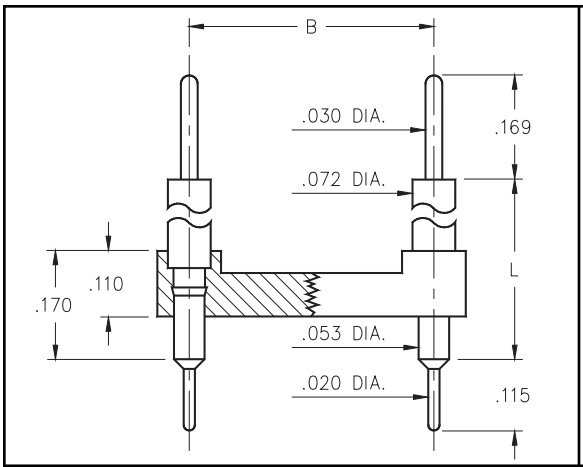


- Series 134 DIL Headers combine .030" diameter pins with pluggable .020" diameter solder tails.
- Series:
  134...020 use MM #3402 pins
  134...010 use MM #3401 pins
  134...050 use MM #3405 pins
  134...000 use MM #3400 pins
  134...100 use MM #3410 pins
  See pages 182 for details.
- Insulators are high temperature thermoplastic.

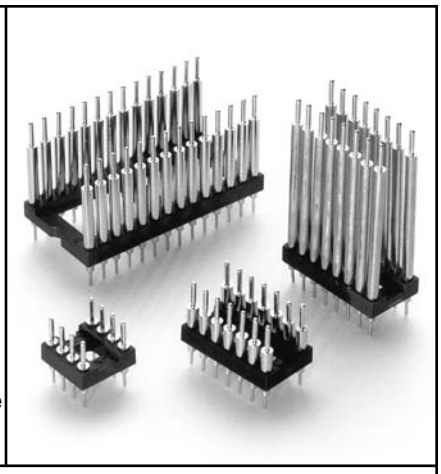

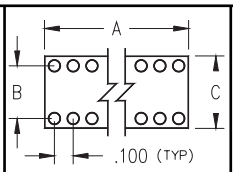


For Electrical, Mechanical & Enviromental Data, See pg. 4

## Ordering Information

RoHS 2002/95/EC

| Total number of pins | A | B | C | Quantity per tube | L = .190 | L = .236 | L = .315 | L = .605 | L = 1.070 |
|---|---|---|---|---|---|---|---|---|---|
| 10 | 0.5 | 0.2 | 0.3 | 41 | 134-10-210-00-020000 | 134-10-210-00-010000 | 134-10-210-00-050000 | 134-10-210-00-000000 | 134-10-210-00-100000 |
| 4 | 0.2 | 0.3 | 0.4 | 102 | 134-10-304-00-020000 | 134-10-304-00-010000 | 134-10-304-00-050000 | 134-10-304-00-000000 | 134-10-304-00-100000 |
| 6 | 0.3 | 0.3 | 0.4 | 67 | 134-10-306-00-020000 | 134-10-306-00-010000 | 134-10-306-00-050000 | 134-10-306-00-000000 | 134-10-306-00-100000 |
| 8 | 0.4 | 0.3 | 0.4 | 50 | 134-10-308-00-020000 | 134-10-308-00-010000 | 134-10-308-00-050000 | 134-10-308-00-000000 | 134-10-308-00-100000 |
| 10 | 0.5 | 0.3 | 0.4 | 40 | 134-10-310-00-020000 | 134-10-310-00-010000 | 134-10-310-00-050000 | 134-10-310-00-000000 | 134-10-310-00-100000 |
| 14 | 0.7 | 0.3 | 0.4 | 28 | 134-10-314-00-020000 | 134-10-314-00-010000 | 134-10-314-00-050000 | 134-10-314-00-000000 | 134-10-314-00-100000 |
| 16 | 0.8 | 0.3 | 0.4 | 25 | 134-10-316-00-020000 | 134-10-316-00-010000 | 134-10-316-00-050000 | 134-10-316-00-000000 | 134-10-316-00-100000 |
| 18 | 0.9 | 0.3 | 0.4 | 22 | 134-10-318-00-020000 | 134-10-318-00-010000 | 134-10-318-00-050000 | 134-10-318-00-000000 | 134-10-318-00-100000 |
| 20 | 1.0 | 0.3 | 0.4 | 20 | 134-10-320-00-020000 | 134-10-320-00-010000 | 134-10-320-00-050000 | 134-10-320-00-000000 | 134-10-320-00-100000 |
| 22 | 1.1 | 0.3 | 0.4 | 18 | 134-10-322-00-020000 | 134-10-322-00-010000 | 134-10-322-00-050000 | 134-10-322-00-000000 | 134-10-322-00-100000 |
| 24 | 1.2 | 0.3 | 0.4 | 16 | 134-10-324-00-020000 | 134-10-324-00-010000 | 134-10-324-00-050000 | 134-10-324-00-000000 | 134-10-324-00-100000 |
| 28 | 1.4 | 0.3 | 0.4 | 14 | 134-10-328-00-020000 | 134-10-328-00-010000 | 134-10-328-00-050000 | 134-10-328-00-000000 | 134-10-328-00-100000 |
| 20 | 1.0 | 0.4 | 0.5 | 20 | 134-10-420-00-020000 | 134-10-420-00-010000 | 134-10-420-00-050000 | 134-10-420-00-000000 | 134-10-420-00-100000 |
| 22 | 1.1 | 0.4 | 0.5 | 18 | 134-10-422-00-020000 | 134-10-422-00-010000 | 134-10-422-00-050000 | 134-10-422-00-000000 | 134-10-422-00-100000 |
| 24 | 1.2 | 0.4 | 0.5 | 16 | 134-10-424-00-020000 | 134-10-424-00-010000 | 134-10-424-00-050000 | 134-10-424-00-000000 | 134-10-424-00-100000 |
| 28 | 1.4 | 0.4 | 0.5 | 14 | 134-10-428-00-020000 | 134-10-428-00-010000 | 134-10-428-00-050000 | 134-10-428-00-000000 | 134-10-428-00-100000 |
| 32 | 1.6 | 0.4 | 0.5 | 12 | 134-10-432-00-020000 | 134-10-432-00-010000 | 134-10-432-00-050000 | 134-10-432-00-000000 | 134-10-432-00-100000 |
| 24 | 1.2 | 0.6 | 0.7 | 16 | 134-10-624-00-020000 | 134-10-624-00-010000 | 134-10-624-00-050000 | 134-10-624-00-000000 | 134-10-624-00-100000 |
| 28 | 1.4 | 0.6 | 0.7 | 14 | 134-10-628-00-020000 | 134-10-628-00-010000 | 134-10-628-00-050000 | 134-10-628-00-000000 | 134-10-628-00-100000 |
| 32 | 1.6 | 0.6 | 0.7 | 12 | 134-10-632-00-020000 | 134-10-632-00-010000 | 134-10-632-00-050000 | 134-10-632-00-000000 | 134-10-632-00-100000 |
| 36 | 1.8 | 0.6 | 0.7 | 11 | 134-10-636-00-020000 | 134-10-636-00-010000 | 134-10-636-00-050000 | 134-10-636-00-000000 | 134-10-636-00-100000 |
| 40 | 2.0 | 0.6 | 0.7 | 10 | 134-10-640-00-020000 | 134-10-640-00-010000 | 134-10-640-00-050000 | 134-10-640-00-000000 | 134-10-640-00-100000 |
| 42 | 2.1 | 0.6 | 0.7 | 9 | 134-10-642-00-020000 | 134-10-642-00-010000 | 134-10-642-00-050000 | 134-10-642-00-000000 | 134-10-642-00-100000 |
| 48 | 2.4 | 0.6 | 0.7 | 8 | 134-10-648-00-020000 | 134-10-648-00-010000 | 134-10-648-00-050000 | 134-10-648-00-000000 | 134-10-648-00-100000 |
| 50 | 2.5 | 0.6 | 0.7 | 8 | 134-10-650-00-020000 | 134-10-650-00-010000 | 134-10-650-00-050000 | 134-10-650-00-000000 | 134-10-650-00-100000 |
| 52 | 2.6 | 0.6 | 0.7 | 7 | 134-10-652-00-020000 | 134-10-652-00-010000 | 134-10-652-00-050000 | 134-10-652-00-000000 | 134-10-652-00-100000 |
| 50 | 2.5 | 0.9 | 1.0 | 8 | 134-10-950-00-020000 | 134-10-950-00-010000 | 134-10-950-00-050000 | 134-10-950-00-000000 | 134-10-950-00-100000 |
| 52 | 2.6 | 0.9 | 1.0 | 7 | 134-10-952-00-020000 | 134-10-952-00-010000 | 134-10-952-00-050000 | 134-10-952-00-000000 | 134-10-952-00-100000 |
| 64 | 3.2 | 0.9 | 1.0 | 6 | 134-10-964-00-020000 | 134-10-964-00-010000 | 134-10-964-00-050000 | 134-10-964-00-000000 | 134-10-964-00-100000 |

*For RoHS compliance select ◇ plating code.*

| PLATING CODE = | 10◇ | | | |
|---|---|---|---|---|
| Pin Plating | 10μ" Au | | | |

# DUAL-IN-LINE HEADERS
## Interconnect
## Open Frame

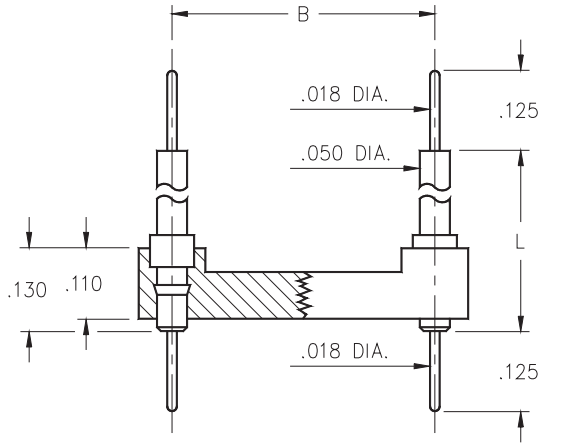


- Series 142 DIL Headers have double ended .018" diameter pluggable solder tails.
- Used to interconnect PC Boards with spacings of .210", .335", .585" or .835" Series 142 use MM #4259-1, -2, -3 or -4 pins. See page 179 for details.
- Insulators are high temperature thermoplastic.

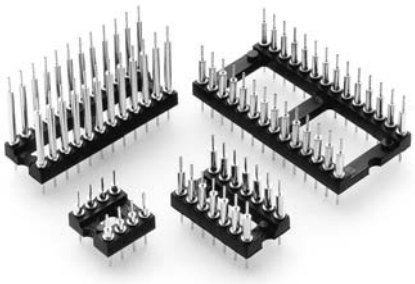

## Ordering Information

| Total number of pins | A | B | C | Quantity per tube | L=.210 | L=.335 | L=.585 | L=.835 |
|---|---|---|---|---|---|---|---|---|
| 6 | 0.3 | 0.3 | 0.4 | 67 | 142-XX-306-00-591000 | 142-XX-306-00-592000 | 142-XX-306-00-593000 | 142-XX-306-00-594000 |
| 8 | 0.4 | 0.3 | 0.4 | 50 | 142-XX-308-00-591000 | 142-XX-308-00-592000 | 142-XX-308-00-593000 | 142-XX-308-00-594000 |
| 14 | 0.7 | 0.3 | 0.4 | 29 | 142-XX-314-00-591000 | 142-XX-314-00-592000 | 142-XX-314-00-593000 | 142-XX-314-00-594000 |
| 16 | 0.8 | 0.3 | 0.4 | 25 | 142-XX-316-00-591000 | 142-XX-316-00-592000 | 142-XX-316-00-593000 | 142-XX-316-00-594000 |
| 18 | 0.9 | 0.3 | 0.4 | 22 | 142-XX-318-00-591000 | 142-XX-318-00-592000 | 142-XX-318-00-593000 | 142-XX-318-00-594000 |
| 20 | 1.0 | 0.3 | 0.4 | 40 | 142-XX-320-00-591000 | 142-XX-320-00-592000 | 142-XX-320-00-593000 | 142-XX-320-00-594000 |
| 24 | 1.2 | 0.3 | 0.4 | 17 | 142-XX-324-00-591000 | 142-XX-324-00-592000 | 142-XX-324-00-593000 | 142-XX-324-00-594000 |
| 22 | 1.1 | 0.4 | 0.5 | 14 | 142-XX-422-00-591000 | 142-XX-422-00-592000 | 142-XX-422-00-593000 | 142-XX-422-00-594000 |
| 24 | 1.2 | 0.6 | 0.7 | 16 | 142-XX-624-00-591000 | 142-XX-624-00-592000 | 142-XX-624-00-593000 | 142-XX-624-00-594000 |
| 28 | 1.4 | 0.6 | 0.7 | 14 | 142-XX-628-00-591000 | 142-XX-628-00-592000 | 142-XX-628-00-593000 | 142-XX-628-00-594000 |
| 32 | 1.6 | 0.6 | 0.7 | 12 | 142-XX-632-00-591000 | 142-XX-632-00-592000 | 142-XX-632-00-593000 | 142-XX-632-00-594000 |
| 40 | 2.0 | 0.6 | 0.7 | 10 | 142-XX-640-00-591000 | 142-XX-640-00-592000 | 142-XX-640-00-593000 | 142-XX-640-00-594000 |

*For Electrical, Mechanical & Enviromental Data, See pg. 4*

*XX=Plating Code See Below*

*For RoHS compliance select ◇ plating code.*

RoHS 2002/95/EC

| SPECIFY PLATING CODE XX= | 10◇ | | 90 | | 40◇ | | |
|---|---|---|---|---|---|---|---|
| Pin Plating | 10μ" Au | | 200μ" Sn/Pb | | 200μ" Sn | | |

# DUAL-IN-LINE HEADERS
## Surface Mount, Gull Wing
## Open Frame

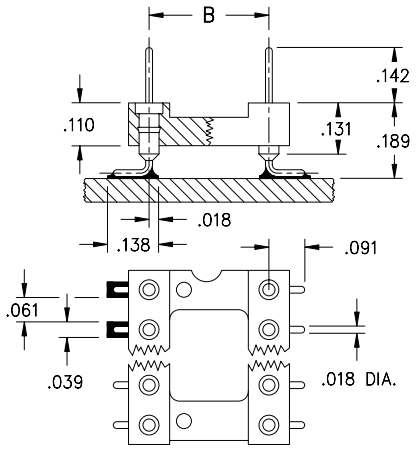


- Surface mount Gull Wing DIP sockets for devices featuring .100" lead spacing.
- Gull wing terminals for max. strength and easy in-circuit test.
- Series 150 use MM #3404 pins. See page 179 for details.
- Insulators are high temperature thermoplastic.

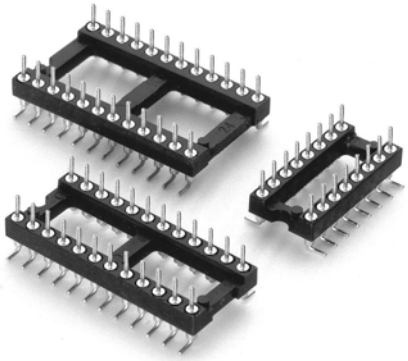

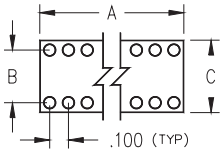


## Ordering Information

| Total number of pins | A | B | C | Quantity per tube | Ordering Information |
|---|---|---|---|---|---|
| 10 | 0.5 | 0.2 | 0.3 | 40 | 150-10-210-00-106000 |
| 4 | 0.2 | 0.3 | 0.4 | 102 | 150-10-304-00-106000 |
| 6 | 0.3 | 0.3 | 0.4 | 67 | 150-10-306-00-106000 |
| 8 | 0.4 | 0.3 | 0.4 | 50 | 150-10-308-00-106000 |
| 10 | 0.5 | 0.3 | 0.4 | 40 | 150-10-310-00-106000 |
| 14 | 0.7 | 0.3 | 0.4 | 29 | 150-10-314-00-106000 |
| 16 | 0.8 | 0.3 | 0.4 | 25 | 150-10-316-00-106000 |
| 18 | 0.9 | 0.3 | 0.4 | 22 | 150-10-318-00-106000 |
| 20 | 1.0 | 0.3 | 0.4 | 20 | 150-10-320-00-106000 |
| 22 | 1.1 | 0.3 | 0.4 | 18 | 150-10-322-00-106000 |
| 24 | 1.2 | 0.3 | 0.4 | 16 | 150-10-324-00-106000 |
| 28 | 1.4 | 0.3 | 0.4 | 14 | 150-10-328-00-106000 |
| 20 | 1.0 | 0.4 | 0.5 | 20 | 150-10-420-00-106000 |
| 22 | 1.1 | 0.4 | 0.5 | 18 | 150-10-422-00-106000 |
| 24 | 1.2 | 0.4 | 0.5 | 16 | 150-10-424-00-106000 |
| 28 | 1.4 | 0.4 | 0.5 | 14 | 150-10-428-00-106000 |
| 32 | 1.6 | 0.4 | 0.5 | 12 | 150-10-432-00-106000 |
| 24 | 1.2 | 0.6 | 0.7 | 16 | 150-10-624-00-106000 |
| 28 | 1.4 | 0.6 | 0.7 | 14 | 150-10-628-00-106000 |
| 32 | 1.6 | 0.6 | 0.7 | 12 | 150-10-632-00-106000 |
| 36 | 1.8 | 0.6 | 0.7 | 11 | 150-10-636-00-106000 |
| 40 | 2.0 | 0.6 | 0.7 | 10 | 150-10-640-00-106000 |
| 42 | 2.1 | 0.6 | 0.7 | 9 | 150-10-642-00-106000 |
| 48 | 2.4 | 0.6 | 0.7 | 8 | 150-10-648-00-106000 |
| 50 | 2.5 | 0.6 | 0.7 | 8 | 150-10-650-00-106000 |
| 52 | 2.6 | 0.6 | 0.7 | 7 | 150-10-652-00-106000 |
| 50 | 2.5 | 0.9 | 1.0 | 8 | 150-10-950-00-106000 |
| 52 | 2.6 | 0.9 | 1.0 | 7 | 150-10-952-00-106000 |
| 64 | 3.2 | 0.9 | 1.0 | 6 | 150-10-964-00-106000 |

For Electrical, Mechanical & Enviromental Data, See pg. 4

RoHS 2002/95/EC

For RoHS compliance select ◇ plating code.

Coplanarity .005". For Pin Counts >20 positions consult Technical Support.

| PLATING CODE = | 10◇ |
|---|---|
| Pin Plating | 10μ" Au |

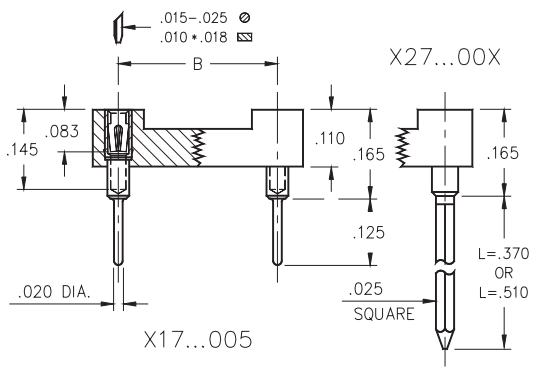


- High density DIP sockets and strips for devices featuring .070" lead spacing.
- Solder tails use MM #1802 receptacles, See page 140 for details. Wraposts use MM # 1702-2 or 1703-3 receptacles, See page 166 for details.
- Receptacles use Hi-Rel, 4-finger #30 contact and 6-finger #43 contact, both rated at 3 amps. See pages 218 & 220.
- Insulators are high temp. thermoplastic.


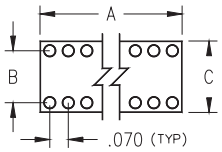


*For Electrical, Mechanical & Enviromental Data, See pg. 4*

## Ordering Information

*XX=Plating Code See Below*

| Total number of pins | A | B | C | Quantity per tube | Solder Tail | 2 Level Wrapost L = .370 | 3 Level Wrapost L = .510 |
|---|---|---|---|---|---|---|---|
| | | | | | **OPEN FRAME DIP SOCKET** | | |
| 16 | 0.572 | 0.3 | 0.39 | 35 | 117-XX-316-41-005000 | 127-XX-316-41-002000 | 127-XX-316-41-003000 |
| 28 | 0.992 | 0.4 | 0.49 | 20 | 117-XX-428-41-005000 | 127-XX-428-41-002000 | 127-XX-428-41-003000 |
| 30 | 1.062 | 0.4 | 0.49 | 18 | 117-XX-430-41-005000 | 127-XX-430-41-002000 | 127-XX-430-41-003000 |
| 48 | 1.692 | 0.4 | 0.49 | 12 | 117-XX-448-41-005000 | 127-XX-448-41-002000 | 127-XX-448-41-003000 |
| 20 | 0.712 | 0.6 | 0.69 | 28 | 117-XX-620-41-005000 | 127-XX-620-41-002000 | 127-XX-620-41-003000 |
| 28 | 0.992 | 0.6 | 0.69 | 20 | 117-XX-628-41-005000 | 127-XX-628-41-002000 | 127-XX-628-41-003000 |
| 40 | 1.412 | 0.6 | 0.69 | 14 | 117-XX-640-41-005000 | 127-XX-640-41-002000 | 127-XX-640-41-003000 |
| 42 | 1.482 | 0.6 | 0.69 | 13 | 117-XX-642-41-005000 | 127-XX-642-41-002000 | 127-XX-642-41-003000 |
| 48 | 1.692 | 0.6 | 0.69 | 11 | 117-XX-648-41-005000 | 127-XX-648-41-002000 | 127-XX-648-41-003000 |
| 52 | 1.832 | 0.6 | 0.69 | 11 | 117-XX-652-41-005000 | 127-XX-652-41-002000 | 127-XX-652-41-003000 |
| 56 | 1.972 | 0.6 | 0.69 | 10 | 117-XX-656-41-005000 | 127-XX-656-41-002000 | 127-XX-656-41-003000 |
| 64 | 2.252 | 0.6 | 0.69 | 8 | 117-XX-664-41-005000 | 127-XX-664-41-002000 | 127-XX-664-41-003000 |
| 68 | 2.392 | 0.6 | 0.69 | 8 | 117-XX-668-41-005000 | 127-XX-668-41-002000 | 127-XX-668-41-003000 |
| 64 | 2.252 | 0.75 | 0.84 | 8 | 117-XX-764-41-005000 | 127-XX-764-41-002000 | 127-XX-764-41-003000 |
| | | | | | **CLOSED FRAME DIP SOCKET** | | |
| 64 | 2.252 | 0.75 | 0.84 | 8 | 217-XX-764-41-005000 | 227-XX-764-41-002000 | 227-XX-764-41-003000 |
| | | | | | **SINGLE ROW STRIP SOCKET** If desired, we will supply any length up to 21 pins. | | |
| 21 | 1.482 | --- | .104 | - | 317-93-121-41-005000 | 327-XX-121-41-002000 | 327-XX-121-41-003000 |

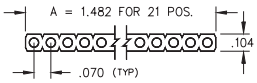


*For RoHS compliance select ◇ plating code.*

| SPECIFY PLATING CODE XX= | | | 93 | | | 43◇ | |
|---|---|---|---|---|---|---|---|
| Sleeve (Pin) | | | 200µ" Sn/Pb | | | 200µ"Sn | |
| Contact (Clip) | | | 30µ" Au | | | 30µ" Au | |

# DUAL-IN-LINE SOCKETS
## Gull Wing Shrink DIP Sockets & Strips
## Surface Mount Solder Tail

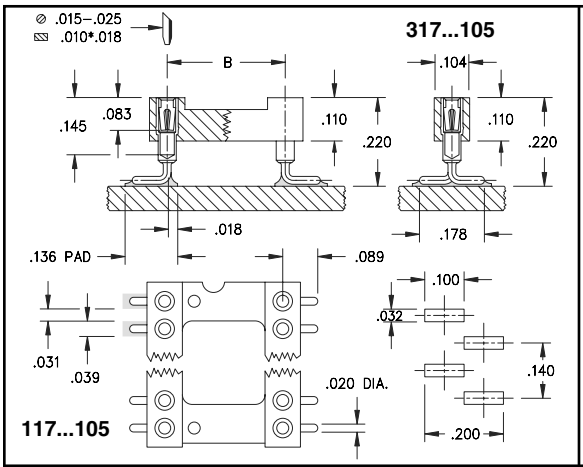


- Surface mount Gull Wing DIP sockets for devices featuring .070" lead spacing.
- Gull wing terminals for max. strength and easy in-circuit test.
- Hi-Rel, 4-finger BeCu #30 contact is rated at 3 amps. See page 218 for details.
- Series 117 and 317 use MM #1802 pins. See page 140 for details.
- Insulators are high temperature thermoplastic.

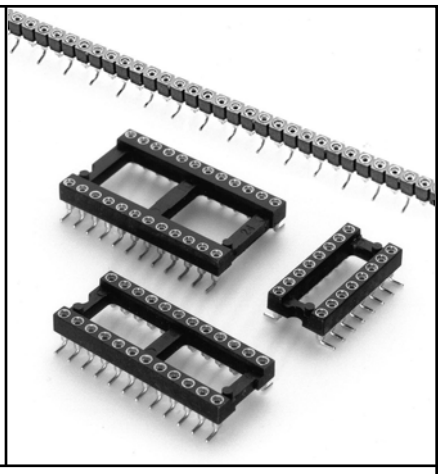

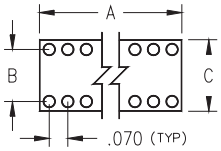


## Ordering Information

| Total number of pins | A | B | C | Quantity per tube | Ordering Information |
|---|---|---|---|---|---|
| 16 | 0.572 | 0.3 | 0.39 | 35 | 117-XX-316-41-105000 |
| 28 | 0.992 | 0.4 | 0.49 | 20 | 117-XX-428-41-105000 |
| 30 | 1.062 | 0.4 | 0.49 | 18 | 117-XX-430-41-105000 |
| 48 | 1.692 | 0.4 | 0.49 | 12 | 117-XX-448-41-105000 |
| 20 | 0.712 | 0.6 | 0.69 | 28 | 117-XX-620-41-105000 |
| 28 | 0.992 | 0.6 | 0.69 | 20 | 117-XX-628-41-105000 |
| 40 | 1.412 | 0.6 | 0.69 | 14 | 117-XX-640-41-105000 |
| 42 | 1.482 | 0.6 | 0.69 | 13 | 117-XX-642-41-105000 |
| 48 | 1.692 | 0.6 | 0.69 | 12 | 117-XX-648-41-105000 |
| 52 | 1.832 | 0.6 | 0.69 | 11 | 117-XX-652-41-105000 |
| 56 | 1.972 | 0.6 | 0.69 | 10 | 117-XX-656-41-105000 |
| 64 | 2.252 | 0.6 | 0.69 | 9 | 117-XX-664-41-105000 |
| 68 | 2.392 | 0.6 | 0.69 | 8 | 117-XX-668-41-105000 |
| 64 | 2.252 | 0.75 | 0.84 | 8 | 117-XX-764-41-105000 |

RoHS 2002/95/EC

*For RoHS compliance select ◇ plating code.*

*For Electrical, Mechanical & Enviromental Data, See pg. 4*

*XX=Plating Code See Below*

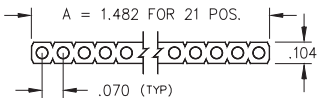


**SINGLE ROW STRIP HEADER**

If desired, we will supply any length up to 21 pins.

| | | | | | |
|---|---|---|---|---|---|
| 21 | 1.482 | - - - | .104 | - | 317-XX-121-41-105000 |

Coplanarity .005". For Pin Counts >10 positions consult Technical Support.

| SPECIFY PLATING CODE XX= | 13◇ | | 93 | | | 43◇ | |
|---|---|---|---|---|---|---|---|
| Sleeve (Pin) | 10μ" Au | | 200μ" Sn/Pb | | | 200μ"Sn | |
| Contact (Clip) | 30μ" Au | | 30μ" Au | | | 30μ" Au | |

# DUAL-IN-LINE HEADERS
## Shrink DIP Headers and Strips
## Solder Tail

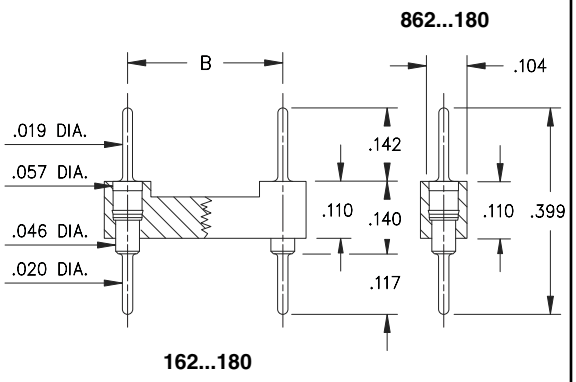


- High density DIP headers and strips for devices featuring .070" lead spacing.
- Series 162 DIP headers use MM #6218 pins. See page 175 for details.
- Series 862 strip headers use MM #6218 pins. See page 175 for details.
- Insulators are high temperature thermoplastic.

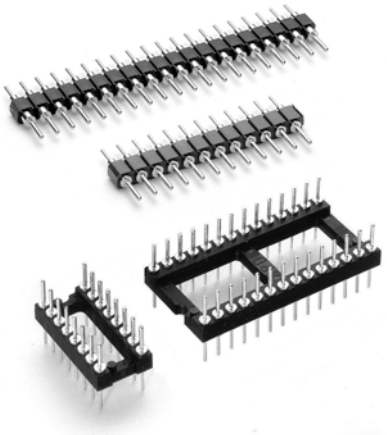

## Ordering Information

| Total number of pins | A | B | C | Quantity per tube | |
|---|---|---|---|---|---|
| 16 | 0.572 | 0.3 | 0.39 | 35 | 162-XX-316-00-180000 |
| 28 | 0.992 | 0.4 | 0.49 | 20 | 162-XX-428-00-180000 |
| 30 | 1.062 | 0.4 | 0.49 | 18 | 162-XX-430-00-180000 |
| 48 | 1.692 | 0.4 | 0.49 | 12 | 162-XX-448-00-180000 |
| 20 | 0.712 | 0.6 | 0.69 | 28 | 162-XX-620-00-180000 |
| 28 | 0.992 | 0.6 | 0.69 | 20 | 162-XX-628-00-180000 |
| 40 | 1.412 | 0.6 | 0.69 | 14 | 162-XX-640-00-180000 |
| 42 | 1.482 | 0.6 | 0.69 | 13 | 162-XX-642-00-180000 |
| 48 | 1.692 | 0.6 | 0.69 | 12 | 162-XX-648-00-180000 |
| 52 | 1.832 | 0.6 | 0.69 | 11 | 162-XX-652-00-180000 |
| 56 | 1.972 | 0.6 | 0.69 | 10 | 162-XX-656-00-180000 |
| 64 | 2.252 | 0.6 | 0.69 | 9 | 162-XX-664-00-180000 |
| 68 | 2.392 | 0.6 | 0.69 | 8 | 162-XX-668-00-180000 |
| 64 | 2.252 | 0.75 | 0.84 | 8 | 162-XX-764-00-180000 |

RoHS 2002/95/EC

*For RoHS compliance select ◇ plating code.*

*For Electrical, Mechanical & Enviromental Data, See pg. 4*

*XX=Plating Code See Below*

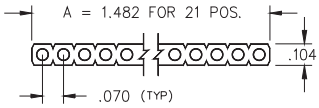


**SINGLE ROW STRIP HEADER**

If desired, we will supply any length up to 21 pins.

| | | | | | |
|---|---|---|---|---|---|
| 21 | 1.482 | - - - | .104 | - | 862-XX-121-00-180000 |

| SPECIFY PLATING CODE XX= | 10◇ | 90 | 40◇ |
|---|---|---|---|
| Pin Plating | 10µ" Au | 200µ" Sn/Pb | 200µ" Sn |

# DUAL-IN-LINE HEADERS
## Gull Wing Shrink DIP Headers and Strips
## Surface Mount Solder Tail

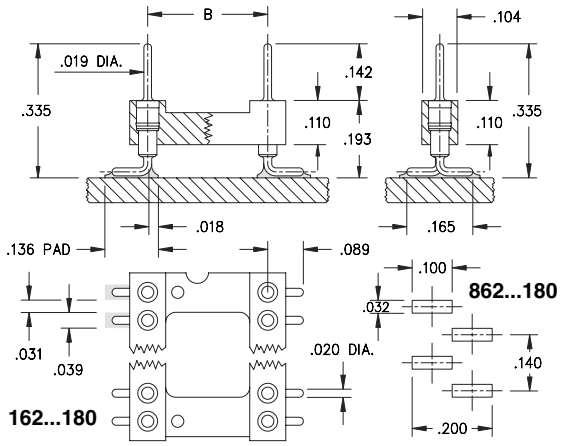


- Surface mount Gull Wing DIP sockets and strips for devices featuring .070" lead spacing.
- Gull wing terminals for max. strength and easy in-circuit test.
- Series 162 and Series 862 use MM #6218 pins. See page 175 for details.
- Insulators are high temperature thermoplastic.

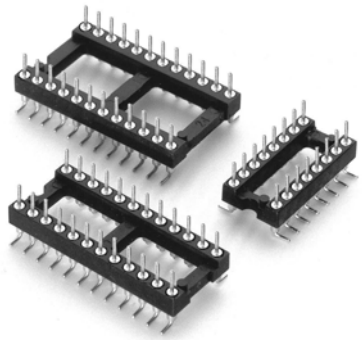

## Ordering Information

| Total number of pins | A | B | C | Quantity per tube | Ordering Information |
|---|---|---|---|---|---|
| 16 | 0.572 | 0.3 | 0.39 | 35 | 162-XX-316-30-180000 |
| 28 | 0.992 | 0.4 | 0.49 | 20 | 162-XX-428-30-180000 |
| 30 | 1.062 | 0.4 | 0.49 | 18 | 162-XX-430-30-180000 |
| 48 | 1.692 | 0.4 | 0.49 | 12 | 162-XX-448-30-180000 |
| 20 | 0.712 | 0.6 | 0.69 | 28 | 162-XX-620-30-180000 |
| 28 | 0.992 | 0.6 | 0.69 | 20 | 162-XX-628-30-180000 |
| 40 | 1.412 | 0.6 | 0.69 | 14 | 162-XX-640-30-180000 |
| 42 | 1.482 | 0.6 | 0.69 | 13 | 162-XX-642-30-180000 |
| 48 | 1.692 | 0.6 | 0.69 | 12 | 162-XX-648-30-180000 |
| 52 | 1.832 | 0.6 | 0.69 | 11 | 162-XX-652-30-180000 |
| 56 | 1.972 | 0.6 | 0.69 | 10 | 162-XX-656-30-180000 |
| 64 | 2.252 | 0.6 | 0.69 | 9 | 162-XX-664-30-180000 |
| 68 | 2.392 | 0.6 | 0.69 | 8 | 162-XX-668-30-180000 |
| 64 | 2.252 | 0.75 | 0.84 | 8 | 162-XX-764-30-180000 |

RoHS 2002/95/EC

*For RoHS compliance select ◇ plating code.*

*For Electrical, Mechanical & Enviromental Data, See pg. 4*

*XX=Plating Code See Below*

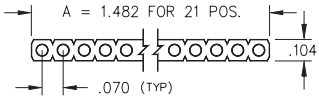


**SINGLE ROW STRIP SMT HEADER**

If desired, we will supply any length up to 21 pins.

| | | | | | |
|---|---|---|---|---|---|
| 21 | 1.482 | - - - | .104 | - | 862-XX-121-30-180000 |

Coplanarity .005". For Pin Counts >10 positions consult Technical Support.

| SPECIFY PLATING CODE XX= | 10◇ | 90 | 40◇ |
|---|---|---|---|
| Pin Plating | 10μ" Au | 200μ" Sn/Pb | 200μ" Sn |

# DUAL-IN-LINE SOCKETS
## Right Angle Mount
## Closed Frame

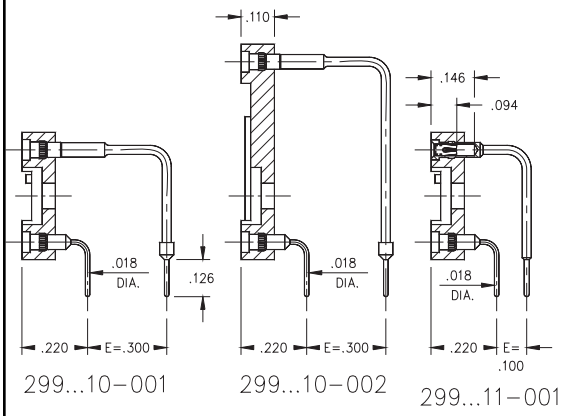


- For components to be mounted perpendicularly to the PCB, such as LED displays.
- Horizontal mount solder tails are available with either .300" (standard) or .100" row spacing.
- Series 299 use MM #1103/0903, #1103/1610 or #1103/0904 pins. See pages 137 & 138 for details.
- Hi-Rel, 4-finger BeCu #30 contact is rated at 3 amps. See page 218 for details.
- Insulators are high temperature thermoplastic.

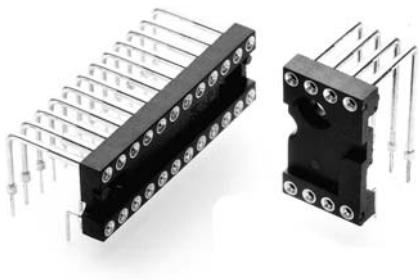

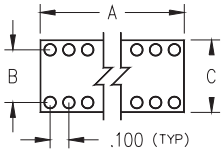


## Ordering Information

| Total number of pins | A | B | C | Quantity per tube | E=.300 | E=.100 |
|---|---|---|---|---|---|---|
| 6 | 0.3 | 0.3 | 0.4 | | 299-XX-306-10-001000 | 299-XX-306-11-001000 |
| 8 | 0.4 | 0.3 | 0.4 | | 299-XX-308-10-001000 | 299-XX-308-11-001000 |
| 10 | 0.5 | 0.3 | 0.4 | | 299-XX-310-10-001000 | 299-XX-310-11-001000 |
| 12 | 0.6 | 0.3 | 0.4 | 33 | 299-XX-312-10-001000 | 299-XX-312-11-001000 |
| 14 | 0.7 | 0.3 | 0.4 | 29 | 299-XX-314-10-001000 | 299-XX-314-11-001000 |
| 16 | 0.8 | 0.3 | 0.4 | 25 | 299-XX-316-10-001000 | 299-XX-316-11-001000 |
| 18 | 0.9 | 0.3 | 0.4 | 22 | 299-XX-318-10-001000 | 299-XX-318-11-001000 |
| 20 | 1.0 | 0.3 | 0.4 | 20 | 299-XX-320-10-001000 | 299-XX-320-11-001000 |
| 24 | 1.2 | 0.3 | 0.4 | 16 | 299-XX-324-10-001000 | 299-XX-324-11-001000 |
| 8 | 0.4 | 0.6 | 0.7 | 50 | 299-XX-608-10-002000 | |
| 10 | 0.5 | 0.6 | 0.7 | 40 | 299-XX-610-10-002000 | |
| 12 | 0.6 | 0.6 | 0.7 | 34 | 299-XX-612-10-002000 | |
| 14 | 0.7 | 0.6 | 0.7 | 28 | 299-XX-614-10-002000 | |
| 16 | 0.8 | 0.6 | 0.7 | 25 | 299-XX-616-10-002000 | |
| 18 | 0.9 | 0.6 | 0.7 | 22 | 299-XX-618-10-002000 | |
| 20 | 1.0 | 0.6 | 0.7 | 20 | 299-XX-620-10-002000 | |
| 22 | 1.1 | 0.6 | 0.7 | 18 | 299-XX-622-10-002000 | |
| 24 | 1.2 | 0.6 | 0.7 | 16 | 299-XX-624-10-002000 | |
| 26 | 1.3 | 0.6 | 0.7 | 15 | 299-XX-626-10-002000 | |
| 28 | 1.4 | 0.6 | 0.7 | 14 | 299-XX-628-10-002000 | |
| 30 | 1.5 | 0.6 | 0.7 | 13 | 299-XX-630-10-002000 | |
| 32 | 1.6 | 0.6 | 0.7 | 12 | 299-XX-632-10-002000 | |
| 36 | 1.8 | 0.6 | 0.7 | 11 | 299-XX-636-10-002000 | |
| 40 | 2.0 | 0.6 | 0.7 | 10 | 299-XX-640-10-002000 | |

*For Electrical, Mechanical & Enviromental Data, See pg. 4*

*XX=Plating Code See Below*

*For RoHS compliance select ◇ plating code.*

RoHS 2002/95/EC

| SPECIFY PLATING CODE XX= | | | 93 | | | 43◇ | |
|---|---|---|---|---|---|---|---|
| Sleeve (Pin) | | | 200µ" Sn/Pb | | | 200µ" Sn | |
| Contact (Clip) | | | 30µ" Au | | | 30µ" Au | |

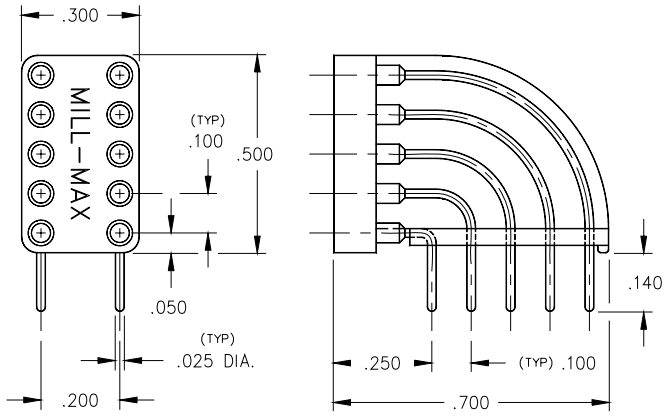


**Fig. 1**

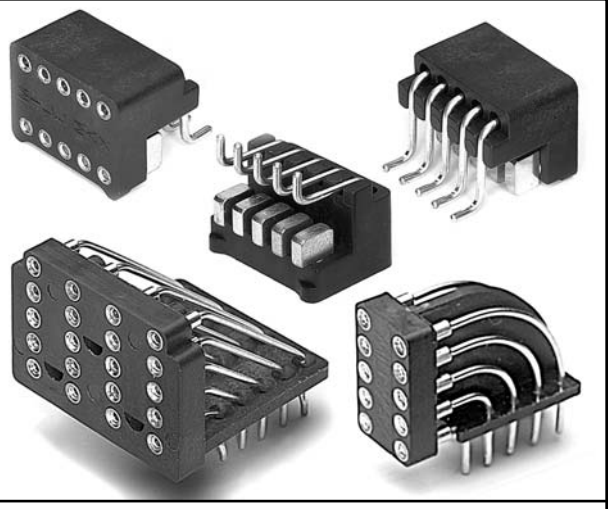

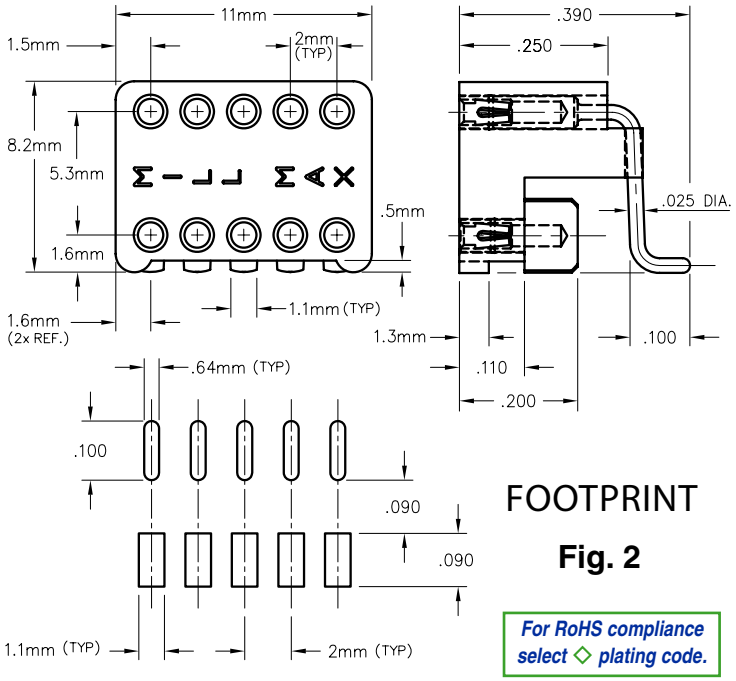


FOOTPRINT

**Fig. 2**

*For RoHS compliance select ◇ plating code.*

- Series 296, 299 & 594 vertical display sockets are used to mount dot matrix and 7-segment LED displays at the edge of and perpendicular to a printed circuit board. This positions the display directly behind the translucent front panel of the equipment.
- Series 299 & 594 are through hole mount and can be wave or intrusive reflow soldered.
- Series 296 is surface mount and can be supplied on carrier tape for automated "pick 'n place" assembly.
- Insulators are high temp. Nylon 46, suitable for all soldering processes including "lead-free".

| Fig. | No. of pins | Ordering Information |
|---|---|---|
| 1 | 10 | **299-99-210-12-001800**<br>Plating Code<br>RoHS 2002/95/EC |
| 2 | 10 | **296-XX-010-30-691800**<br>(Discrete sockets)<br>**296-XX-010-30-692800**<br>(Supplied on 24mm wide carrier tape per EIA-481: 450 per 13" reel) |
| 3 | 20 | **594-XX-020-01-007032**<br>Plating Code<br>RoHS 2002/95/EC |

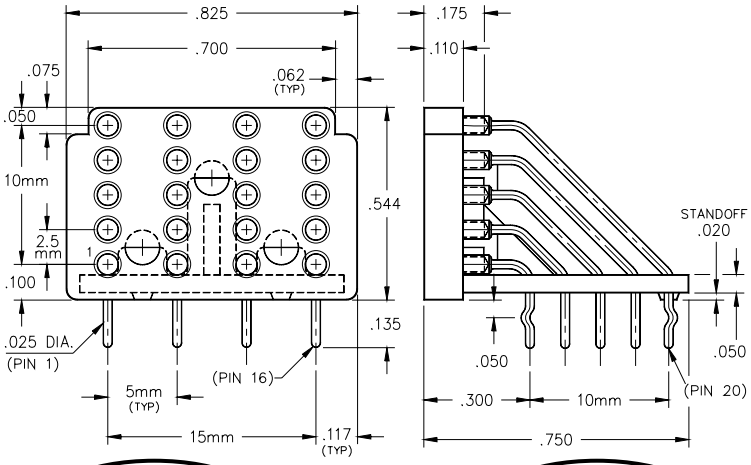


*For Electrical, Mechanical & Enviromental Data, See pg. 4*

**Fig. 3**

*XX=Plating Code See Below*

| SPECIFY PLATING CODE XX= | 99 | 44◇ |
|---|---|---|
| Sleeve (Pin) | 200μ" Sn/Pb | 200μ" Sn |
| Contact (Clip) | 200μ" Sn/Pb | 200μ" Sn |

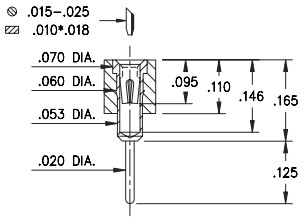


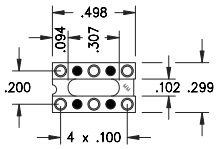


Fig. 1

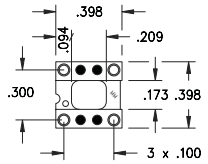


Fig. 2

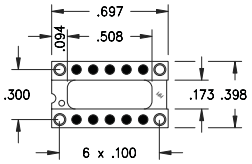


Fig. 3

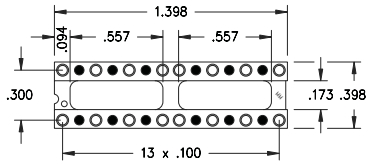


Fig. 4

○ = Loaded Position ● = Empty Position

- Relay sockets accept devices with I/O pins on .100" grid.
- Additional Relay DIP socket patterns are available on Page 64.
- Zig-Zag strip sockets are suitable for IC's and memory chips with staggered double row patterns.
- Series 110 and 410 use MM #1001 receptacles. See page 136 for details.
- Receptacles use Hi-Rel, 4 finger #30 BeCu contact rated at 3 amps. See page 218 for details.
- Insulators are high temp. thermoplastic.

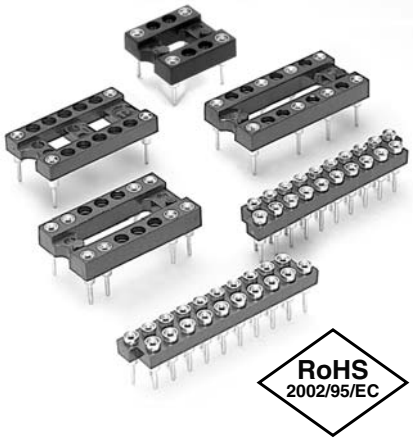


## Selectively Loaded Sockets For Dual-In-Line Relays

| | No. of pins | Ordering Information |
|---|---|---|
| Fig. 1 | 6 | 110-XX-210-10-001000 |
| Fig. 2 | 4 | 110-XX-308-10-001000 |
| Fig. 3 | 4 | 110-XX-314-10-001000 |
| Fig. 4 | 16 | 110-XX-328-10-001000 |

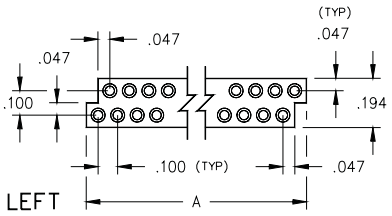


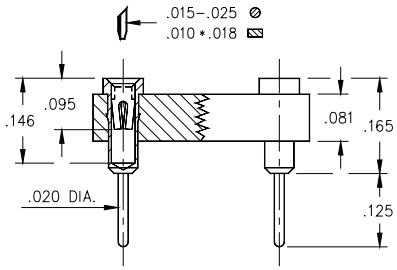


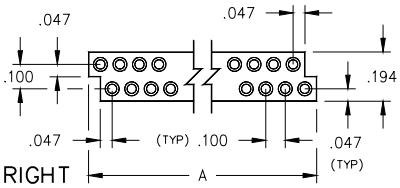


## Staggered (Zig-Zag) Strip Sockets

| Dim 'A' | No. of pins | Insulator Body | Ordering Information |
|---|---|---|---|
| 0.747 | 14 | Left, Stackable | 410-93-214-10-001000 |
| 0.747 | 14 | Right, Stackable | 410-93-214-10-002000 |
| 0.847 | 16 | Left, Stackable | 410-93-216-10-001000 |
| 0.847 | 16 | Right, Stackable | 410-93-216-10-002000 |
| 1.047 | 20 | Left, Stackable | 410-93-220-10-001000 |
| 1.047 | 20 | Right, Stackable | 410-93-220-10-002000 |
| 1.247 | 24 | Left, Stackable | 410-93-224-10-001000 |
| 1.247 | 24 | Right, Stackable | 410-93-224-10-002000 |
| 1.447 | 28 | Left, Stackable | 410-93-228-10-001000 |
| 1.447 | 28 | Right, Stackable | 410-93-228-10-002000 |

*For Electrical, Mechanical & Enviromental Data, See pg. 4*

*XX=Plating Code See Below*

*For RoHS compliance select ◇ plating code.*

| SPECIFY PLATING CODE XX= | 13◇ | | 93 | | | 43◇ | |
|---|---|---|---|---|---|---|---|
| Sleeve (Pin) | 10µ" Au | | 200µ" Sn/Pb | | | 200µ"Sn | |
| Contact (Clip) | 30µ" Au | | 30µ" Au | | | 30µ" Au | |

# DUAL-IN-LINE SOCKETS
## Selectively Loaded Relay DIP Sockets
## Solder Tail

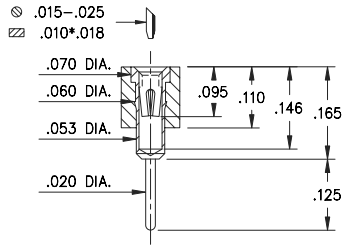


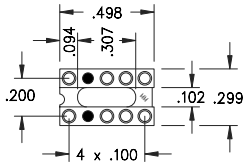


Fig. 1

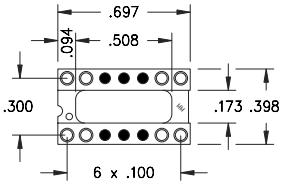


Fig. 2

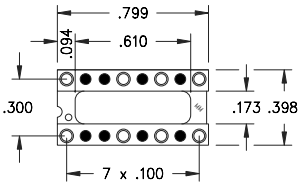


Fig. 3

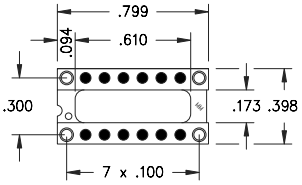


Fig. 4

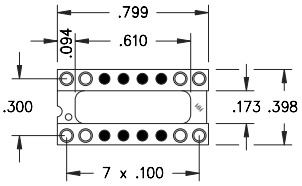


Fig. 5

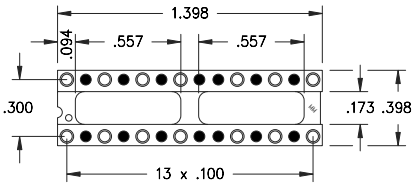


Fig. 6

○ = Loaded Position ● = Empty Position

- Relay sockets accept devices with I/O pins on .100" grid.
- Additional Relay DIP socket patterns are available on Page 63.
- Series 110 use MM #1001 receptacles. See page 136 for details.
- Receptacles use Hi-Rel, 4 finger #30 BeCu contact rated at 3 amps. See page 218 for details.
- Insulators are high temp. thermoplastic.

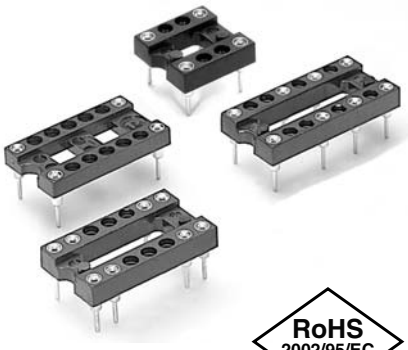

RoHS 2002/95/EC

## Ordering Information

| | | |
|---|---|---|
| Fig. 1 | Series 110...002 | 8 Position Relay Socket |
| | 110-XX-210-10-002000 | |
| Fig. 2 | Series 110...002 | 8 Position Relay Socket |
| | 110-XX-314-10-002000 | |
| Fig. 3 | Series 110...003 | 8 Position Relay Socket |
| | 110-XX-316-10-003000 | |
| Fig. 4 | Series 110...004 | 4 Position Relay Socket |
| | 110-XX-316-10-004000 | |
| Fig. 5 | Series 110...005 | 8 Position Relay Socket |
| | 110-XX-316-10-005000 | |
| Fig. 6 | Series 110...002 | 14 Position Relay Socket |
| | 110-XX-328-10-002000 | |

*For Electrical, Mechanical & Enviromental Data, See pg. 4*

*XX=Plating Code See Below*

*For RoHS compliance select ◇ plating code.*

| SPECIFY PLATING CODE XX= | 13◇ | | 93 | | | 43◇ | |
|---|---|---|---|---|---|---|---|
| Sleeve (Pin) | 10µ" Au | | 200µ" Sn/Pb | | | 200µ"Sn | |
| Contact (Clip) | 30µ" Au | | 30µ" Au | | | 30µ" Au | |

# SIP SOCKETS, HEADERS AND CARRIERS
# QUICK SELECTOR CHART

**USE THIS CONVENIENT CHART TO SELECT THE RIGHT SIP INTERCONNECT FOR YOUR APPLICATION**

1) Determine the style of pin needed to meet your requirement.
2) Select the appropriate insulator frame, pitch and grid spacing.
3) Turn to indicated page for detail and ordering information.
4) For custom assembly in a selected insulator, contact our applications engineers.

## SINGLE & DOUBLE ROW SIP SOCKETS, HEADERS AND CARRIERS

| Select Pin | .015" - .025" Diameter Pins | | | | | | | | .025" - .037" & .025" Sq. Diameter Pins | | | | | | | | | .037-.043" Dia. Pins | Slotted, Turret, Solder Cup | | Socket Carriers | | |
|---|---|---|---|---|---|---|---|---|---|---|---|---|---|---|---|---|---|---|---|---|---|---|---|
| | *Vertical Socket* | *Right Angle Socket* | *Vertical Pin* | *Right Angle Pin* | *Surface Mount Pin* | *Surface Mount Socket* | *1-4 Level Wrapost Socket* | *Pluggable Wrapost Socket* | *.020/.030 Elevated Solder Tail Pin* | *Surface Mount Socket & Headers* | *Solderless Press-fit Socket* | *Solderless Press-fit Pin* | *Vertical Socket* | *OFP Pass Through Socket* | *Right Angle Socket* | *Vertical Pin* | *Right Angle Pin* | *Vertical Socket* | *Solder Tail* | *Wrapost Tail* | *Solder Tail* | *Low Profile* | *Ultra Low Profile* |
| .050"Grid Single Row | 66 | 67 | 66 | 67 | 68<br>69 | 68<br>69 | | | | | | | | | | | | | | | | | |
| .050"Grid Double Row | 66 | 67 | 66 | 67 | 68 | 68 | | | | | | | | | | | | | | | | | |
| 2mm Grid Single Row | 70 | 72 | 70 | 72 | 71 | 71 | | | | | | | | | | | | | | | | | |
| 2mm Grid Double Row | 70 | 72 | 70 | 72 | 71 | 71 | | | | | | | | | | | | | | | | | |
| .200" Grid Single Row | | | | | | | | | | | | | 88 | | 88 | | 88 | | | | | | |
| .100" Grid Single Row | 73<br>79<br>89<br>91<br>97 | 73 | 73<br>79<br>102<br>103<br>106 | 73 | 76<br>77<br>78 | 69<br>76<br>77<br>78 | 93 | 95 | 105 | 77<br>85 | 83 | 83 | 80<br>81 | 87 | 81 | 80<br>81 | 81 | 86 | 75<br>108 | 110 | 99 | 100 | 101 |
| .100" Grid Double Row | 74<br>79<br>90<br>92<br>98 | 74 | 74<br>79<br>102<br>104<br>107 | 74 | 76<br>78 | 76<br>78 | 94 | 96 | | 85 | 84 | 84 | 80<br>82 | 87 | 82 | 80<br>82 | 82 | 86 | 75<br>109 | 111 | 99 | 100 | 101 |

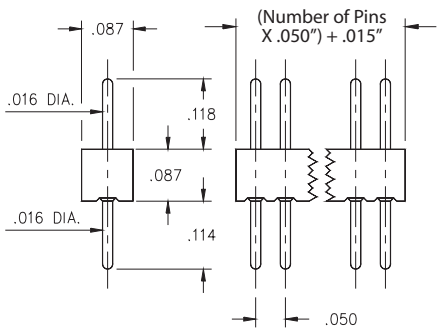


Fig. 1

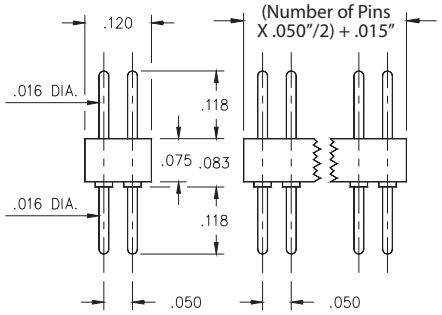


Fig. 2

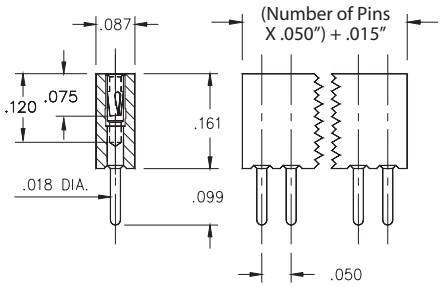


Fig. 3

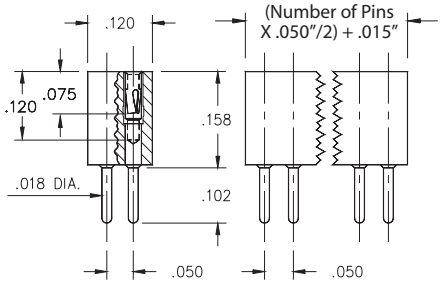


Fig. 4

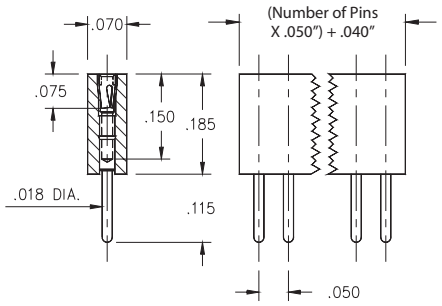


Fig. 5

- Series 850 single and double row interconnects have .050" pin spacing & permit board stacking as low as .248".
- Pin headers have .016" dia. pins ( MM #4006-0 ). See page 175 for details.
- MM #0467 and MM #4890 receptacles use Hi-Rel, 3-finger BeCu #11 contacts rated at 3 amps. ( #11 contact accepts pin diameters from .015"-.020" ). See pages 129 and 131 for details.
- Insulators are high temp. thermoplastic, suitable for all soldering operations.

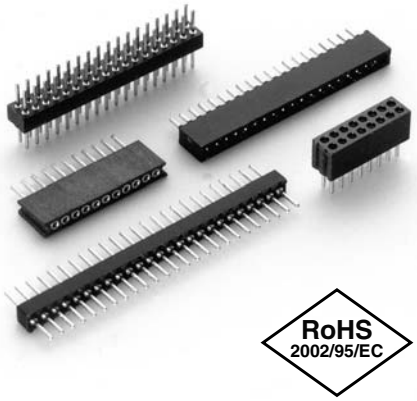


## Ordering Information

| | | |
|---|---|---|
| **Fig. 1** | **Single Row** | **.087" Profile Pin Header** |
| | 850-XX-0_ _-10-001000 | |
| | **Specify # of pins** → | 01-50 |
| **Fig. 2** | **Double Row** | **.075" Profile Pin Header** |
| | 852-XX-_ _ _-10-001000 | |
| | **Specify # of pins** → | 002-100 |

*For Electrical, Mechanical & Enviromental Data, See pg. 4*

*XX=Plating Code See Below*

*For RoHS compliance select ◇ plating code.*

| SPECIFY PLATING CODE XX= | 10◇ | 90 | 40◇ |
|---|---|---|---|
| Pin Plating | 10µ" Au | 200µ" Sn/Pb | 200µ" Sn |

| | | |
|---|---|---|
| **Fig. 3** | **Single Row** | **.161" Profile Socket** |
| | 851-XX-0_ _-10-001000 | |
| | **Specify # of pins** → | 01-50 |
| **Fig. 4** | **Double Row** | **.161" Profile Socket** |
| | 853-XX-_ _ _-10-001000 | |
| | **Specify # of pins** → | 002-100 |
| **Fig. 5** | **Single Row** | **.185" Profile Socket** |
| | 851-XX-0_ _-10-002000 | |
| | **Specify # of pins** → | 01-77 |

*For Electrical, Mechanical & Enviromental Data, See pg. 4*

*XX=Plating Code See Below*

*For RoHS compliance select ◇ plating code.*

| SPECIFY PLATING CODE XX= | | | 93 | 99 | | 43◇ | |
|---|---|---|---|---|---|---|---|
| Sleeve (Pin) | | | 200µ" Sn/Pb | 200µ"Sn/Pb | | 200µ"Sn | |
| Contact (Clip) | | | 30µ" Au | 200µ"Sn/Pb | | 30µ" Au | |

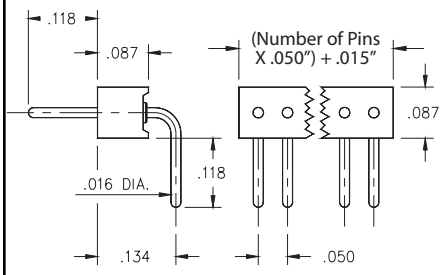


Fig. 1

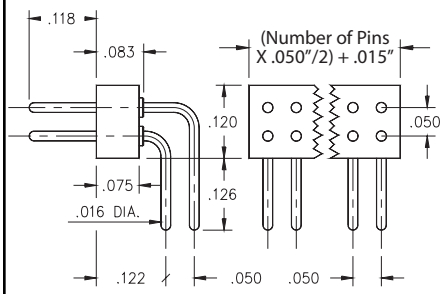


Fig. 2

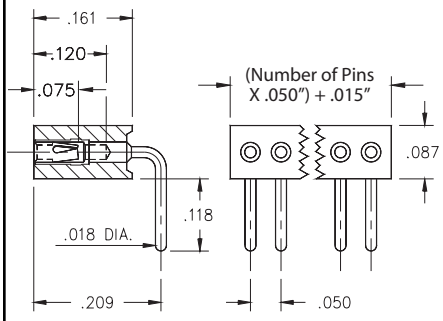


Fig. 3

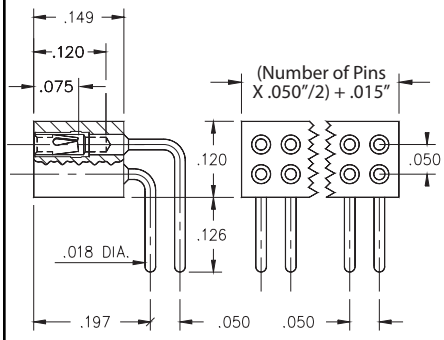


Fig. 4

- Series 850 and 851 interconnects are available in single and double row form.
- 850 & 852 series headers use MM #4006-1 and #4006-2 pins. See page 175 details.
- 851 & 853 series sockets use MM #4890-1 and #4890-2 receptacles, that accept pin diameters from .015"-.021" See page 131 for details.
- Insulators are high temp. thermoplastic.


## Ordering Information

**Fig. 1** — **Single Row** — **Right Angle Pin Header**

850-XX-0_ _-20-001000

**Specify # of pins** → 01-50

**Fig. 2** — **Double Row** — **Right Angle Pin Header**

852-XX-_ _ _-20-001000

**Specify # of pins** → 002-100

*For Electrical, Mechanical & Enviromental Data, See pg. 4*

*XX=Plating Code See Below*

*For RoHS compliance select ◇ plating code.*

| SPECIFY PLATING CODE XX= | 10◇ | 90 | 40◇ |
|---|---|---|---|
| Pin Plating | 10µ" Au | 200µ" Sn/Pb | 200µ" Sn |

**Fig. 3** — **Single Row** — **Right Angle Socket**

851-XX-0_ _-20-001000

**Specify # of pins** → 01-50

**Fig. 4** — **Double Row** — **Right Angle Socket**

853-XX-_ _ _-20-001000

**Specify # of pins** → 002-100

*For Electrical, Mechanical & Enviromental Data, See pg. 4*

*XX=Plating Code See Below*

*For RoHS compliance select ◇ plating code.*

| SPECIFY PLATING CODE XX= | | | 93 | 99 | | 43◇ | |
|---|---|---|---|---|---|---|---|
| Sleeve (Pin) | | | 200µ" Sn/Pb | 200µ"Sn/Pb | | 200µ"Sn | |
| Contact (Clip) | | | 30µ" Au | 200µ"Sn/Pb | | 30µ" Au | |

*For RoHS compliance select ◇ plating code.*

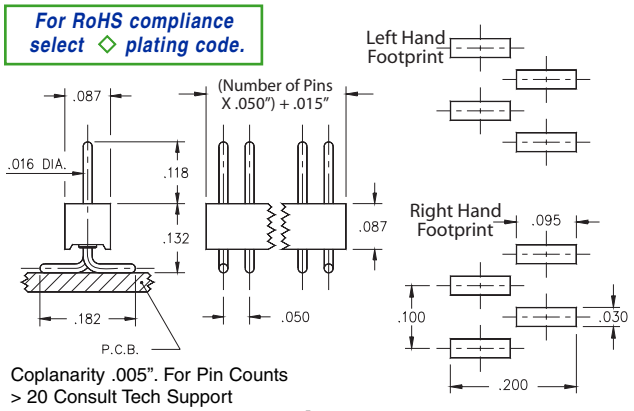


Coplanarity .005". For Pin Counts > 20 Consult Tech Support

**Fig. 1**

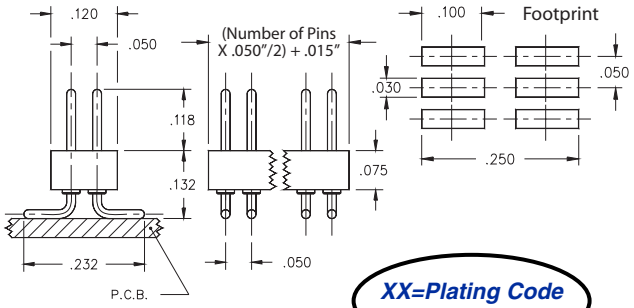


*XX=Plating Code See Below*

Coplanarity .005". For Pin Counts > 40 Consult Tech Support

**Fig. 2**

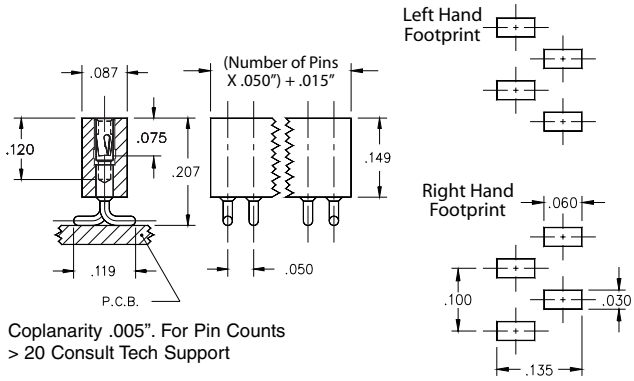


Coplanarity .005". For Pin Counts > 20 Consult Tech Support

**Fig. 3**

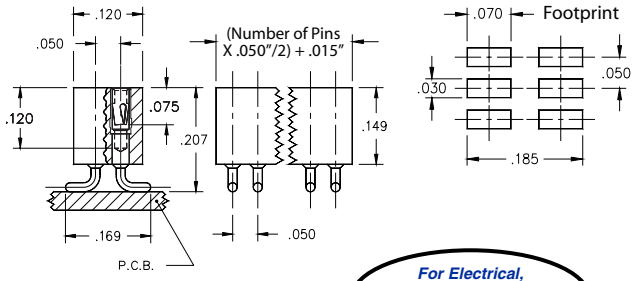


*For Electrical, Mechanical & Enviromental Data, See pg. 4*

Coplanarity .005". For Pin Counts > 40 Consult Tech Support

**Fig. 4**

- Single row interconnects having an even number of pins are now available with a left or right hand footprint.
- Headers (850 & 852) use MM# 4006 pins. See page 175 for details.
- Sockets (851 & 853) use MM# 4890-0 receptacles and accept pin diameters from .015-.021. See page 131 for details.
- Coplanarity .005" (Single Row max 20 pins; Double Row max 40 pins). For higher pin counts contact techical support .
- Insulators are high temp. thermoplastic.

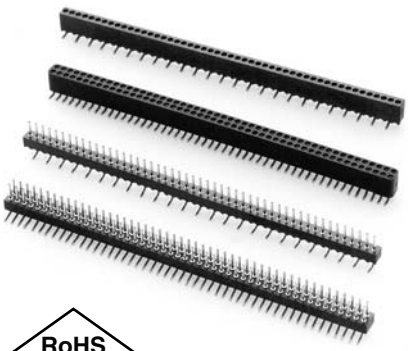


## Ordering Information

| | | | | | |
|---|---|---|---|---|---|
| **Fig. 1L** | **Single Row Header, Left Hand Footprint Odd or Even # of pins** | | | | |
| | 850-XX-0_ _-30-001000 | | | | |
| | **Specify # of pins** → 01-50 | | | | |
| **Fig. 1R** | **Single Row Header, Right Hand Footprint Even # of pins** | | | | |
| | 850-XX-0_ _-30-002000 | | | | |
| | **Specify even # of pins** → 02-50 | | | | |
| **Fig. 2** | **Double Row Header, Even # of pins** | | | | |
| | 852-XX-_ _ _-30-001000 | | | | |
| | **Specify even # of pins** → 004-100 | | | | |
| SPECIFY PLATING CODE XX= | | 10◇ | 90 | 40◇ | |
| Pin Plating | | 10µ" Au | 200µ" Sn/Pb | 200µ" Sn | |
| **Fig. 3L** | **Single Row Socket, Left Hand Footprint Odd or Even # of pins** | | | | |
| | ★ 44 Plating Non-Standard 851-XX-0_ _-30-001000 | | | | |
| | **Specify # of pins** → 01-50 | | | | |
| **Fig. 3R** | **Single Row Socket, Right Hand Footprint Even # of pins** | | | | |
| | 851-XX-0_ _-30-002000 | | | | |
| | **Specify even # of pins** → 02-50 | | | | |
| **Fig. 4** | **Double Row Socket, Even # of pins** | | | | |
| | ★ 44 Plating Non-Standard 853-XX-_ _ _-30-001000 | | | | |
| | **Specify even # of pins** → 004-100 | | | | |
| SPECIFY PLATING CODE XX= | | 93 | 99 | 43◇ | 44◇ |
| Sleeve (Pin) | | 200µ" Sn/Pb | 200µ"Sn/Pb | 200µ"Sn | 200µ"Sn |
| Contact (Clip) | | 30µ" Au | 200µ"Sn/Pb | 30µ" Au | 200µ"Sn |

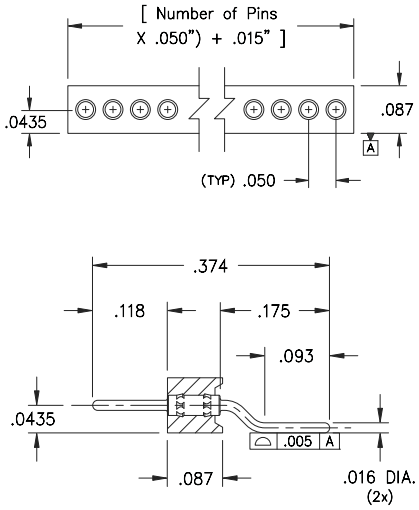


Coplanarity .005". For Pin Counts >20 positions consult Technical Support.

**Fig. 1**

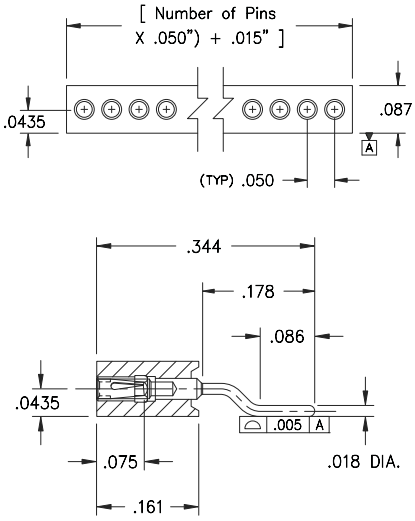


Coplanarity .005". For Pin Counts >20 positions consult Technical Support.

**Fig. 2**

- Series 850 horizontal Surface Mount Z-Bend headers are availble with .016" dia. solder tails and pluggable pins (MM #4006-1). See page 175 for details.
- Series 851 horizontal Surface Mount Z-Bend sockets use MM #4890-1 receptacles that accept pin diameters from .015"-.020". See pages 131 for details.
- Insulators are high temp. thermoplastic.

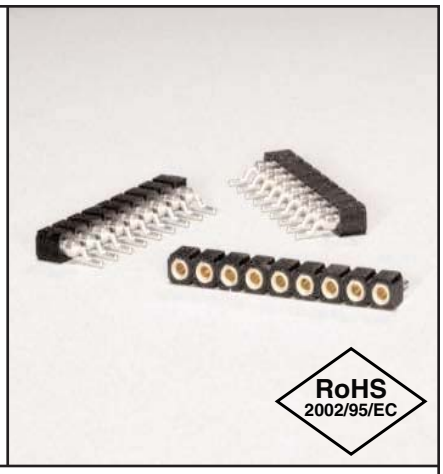


## Ordering Information

**Fig. 1** — **Single Row Surface Mount Z-Bend Header**

850-10-0_ _-40-001000

**Specify # of pins** → 02-20

*For Electrical, Mechanical & Enviromental Data, See pg. 4*

*XX=Plating Code See Below*

*For RoHS compliance select ◇ plating code.*

| SPECIFY PLATING CODE XX= | 10◇ | | | |
|---|---|---|---|---|
| Pin Plating | 10µ" Au | | | |

**Fig. 2** — **Single Row Surface Mount Z-Bend Socket**

851-13-0_ _-40-001000

**Specify # of pins** → 02-20

*For Electrical, Mechanical & Enviromental Data, See pg. 4*

*XX=Plating Code See Below*

*For RoHS compliance select ◇ plating code.*

| SPECIFY PLATING CODE XX= | 13 | | | | | | |
|---|---|---|---|---|---|---|---|
| Sleeve (Pin) | 10µ"Au | | | | | | |
| Contact (Clip) | 30µ" Au | | | | | | |

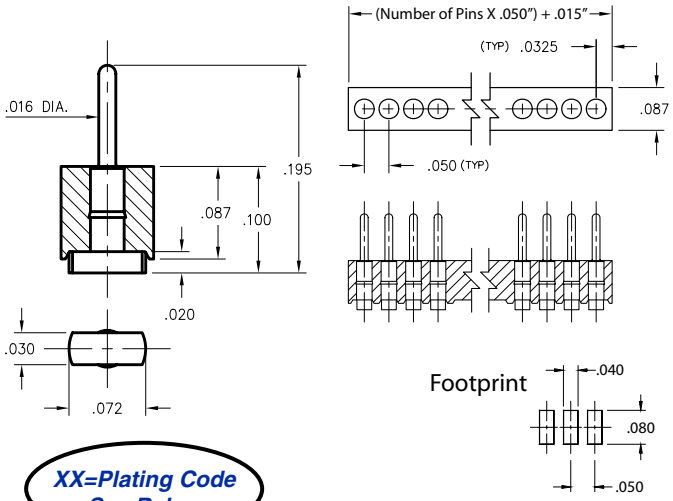


XX=Plating Code See Below

Fig. 1

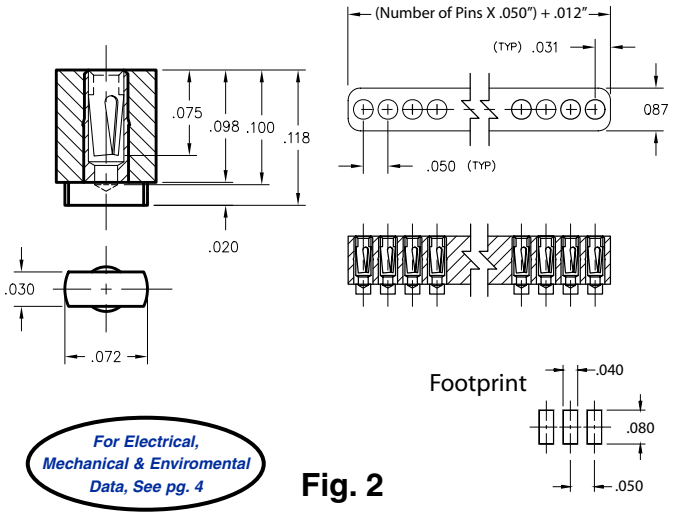


For Electrical, Mechanical & Enviromental Data, See pg. 4

Fig. 2

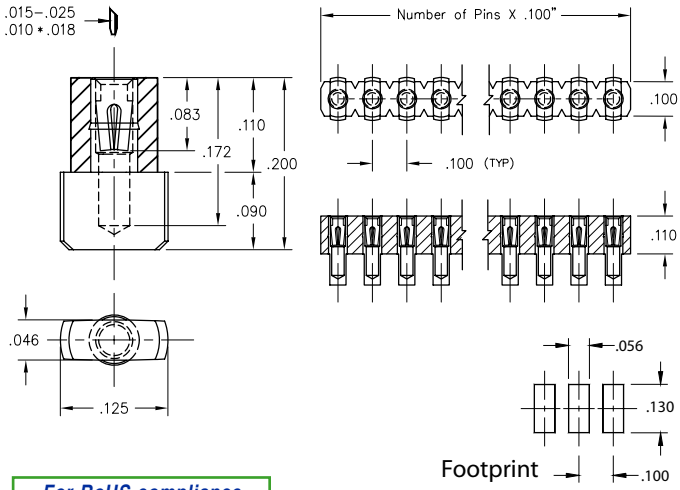


For RoHS compliance select ◇ plating code.

Fig. 3

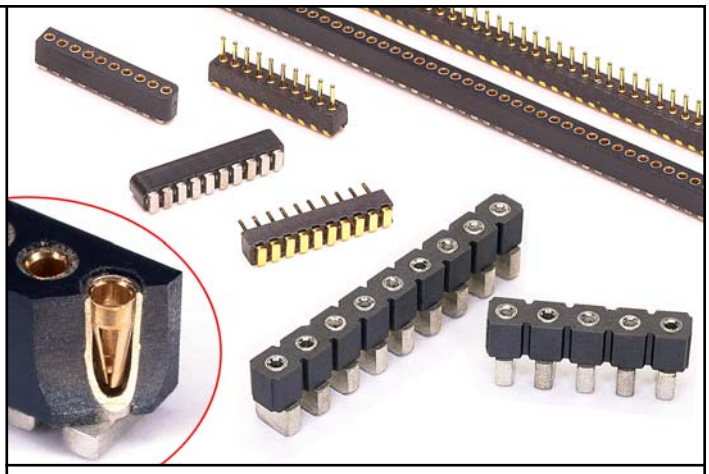

- Series 340 and 399 interconnects are single row headers and sockets having unique surface mount "block" terminals.
- "Block" termination makes the interconnects "self-standing". This also minimizes profile and reduces the footprint compared with traditional "gull wing" designs.
- Series 399 is a matched pair of .050" pitch sockets and headers with a mated height of only .218".
- Series 340 is a .100" pitch SIP socket using Mill-Max #30 contact (Data on page 218). The profile is only .200".
- Insulators are high temp. thermoplastic, suitable for all soldering processes.

RoHS 2002/95/EC

## Ordering Information

| | | | |
|---|---|---|---|
| Fig. 1 | **Single Row Header, .050" Grid** | | |
| | 399-10-0XX-00-310000<br>**Plating Code** **Specify # of pins** 02-50 | | |
| | PLATING CODE | 10◇ | |
| | Pin Plating | 10μ" Au | |
| Fig. 2 | **Single Row Socket, .050" Grid** | | |
| | 399-XX-0XX-21-300000<br>**Plating Code** **Specify # of pins** 02-50 | | |
| | SPECIFY PLATING CODE XX= | 91 | 41◇ |
| | Sleeve (Pin) | 200μ" Sn/Pb | 200μ"Sn |
| | Contact (Clip) | 10μ" Au | 10μ" Au |
| Fig. 3 | **Single Row Socket, .100" Grid** | | |
| | 340-XX-1XX-30-780100<br>**Plating Code** **Specify # of pins** 02-64 | | |
| | SPECIFY PLATING CODE XX= | 99 | 44◇ |
| | Sleeve (Pin) | 200μ" Sn/Pb | 200μ"Sn |
| | Contact (Clip) | 200μ" Sn/Pb | 200μ"Sn |

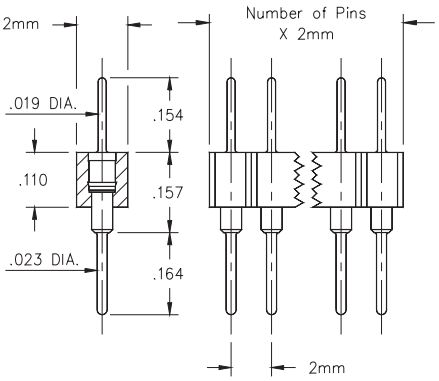


Fig. 1

- Series 830 single and double row interconnects have 2mm pin spacing and permit board stacking as low as .322".
- Pin headers (830 & 832 series) use MM #5012 pins. See page 175 for details.
- Sockets (831 & 833 series) use MM #1802 receptacles and accept pin diameters from .015"-.025". See page 140 for details.
- Insulators are high temp. thermoplastic, suitable for all soldering operations.


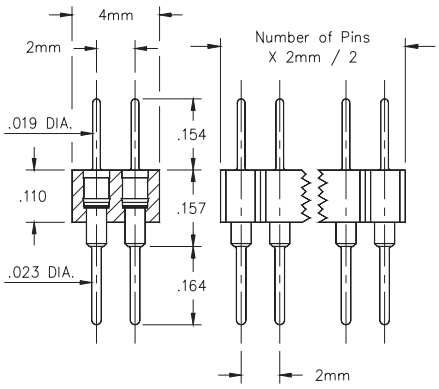


Fig. 2

## Ordering Information

### Fig. 1 — Single Row Pin Header

830-XX-0_ _-10-001000

**Specify # of pins** → 01-50

### Fig. 2 — Double Row Pin Header

832-XX-_ _ _-10-001000

**Specify # of pins** → 002-100

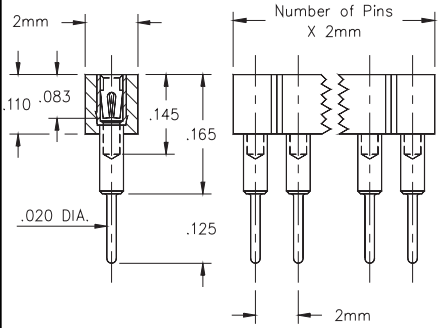


Fig. 3

*For Electrical, Mechanical & Enviromental Data, See pg. 4*

*XX=Plating Code See Below*

*For RoHS compliance select ◇ plating code.*

| SPECIFY PLATING CODE XX= | 10◇ | 90 | 40◇ | |
|---|---|---|---|---|
| Pin Plating | 10µ" Au | 200µ" Sn/Pb | 200µ" Sn | |

### Fig. 3 — Single Row Socket

831-XX-0_ _-10-001000

**Specify # of pins** → 01-50

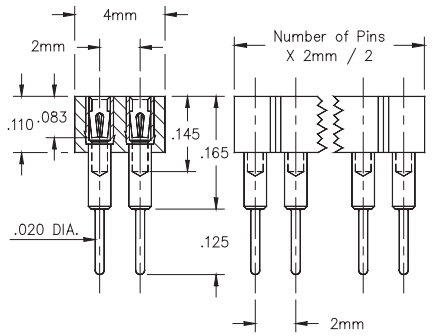


Fig. 4

### Fig. 4 — Double Row Socket

833-XX-_ _ _-10-001000

**Specify # of pins** → 002-100

*For Electrical, Mechanical & Enviromental Data, See pg. 4*

*XX=Plating Code See Below*

*For RoHS compliance select ◇ plating code.*

| SPECIFY PLATING CODE XX= | | | 93 | | | 43◇ | |
|---|---|---|---|---|---|---|---|
| Sleeve (Pin) | | | 200µ" Sn/Pb | | | 200µ"Sn | |
| Contact (Clip) | | | 30µ" Au | | | 30µ" Au | |

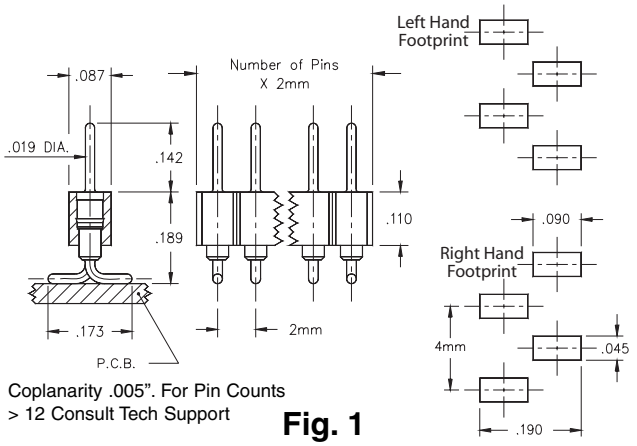


Coplanarity .005". For Pin Counts > 12 Consult Tech Support

**Fig. 1**

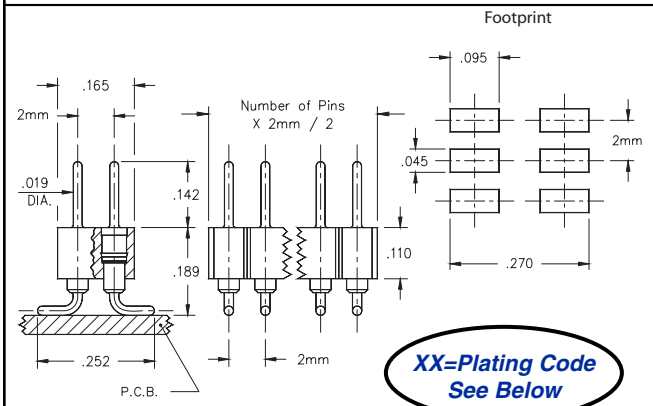


*XX=Plating Code See Below*

Coplanarity .005". For Pin Counts > 24 Consult Tech Support

**Fig. 2**

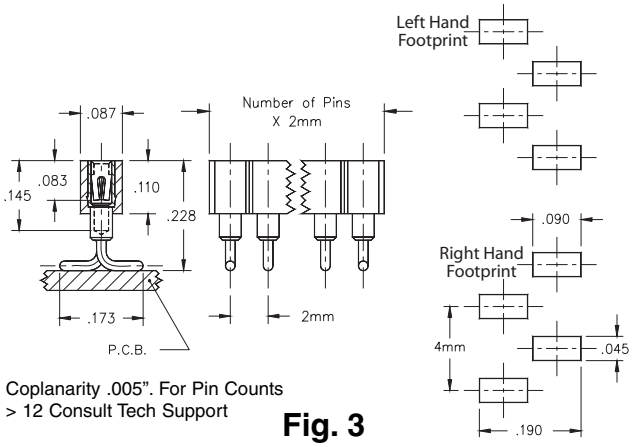


Coplanarity .005". For Pin Counts > 12 Consult Tech Support

**Fig. 3**

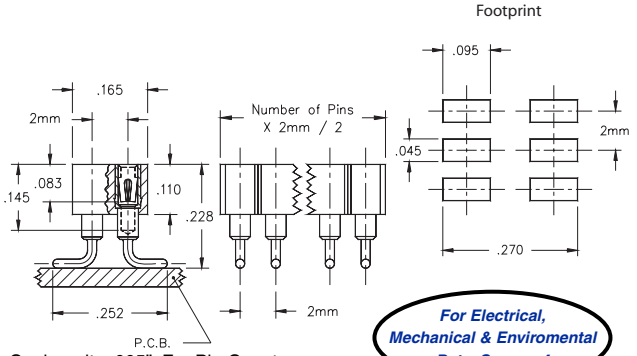


*For Electrical, Mechanical & Enviromental Data, See pg. 4*

Coplanarity .005". For Pin Counts > 24 Consult Tech Support

**Fig. 4**

- Headers (830 & 832) use MM# 6218 pins. See page 175 for details.
- Sockets (831 & 833) use MM# 1802 receptacles and accept pin diameters from .015-.025. See page 140 for details.
- Coplanarity .005" (Single Row max 12 pins; Double Row max 24 pins) for higher pin counts contact technical support.
- Insulators are high temp. thermoplastic.

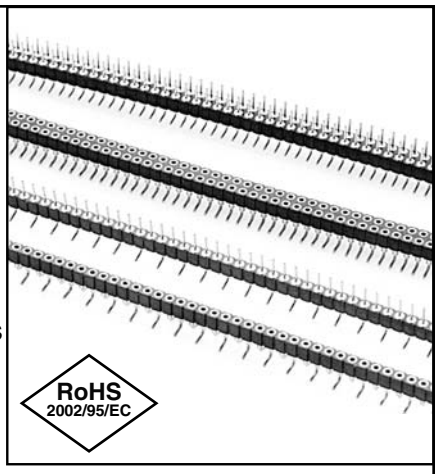


*For RoHS compliance select ◇ plating code.*

## Ordering Information

| | | | | | |
|---|---|---|---|---|---|
| **Fig. 1L** | **Single Row Header, Left Hand Footprint Odd or Even # of pins** | | | | |
| | 830-XX-0_ _-30-001000 | | | | |
| | **Specify # of pins** → 01-50 | | | | |
| **Fig. 1R** | **Single Row Header, Right Hand Footprint Even # of pins** | | | | |
| | 830-XX-0_ _-30-002000 | | | | |
| | **Specify even # of pins** → 02-50 | | | | |
| **Fig. 2** | **Double Row Header, Even # of pins** | | | | |
| | 832-XX-_ _ _-30-001000 | | | | |
| | **Specify even # of pins** → 004-100 | | | | |
| SPECIFY PLATING CODE XX= | | 10◇ | 90 | 40◇ | |
| Pin Plating | | 10µ" Au | 200µ" Sn/Pb | 200µ" Sn | |
| **Fig. 3L** | **Single Row Socket, Left Hand Footprint Odd or Even # of pins** | | | | |
| | 831-XX-0_ _-30-001000 | | | | |
| | **Specify # of pins** → 01-50 | | | | |
| **Fig. 3R** | **Single Row Socket, Right Hand Footprint Even # of pins** | | | | |
| | 831-XX-0_ _-30-002000 | | | | |
| | **Specify even # of pins** → 02-50 | | | | |
| **Fig. 4** | **Double Row Socket, Even # of pins** | | | | |
| | 833-XX-_ _ _-30-001000 | | | | |
| | **Specify even # of pins** → 004-100 | | | | |
| SPECIFY PLATING CODE XX= | | 93 | | 43◇ | |
| Sleeve (Pin) | | 200µ" Sn/Pb | | 200µ"Sn | |
| Contact (Clip) | | 30µ" Au | | 30µ" Au | |

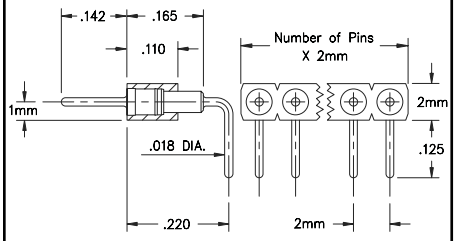


Fig. 1

- Series 830 & 832 use MM #3790 & MM #3796 pins. See page 176 for details.
- Series 831 & 833 use MM #1805 and MM #3805 receptacles and accept pin diameters from .015”-.025”. See page 140 for details.
- Receptacles use Hi-Rel, 6 finger BeCu #43 contact rated at 3 amps. See page 220 for details.
- Insulators are high temp. thermoplastic.

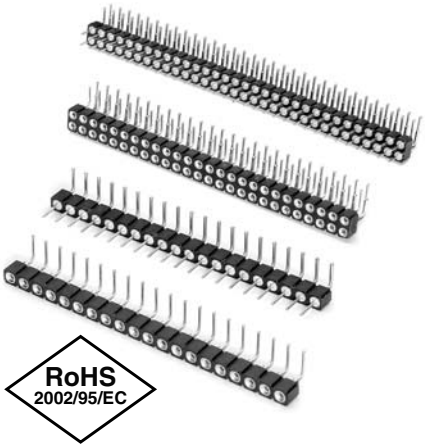


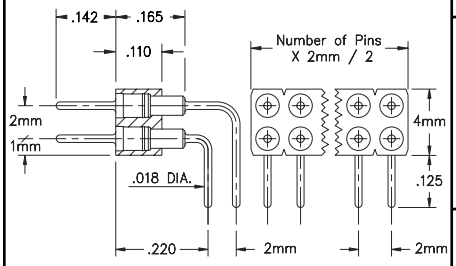


Fig. 2

## Ordering Information

| | | | | | |
|---|---|---|---|---|---|
| **Fig. 1** | **830...001 Single Row Right Angle Header** | | | | |
| | 830-10-0_ _-20-001000 | | | | |
| | **Specify # of pins** → 01-50 | | | | |
| **Fig. 2** | **832...001 Double Row Right Angle Header** | | | | |
| | 832-10-_ _ _-20-001000 | | | | |
| | **Specify # of pins** → 002-100 | | | | |

*For Electrical, Mechanical & Enviromental Data, See pg. 4*

*For RoHS compliance select ◇ plating code.*

| | | | | |
|---|---|---|---|---|
| PLATING CODE = | 10◇ | | | |
| Pin Plating | 10µ” Au | | | |

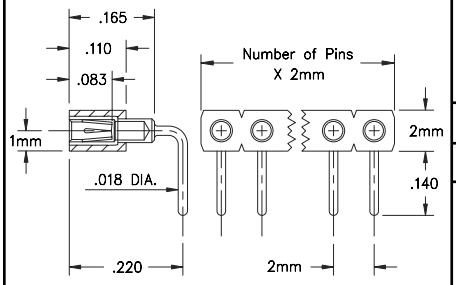


Fig. 3

| | | | | | |
|---|---|---|---|---|---|
| **Fig. 3** | **831...001 Single Row Right Angle Socket** | | | | |
| | 831-43-0 _ _-20-001000 | | | | |
| | **Specify # of pins** → 01-50 | | | | |
| **Fig. 4** | **833...001 Double Row Right Angle Socket** | | | | |
| | 833-43-_ _ _-20-001000 | | | | |
| | **Specify # of pins** → 002-100 | | | | |

*For Electrical, Mechanical & Enviromental Data, See pg. 4*

*For RoHS compliance select ◇ plating code.*

| | | | | | | | |
|---|---|---|---|---|---|---|---|
| PLATING CODE = | | | | | | 43◇ | |
| Sleeve (Pin) | | | | | | 200µ”Sn | |
| Contact (Clip) | | | | | | 30µ” Au | |

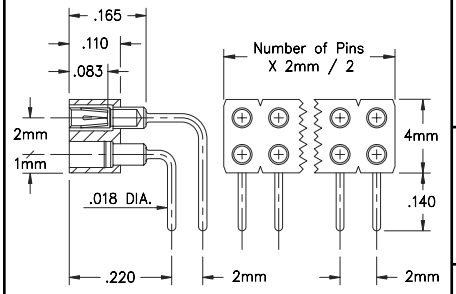


Fig. 4

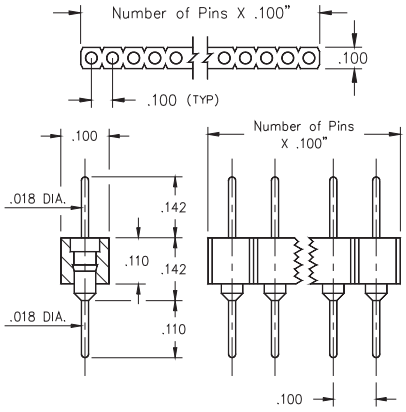


Fig. 1

- Series 3XX are available with straight and right angle solder tails.
- Series 350 & 399...009 use MM #3404 and #5011 pins. See pages 179 & 181 for details.
- Series 301, 310 & 399...003 use MM #0156, #1001 & #1103 receptacles. See pages 136 & 137 for details.
- Receptacles use Hi-Rel, 4 finger #30 BeCu contact rated at 3 amps. See page 218 for details.
- Insulators are high temp. thermoplastic.

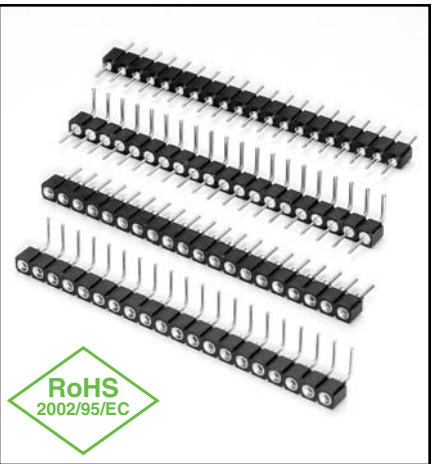


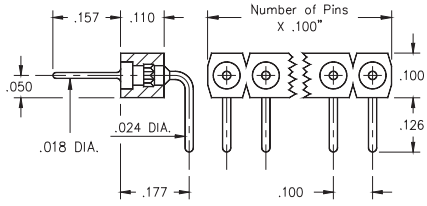


Fig. 2

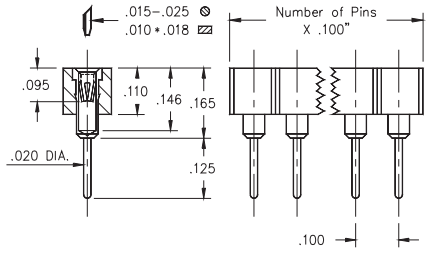


Fig. 3

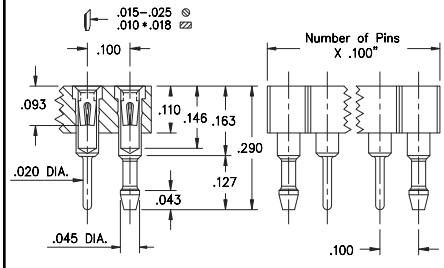


Fig. 4

★ 41, 91 & 99 Platings Non-Standard

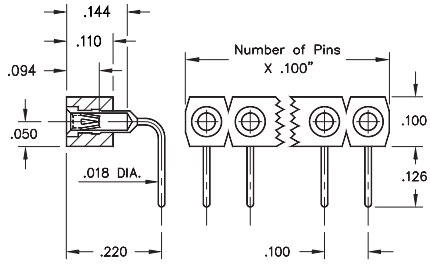


Fig. 5

## Ordering Information

| | | |
|---|---|---|
| **Fig. 1** | **Series 350...006** | **Straight Pin Header** |
| | 350-XX-1_ _-00-006000 | |
| | **Specify # of pins** → | 01-64 |
| **Fig. 2** | **Series 399...009** | **Right Angle Pin Header** |
| | 399-XX-1_ _-10-009000 | |
| | **Specify # of pins** → | 02-64 |

*For Electrical, Mechanical & Enviromental Data, See pg. 4*

*XX=Plating Code See Below*

*For RoHS compliance select ◇ plating code.*

| SPECIFY PLATING CODE XX= | 10◇ | 90 | 40◇ |
|---|---|---|---|
| Pin Plating | 10µ" Au | 200µ" Sn/Pb | 200µ" Sn |

| | | |
|---|---|---|
| **Fig. 3** | **Series 310...001** | **Straight Socket** |
| | 310-XX-1_ _-41-001000 | |
| | **Specify # of pins** → | 01-64 |
| **Fig. 4** | **Series 301...056** | **Socket w/ Retention Pegs** |
| | 301-XX-1_ _-41-560000 | |
| | **Specify # of pins** → | 01-64 |
| **Fig. 5** | **Series 399...003** | **Right Angle Socket** |
| | 399-XX-1_ _-10-003000 | |
| | **Specify # of pins** → | 01-64 |

*For Electrical, Mechanical & Enviromental Data, See pg. 4*

*XX=Plating Code See Below*

*For RoHS compliance select ◇ plating code.*

| SPECIFY PLATING CODE XX= | 13◇ | 91 | 93 | 99 | 41◇ | 43◇ | 44◇ |
|---|---|---|---|---|---|---|---|
| Sleeve (Pin) | 10µ" Au | 200µ" Sn/Pb | 200µ" Sn/Pb | 200µ"Sn/Pb | 200µ"Sn | 200µ"Sn | 200µ"Sn |
| Contact (Clip) | 30µ" Au | 10µ" Au | 30µ" Au | 200µ"Sn/Pb | 10µ" Au | 30µ" Au | 200µ"Sn |

# .100" Grid (.018" dia.) Pins, Straight and Right Angle Double Row

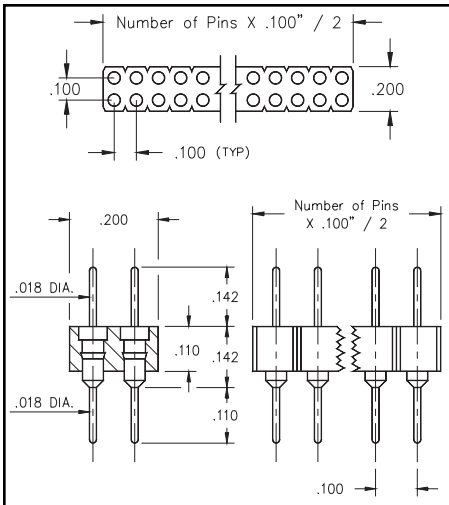


Fig. 1

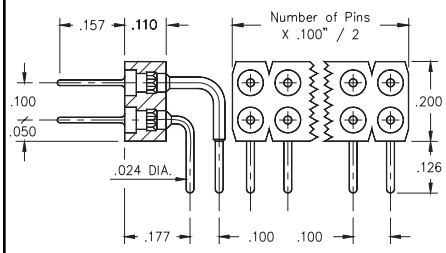


Fig. 2

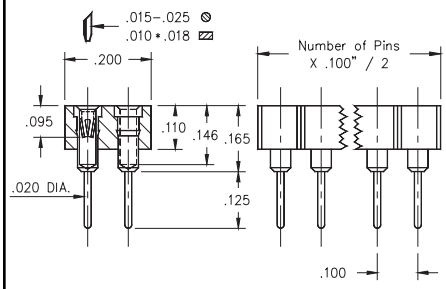


Fig. 3

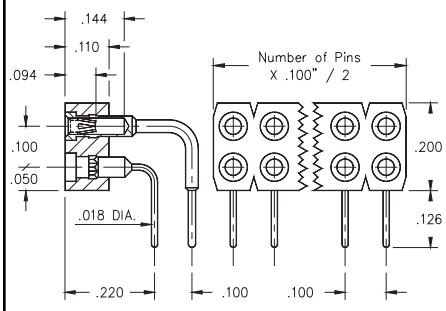


Fig. 4

- Series 4XX are available with straight and right angle solder tails.
- Series 450 & 499...009 use MM #3404 and #5011/5113 pins. See pages 179 & 181 for details.
- Series 410 & 499...003 use MM #1001 and #1103/1602 receptacles. See pages 136, 137 & 138 for details.
- Receptacles use Hi-Rel, 4 finger #30 BeCu contact rated at 3 amps. See page 218 for details.
- Insulators are high temp. thermoplastic.


## Ordering Information

**Fig. 1** — **Series 450...006 Straight Pin Header**

450-XX-2_ _-00-006000

**Specify # of pins** → 02-64

**Fig. 2** — **Series 499...009 Right Angle Pin Header**

499-10-2 _ _-10-009000

**Specify # of pins** → 02-64

*For Electrical, Mechanical & Enviromental Data, See pg. 4*

*XX=Plating Code See Below*

*For RoHS compliance select ◇ plating code.*

| SPECIFY PLATING CODE XX= | 10◇ | 90 | 40◇ |
|---|---|---|---|
| Pin Plating | 10µ" Au | 200µ" Sn/Pb | 200µ" Sn |

**Fig. 3** — **Series 410...001 Straight Socket**

410-XX-2_ _-41-001000

**Specify # of pins** → 02-64

**Fig. 4** — **Series 499...003 Right Angle Socket**

499-XX-2 _ _-10-003000

**Specify # of pins** → 02-64

*For Electrical, Mechanical & Enviromental Data, See pg. 4*

*XX=Plating Code See Below*

*For RoHS compliance select ◇ plating code.*

| SPECIFY PLATING CODE XX= | 13◇ | | | | | 43◇ | |
|---|---|---|---|---|---|---|---|
| Sleeve (Pin) | 10µ" Au | | | | | 200µ"Sn | |
| Contact (Clip) | 30µ" Au | | | | | 30µ" Au | |

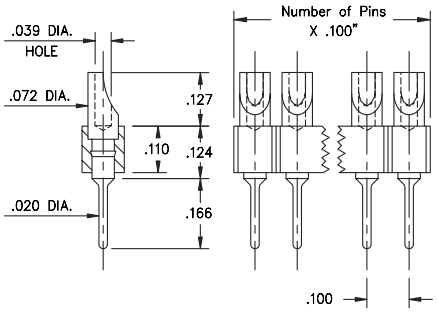


Fig. 1

- Series 380 & 480 use MM #8000 pins. See page 183 for details.
- Series 329 & 429 use MM #2954 pin receptacles and accept pin diameters from .015"-.025". See page 142 for details.
- Series 329 & 429 receptacles use Hi-Rel, 4 finger BeCu #30 contacts rated at 3 amps. See page 218 for details.
- Solder cups are pre-aligned.
- Insulators are high temp. thermoplastic.

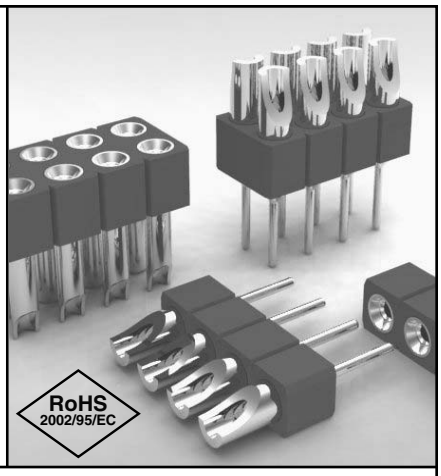


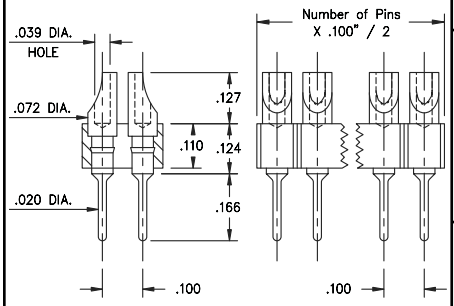


Fig. 2

## Ordering Information

**Fig. 1** — **Series 380...001 Solder Cup / Solder Tail**

380-XX-1_ _-00-001000

**Specify # of pins** → 01-64

**Fig. 2** — **Series 480...001 Solder Cup / Solder Tail**

480-10-2 _ _-00-001000

**Specify # of pins** → 02-64

*For Electrical, Mechanical & Enviromental Data, See pg. 4*

*XX=Plating Code See Below*

*For RoHS compliance select ◇ plating code.*

| SPECIFY PLATING CODE XX= | 10◇ | 90◇ | 40◇ | |
|---|---|---|---|---|
| Pin Plating | 10µ" Au | 200µ" Sn/Pb | 200µ" Sn | |

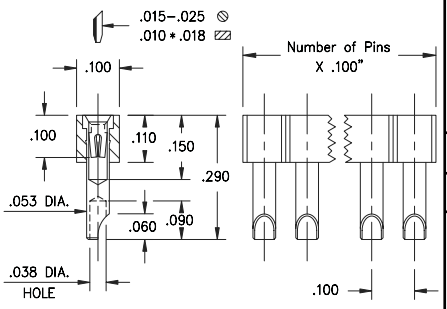


Fig. 3

**Fig. 3** — **Series 329...540 Solder Cup Sockets**

329-43-1 _ _-41-540000

**Specify # of pins** → 01-64

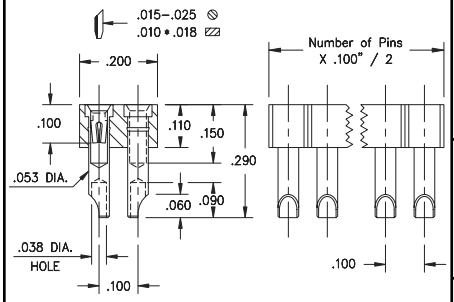


Fig. 4

**Fig. 4** — **Series 429...540 Solder Cup Sockets**

429-43-2 _ _-41-540000

**Specify # of pins** → 02-64

*For Electrical, Mechanical & Enviromental Data, See pg. 4*

*For RoHS compliance select ◇ plating code.*

| PLATING CODE = | | | | | 43◇ | | |
|---|---|---|---|---|---|---|---|
| Sleeve (Pin) | | | | | 200µ"Sn | | |
| Contact (Clip) | | | | | 30µ" Au | | |

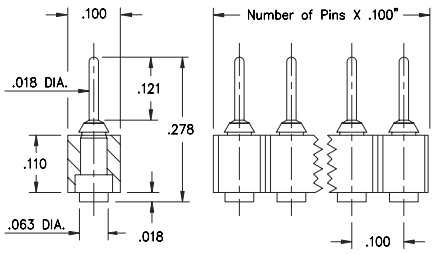


Coplanarity .005". For Pin Counts >10 positions consult Technical Support.

**Fig. 1**

- Series 329 and 429 pin interconnects offer vertical Surface Mount MM #2956-X solder tails. See page 185 for details.
- Series 340 Surface mount sockets use MM #4078 pins. Series 414 sockets use MM #1434 pins. See pages 133 and 138 for details.
- Series 340 and 414 receptacles use Hi-Rel, 4-finger BeCu #30 contacts rated at 3 amps. Receptacles accept .015"-.025" diameter pins. See page 218 for details.
- Insulators are high temp. thermoplastic.

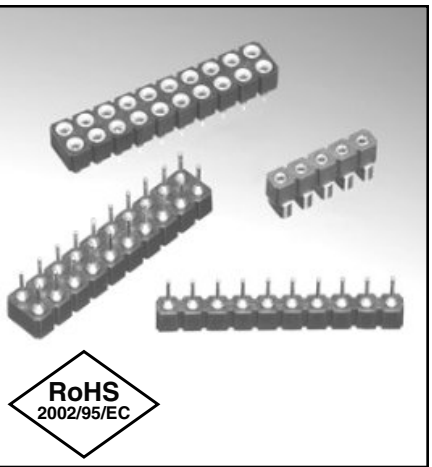


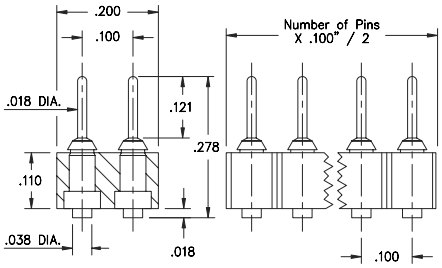


Coplanarity .005". For Pin Counts >10 positions consult Technical Support.

**Fig. 2**

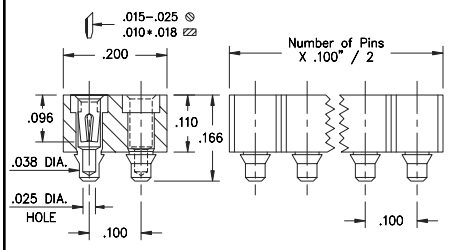


Coplanarity .005". For Pin Counts >10 positions consult Technical Support.

**Fig. 3**

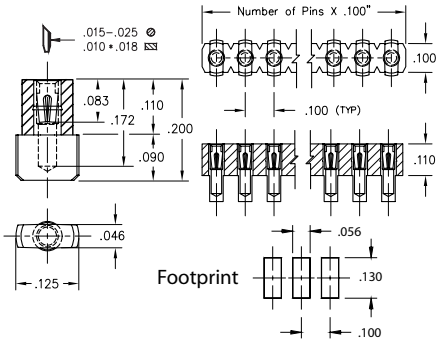


Coplanarity .005". For Pin Counts >10 positions consult Technical Support.

**Fig. 4**

## Ordering Information

### Fig. 1 — Series 329...560 Surface Mount Pin Header

329-10-1_ _-00-560000

**Specify # of pins** → 02-64

### Fig. 2 — Series 429...560 Surface Mount Pin Header

429-10-2 _ _-00-560000

**Specify # of pins** → 04-72

*For Electrical, Mechanical & Enviromental Data, See pg. 4*

*For RoHS compliance select ◇ plating code.*

| | | | | |
|---|---|---|---|---|
| PLATING CODE = | 10◇ | | | |
| Pin Plating | 10 µ" Au | | | |

### Fig. 3 — Series 414...117 Surface Mount Socket

414-43-2 _ _-41-117000

**Specify # of pins** → 04-72

### Fig. 4 — Series 340...780 Surface Mount Socket

340-43-1 _ _-30-780100

**Specify # of pins** → 02-64

*For Electrical, Mechanical & Enviromental Data, See pg. 4*

*For RoHS compliance select ◇ plating code.*

| | | | | | | | |
|---|---|---|---|---|---|---|---|
| PLATING CODE = | | | | | | 43◇ | |
| Sleeve (Pin) | | | | | | 200µ"Sn | |
| Contact (Clip) | | | | | | 30 µ" Au | |

**Mates w/ Series 310...023 Surface Mount Z-Bend Socket (See Fig. 3)**

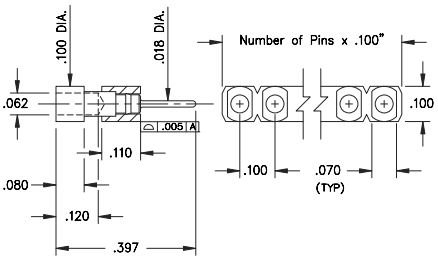


Coplanarity .005". For Pin Counts >10 positions consult Technical Support.

**Fig. 1**

- Series 351 and 800 horizontal Surface Mount headers are availble with .018" dia. pluggable pins (MM #5102) and .028" dia. pluggable pins (MM #1502). See page 185 for details.
- Series 310 horizontal Surface Mount Z-Bend sockets use MM #1023 receptacles that accept pin diameters from .015"-.025". Series 801 use MM #1303 receptacles that accept pin diameters from .025"-.037" and .025" square leads. See pages 142 and 150 for details.
- Insulators are high temp. thermoplastic.


**Mates w/ Series 801...002 Surface Mount Z-Bend Socket (See Fig. 4)**

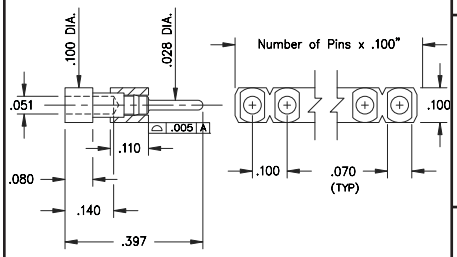


Coplanarity .005". For Pin Counts >10 positions consult Technical Support.

**Fig. 2**

**Mates w/ Series 351...002 Surface Mount Header (See Fig. 1)**

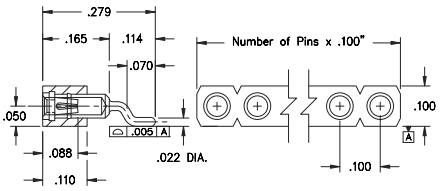


Coplanarity .005". For Pin Counts >10 positions consult Technical Support.

**Fig. 3**

**Mates w/ Series 800...002 Surface Mount Header (See Fig. 2)**

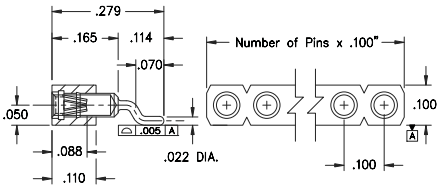


Coplanarity .005". For Pin Counts >10 positions consult Technical Support.

**Fig. 4**

## Ordering Information

**Fig. 1** — **Series 351...002 .018 Dia. Surface Mount Header**

351-10-1_ _-40-002000

**Specify # of pins** → 02-10

**Fig. 2** — **Series 800...002 .028 Dia. Surface Mount Header**

800-10-0 _ _-40-002000

**Specify # of pins** → 02-10

*For Electrical, Mechanical & Enviromental Data, See pg. 4*

*For RoHS compliance select ◇ plating code.*

| PLATING CODE = | 10◇ | | | |
|---|---|---|---|---|
| Pin Plating | 10 µ" Au | | | |

**Fig. 3** — **Series 310...023 .018 Dia. SMT Z-Bend Socket**

310-43-1 _ _-40-023000

**Specify # of pins** → 02-10

**Fig. 4** — **Series 801...002 .028 Dia. SMT Z-Bend Socket**

801-XX-0 _ _-40-002000

**Specify # of pins** → 02-10

*For Electrical, Mechanical & Enviromental Data, See pg. 4*

*XX=Plating Code See Below*

*For RoHS compliance select ◇ plating code.*

| SPECIFY PLATING CODE XX= | | | 93 | 99 | | 43◇ | 44◇ |
|---|---|---|---|---|---|---|---|
| Sleeve (Pin) | | | 200µ" Sn/Pb | 200µ" Sn/Pb | | 200µ" Sn | 200µ" Sn |
| Contact (Clip) | | | 30µ" Au | 200µ" Sn/Pb | | 30µ" Au | 200µ" Sn |

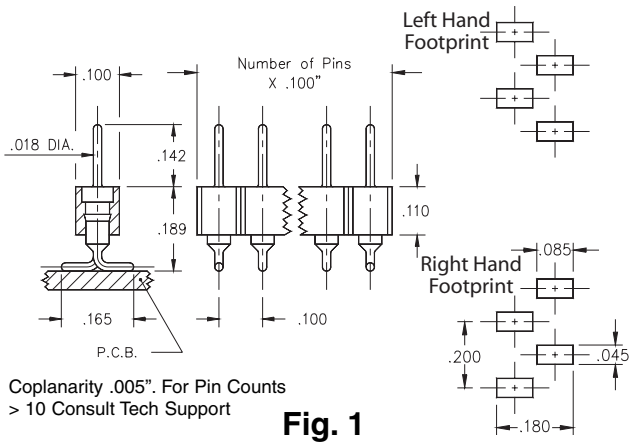


Coplanarity .005". For Pin Counts > 10 Consult Tech Support

**Fig. 1**

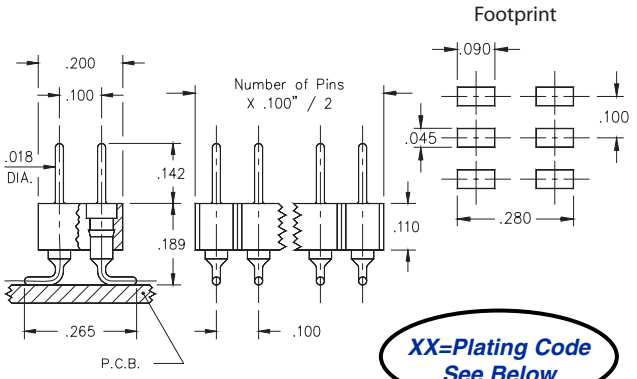


*XX=Plating Code See Below*

Coplanarity .005". For Pin Counts > 20 Consult Tech Support

**Fig. 2**

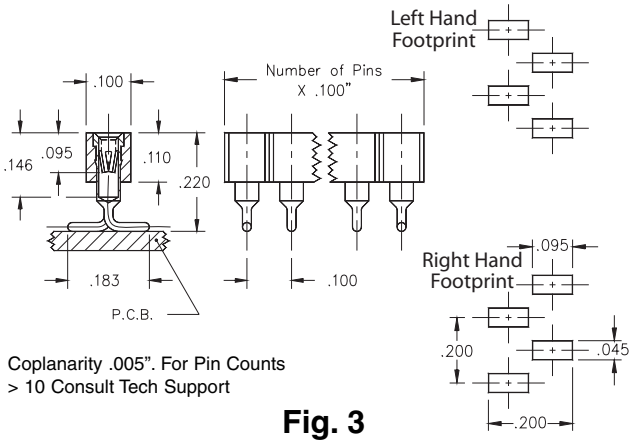


Coplanarity .005". For Pin Counts > 10 Consult Tech Support

**Fig. 3**

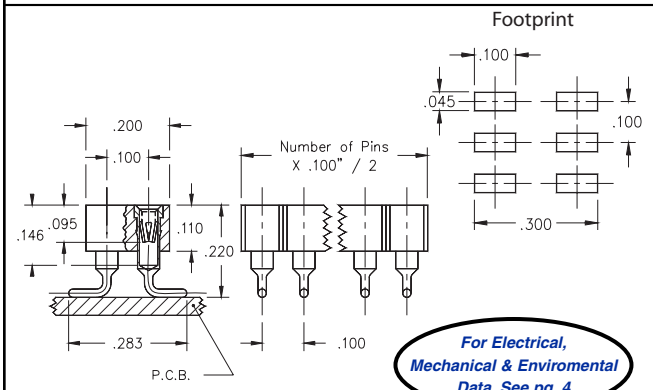


*For Electrical, Mechanical & Enviromental Data, See pg. 4*

Coplanarity .005". For Pin Counts > 20 Consult Tech Support

**Fig. 4**

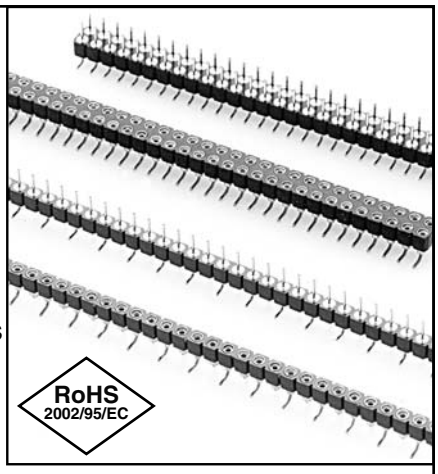


- Headers (350 & 450) use MM# 3404 pins. See page 179 for details.
- Sockets (310 & 410) use MM# 1005 receptacles and accept pin diameters from .015-.025. See page 137 for details.
- Coplanarity .005" (Single Row max 10 pins; Double Row max 20 pins). For higher pin counts contact technical support.
- Insulators are high temp. thermoplastic.

*For RoHS compliance select ◇ plating code.*

## Ordering Information

| | | | | |
|---|---|---|---|---|
| **Fig. 1L** | **Single Row Header, Left Hand Footprint Odd or Even # of pins** | | | |
| | 350-XX-1_ _-00-106000 | | | |
| | **Specify # of pins** → 02-64 | | | |
| **Fig. 1R** | **Single Row Header, Right Hand Footprint Even # of pins** | | | |
| | 350-XX-1_ _-00-107000 | | | |
| | **Specify even # of pins** → 02-64 | | | |
| **Fig. 2** | **Double Row Header, Even # of pins** | | | |
| | 450-XX-2 _ _-00-106000 | | | |
| | **Specify even # of pins** → 04-72 | | | |
| SPECIFY PLATING CODE XX= | | 10◇ | 90 | 40◇ |
| Pin Plating | | 10µ" Au | 200µ" Sn/Pb | 200µ" Sn |
| **Fig. 3L** | **Single Row Socket, Left Hand Footprint Odd or Even # of pins** | | | |
| | 310-43-1_ _-41-105000 | | | |
| | **Specify # of pins** → 02-64 | | | |
| **Fig. 3R** | **Single Row Socket, Right Hand Footprint Even # of pins** | | | |
| | 310-43-1_ _-41-107000 | | | |
| | **Specify even # of pins** → 02-64 | | | |
| **Fig. 4** | **Double Row Socket, Even # of pins** | | | |
| | 410-43-2 _ _-41-105000 | | | |
| | **Specify even # of pins** → 04-72 | | | |

| | | | | | |
|---|---|---|---|---|---|
| PLATING CODE = | | | | 43◇ | |
| Sleeve (Pin) | | | | 200µ"Sn | |
| Contact (Clip) | | | | 30µ" Au | |

# .100" Grid (.025" dia.) Low Profile Headers & Versatile Sockets
## Single and Double Row

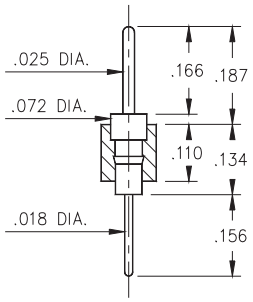


Fig. 1

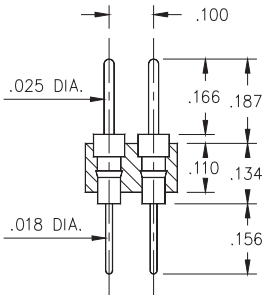


Fig. 2

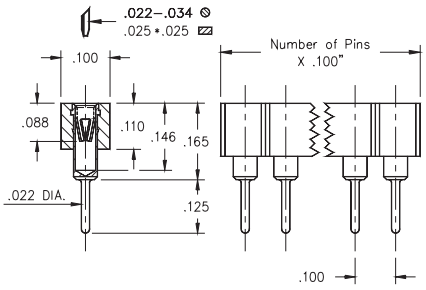


Fig. 3

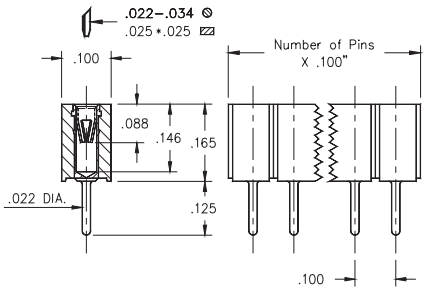


Fig. 4

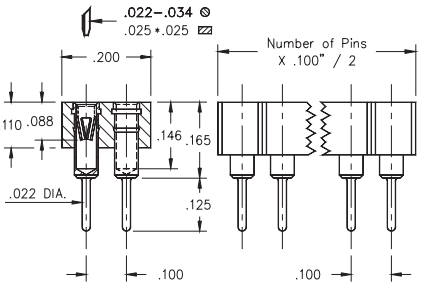


Fig. 5

- Series 350 & 450 single and double row headers use MM #0290 pins. See page 182 for details.
- Series 801 & 803 single and double row low profile sockets use MM #1303 pins. See page 150 for details.
- Series 801 and 803 receptacles use Hi-Rel, 6-finger BeCu #16 contacts rated at 4.5 amps. Receptacles accept .025" diameter and .025" square pins. See page 221 for details.
- Insulators are high temp. thermoplastic.

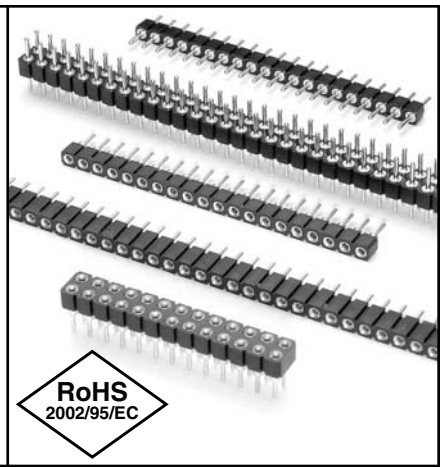


## Ordering Information

| | | |
|---|---|---|
| **Fig. 1** | **Single Row** | **.025 Pin / .018 Solder Tail** |
| | 350-XX-1_ _-00-001000 | |
| | **Specify # of pins** → | 01-64 |
| **Fig. 2** | **Double Row** | **.025 Pin / .018 Solder Tail** |
| | 450-XX-2 _ _-00-001000 | |
| | **Specify # of pins** → | 02-64 |

*For Electrical, Mechanical & Enviromental Data, See pg. 4*

*XX=Plating Code See Below*

*For RoHS compliance select ◇ plating code.*

| SPECIFY PLATING CODE XX= | 10◇ | 90 | 40◇ |
|---|---|---|---|
| Pin Plating | 10µ" Au | 200µ" Sn/Pb | 200µ" Sn |

| | | |
|---|---|---|
| **Fig. 3** | **Single Row** | **Low Profile Socket** (short insulator) |
| | 801-43-0 _ _-10-003000 | |
| | **Specify # of pins** → | 01-64 |
| **Fig. 4** | **Single Row** | **Low Profile Socket** (long insulator) |
| | 801-43-0 _ _-10-013000 | |
| | **Specify # of pins** → | 01-36 |
| **Fig. 5** | **Double Row** | **Low Profile Socket** |
| | 803-43-0 _ _-10-003000 | |
| | **Specify # of pins** → | 02-72 |

*For Electrical, Mechanical & Enviromental Data, See pg. 4*

*For RoHS compliance select ◇ plating code.*

| PLATING CODE = | | | | | | 43◇ | |
|---|---|---|---|---|---|---|---|
| Sleeve (Pin) | | | | | | 200µ"Sn | |
| Contact (Clip) | | | | | | 30µ" Au | |

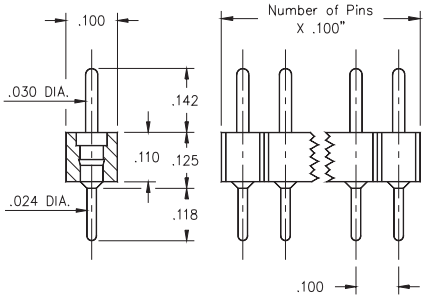


Fig. 1

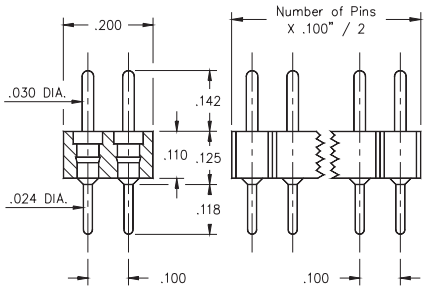


Fig. 2

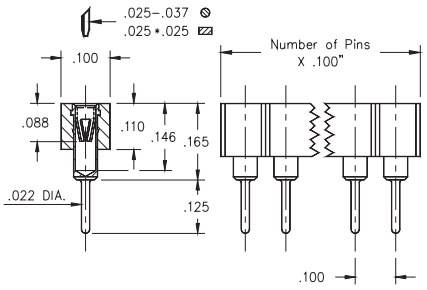


Fig. 3

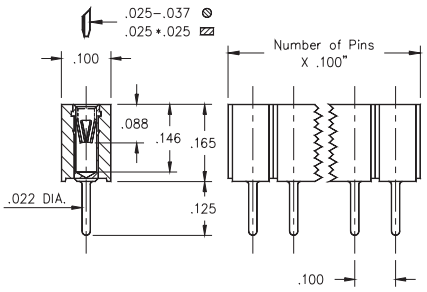


Fig. 4

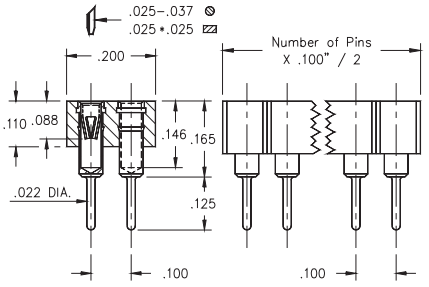


Fig. 5

- Series 800 and 802 single and double row pin headers use MM #5016 pins. See page 182 for details.
- Series 801 and 803 single and double row sockets use MM #1303 pins. See page 150 for details.
- Series 801 and 803 receptacles use Hi-Rel, 6-finger BeCu #47 contacts rated at 4.5 amps. Receptacles accept .025" diameter and .025" square pins. See page 221 for details.
- Insulators are high temp. thermoplastic.

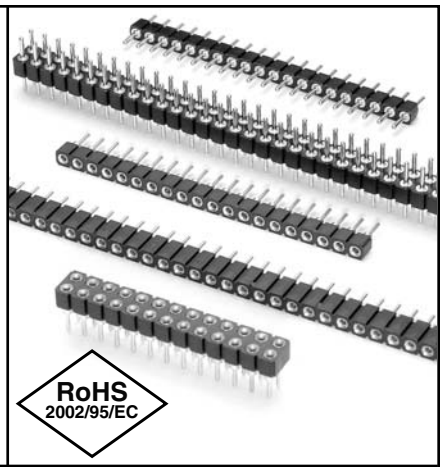


## Ordering Information

| | | |
|---|---|---|
| **Fig. 1** | **Single Row** | **Low Profile Pin Header** |
| | 800-XX-0_ _-10-002000 | |
| | **Specify # of pins** → | 01-64 |
| **Fig. 2** | **Double Row** | **Low Profile Pin Header** |
| | 802-XX-0 _ _-10-002000 | |
| | **Specify # of pins** → | 02-64 |

*For Electrical, Mechanical & Enviromental Data, See pg. 4*

*XX=Plating Code See Below*

*For RoHS compliance select ◇ plating code.*

| SPECIFY PLATING CODE XX= | 10◇ | 90 | 40◇ |
|---|---|---|---|
| Pin Plating | 10µ" Au | 200µ" Sn/Pb | 200µ" Sn |

| | | |
|---|---|---|
| **Fig. 3** | **Single Row** | **Low Profile Socket** (short insulator) |
| | 801-XX-0 _ _-10-002000 | |
| | **Specify # of pins** → | 01-64 |
| **Fig. 4** | **Single Row** | **Low Profile Socket** (long insulator) |
| | 801-XX-0 _ _-10-012000 | |
| | **Specify # of pins** → | 01-36 |
| **Fig. 5** | **Double Row** | **Low Profile Socket** |
| | 803-XX-0 _ _-10-002000 | |
| | **Specify # of pins** → | 02-72 |

*For Electrical, Mechanical & Enviromental Data, See pg. 4*

*XX=Plating Code See Below*

*For RoHS compliance select ◇ plating code.*

| SPECIFY PLATING CODE XX= | | | 93 | 99 | | 43◇ | |
|---|---|---|---|---|---|---|---|
| Sleeve (Pin) | | | 200µ" Sn/Pb | 200µ"Sn/Pb | | 200µ"Sn | |
| Contact (Clip) | | | 30µ" Au | 200µ"Sn/Pb | | 30µ" Au | |

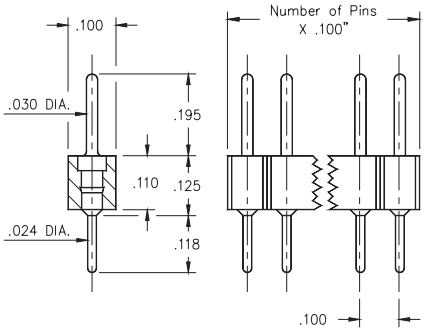


Fig. 1

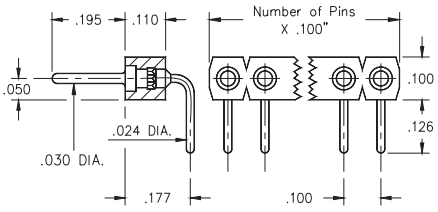


Fig. 2

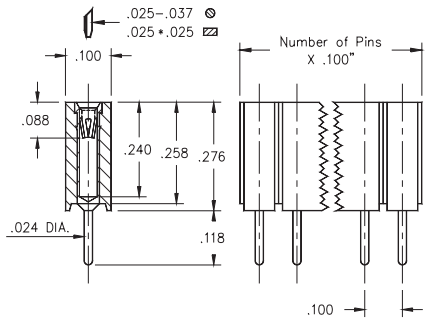


Fig. 3

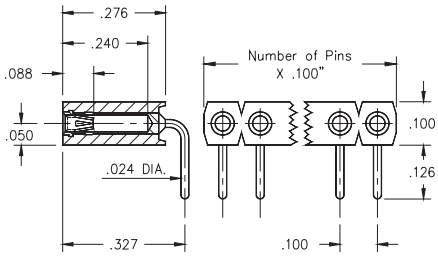


Fig. 4

- Pin interconnects available with straight MM #7007 or right angle MM #5005 solder tails. See page 182 for details.
- Sockets are available with straight MM #1304 or right angle MM #1305 solder tails. See pages 148 & 149 for details.
- MM #1304 and MM #1305 receptacles use Hi-Rel, 6-finger BeCu #47 contacts rated at 4.5 amps. Receptacles accept .030" diameter and .025" square pins. See page 221 for details.
- Insulators are high temp. thermoplastic.

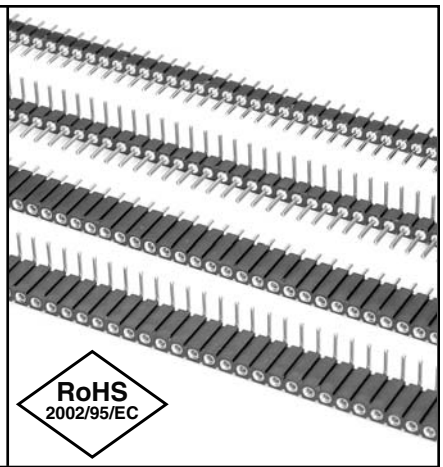


## Ordering Information

**Fig. 1** — **Series 800...10-001 Straight Pin Header**

800-XX-0_ _-10-001000

**Specify # of pins** → 01-64

**Fig. 2** — **Series 800...20-001 Right Angle Pin Header**

800-XX-0 _ _-20-001000

**Specify # of pins** → 02-64

*For Electrical, Mechanical & Enviromental Data, See pg. 4*

*XX=Plating Code See Below*

*For RoHS compliance select ◇ plating code.*

| SPECIFY PLATING CODE XX= | 10◇ | 90 | 40◇ |
|---|---|---|---|
| Pin Plating | 10µ" Au | 200µ" Sn/Pb | 200µ" Sn |

**Fig. 3** — **Series 801...10-001 Straight Socket**

★ 44 Plating Non-Standard — 801-XX-0 _ _-10-001000

**Specify # of pins** → 01-50

**Fig. 4** — **Series 801...20-001 Right Angle Socket**

★ 44 Plating Non-Standard — 801-XX-0 _ _-20-001000

**Specify # of pins** → 01-50

*For Electrical, Mechanical & Enviromental Data, See pg. 4*

*XX=Plating Code See Below*

*For RoHS compliance select ◇ plating code.*

| SPECIFY PLATING CODE XX= | | | 93 | 99 | | 43◇ | 44◇ |
|---|---|---|---|---|---|---|---|
| Sleeve (Pin) | | | 200µ" Sn/Pb | 200µ" Sn/Pb | | 200µ" Sn | 200µ" Sn |
| Contact (Clip) | | | 30µ" Au | 200µ" Sn/Pb | | 30µ" Au | 200µ" Sn |

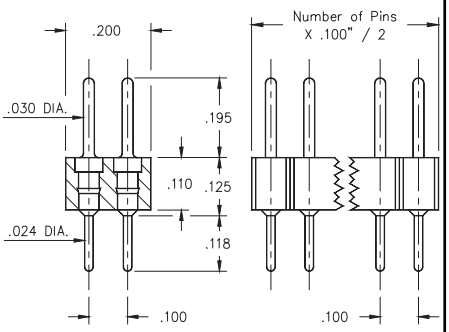


Fig. 1

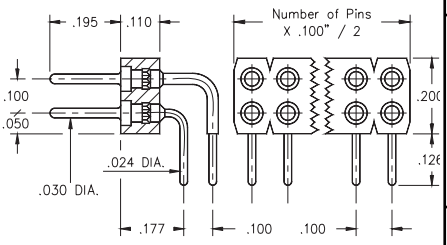


Fig. 2

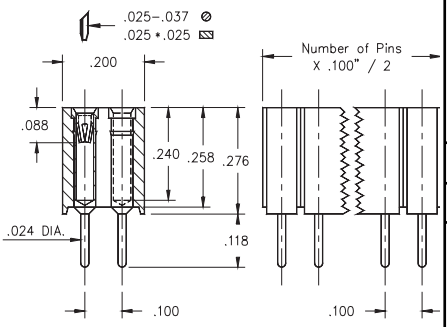


Fig. 3

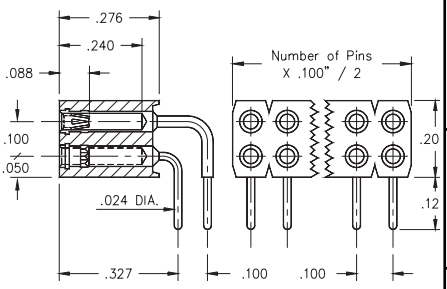


Fig. 4

- Pin interconnects available with straight MM #7007 or right angle MM #5005/5107 solder tails. See page 182 for details.
- Sockets are available with straight MM #1304 or right angle MM #1305/1306 solder tails. See pages 148 & 149 for details.
- MM #1304, #1305 & #1306 receptacles use use Hi-Rel, 6-finger BeCu #47 contacts rated at 4.5 amps. Receptacles accept .030" diameter and .025" square pins. See page 221 for details.
- Insulators are high temp. thermoplastic.

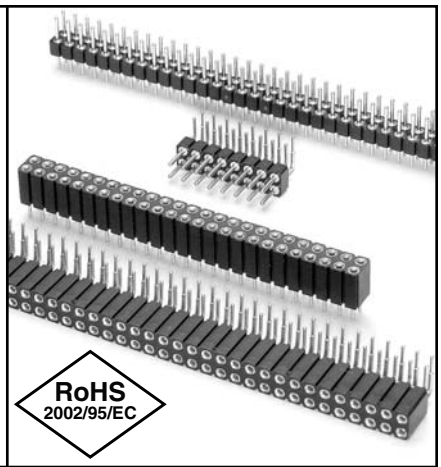


## Ordering Information

**Fig. 1** — **Series 802...10-001 Straight Pin Header**

802-XX-0_ _-10-001000

**Specify # of pins** → 02-64

**Fig. 2** — **Series 802...20-001 Right Angle Pin Header**

802-XX-0 _ _-20-001000

**Specify # of pins** → 02-64

*For Electrical, Mechanical & Enviromental Data, See pg. 4*

*XX=Plating Code See Below*

*For RoHS compliance select ◇ plating code.*

| SPECIFY PLATING CODE XX= | 10◇ | 90 | 40◇ |
|---|---|---|---|
| Pin Plating | 10µ" Au | 200µ" Sn/Pb | 200µ" Sn |

**Fig. 3** — **Series 803...10-001 Straight Socket**

803-XX-_ _ _-10-001000

**Specify # of pins** → 002-100

**Fig. 4** — **Series 803...20-001 Right Angle Socket**

803-XX-_ _ _-20-001000

**Specify # of pins** → 002-100

*For Electrical, Mechanical & Enviromental Data, See pg. 4*

*XX=Plating Code See Below*

*For RoHS compliance select ◇ plating code.*

| SPECIFY PLATING CODE XX= | | | 93 | 99 | | 43◇ | |
|---|---|---|---|---|---|---|---|
| Sleeve (Pin) | | | 200µ" Sn/Pb | 200µ" Sn/Pb | | 200µ" Sn | |
| Contact (Clip) | | | 30µ" Au | 200µ" Sn/Pb | | 30µ" Au | |

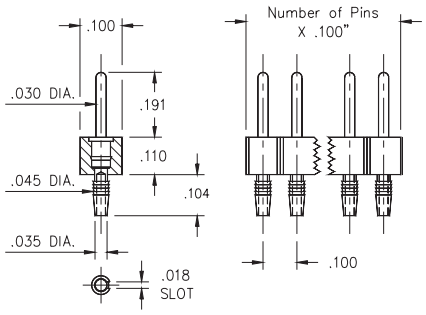


Fig. 1

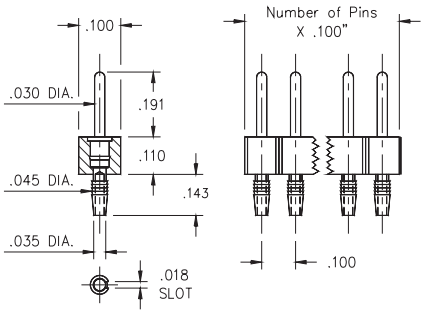


Fig. 2

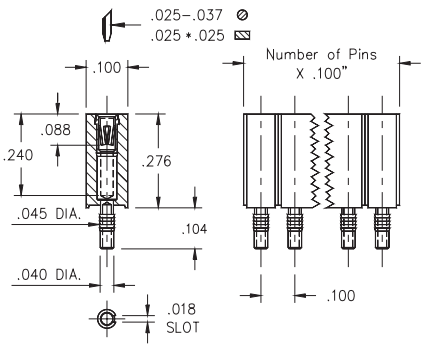


Fig. 3

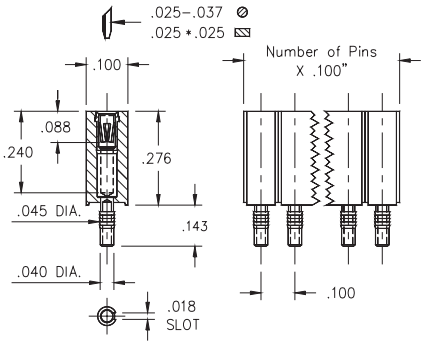


Fig. 4

- The unique compliant tail pins conform to .040"±.003" finished hole without stressing inner layers. Patent No. 4,799,904
- Series 800 pin headers are offered in two tail lengths for .060"-.100" (MM #5601) and .090"-.130" (MM #5602) thick panels. See page 187 for details.
- Series 801 sockets MM #4614 or #4615 use Hi-Rel, 6-finger BeCu #47 contacts rated at 4.5 amps. Receptacles accept .030" diameter pins & .025" square pins. See page 221 for details.
- Insulators are high temp. thermoplastic.

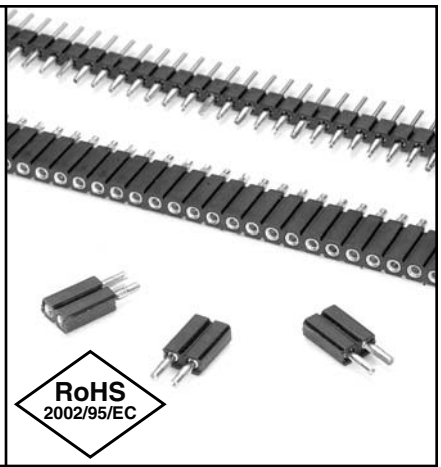


## Ordering Information

| | |
|---|---|
| **Fig. 1** | **Compliant Tail Pin Header for .060 - .100" thick boards**<br>800-XX-0 _ _-61-001000<br>**Specify # of pins** → 01-64 |
| **Fig. 2** | **Compliant Tail Pin Header for .090 - .130" thick boards**<br>800-XX-0 _ _-62-001000<br>**Specify # of pins** → 01-64 |

*For Electrical, Mechanical & Enviromental Data, See pg. 4*

*XX=Plating Code See Below*

*For RoHS compliance select ◇ plating code.*

| SPECIFY PLATING CODE XX= | 10◇ | 90 | 40◇ |
|---|---|---|---|
| Pin Plating | 10µ" Au | 200µ" Sn/Pb | 200µ" Sn |

| | |
|---|---|
| **Fig. 3** | **Compliant Tail Socket for .060 - .100" thick boards**<br>801-XX-0 _ _-61-001000<br>**Specify # of pins** → 01-50 |
| **Fig. 4** | **Compliant Tail Socket for .090 - .130" thick boards**<br>801-XX-0 _ _-62-001000<br>**Specify # of pins** → 01-50 |

*For Electrical, Mechanical & Enviromental Data, See pg. 4*

*XX=Plating Code See Below*

*For RoHS compliance select ◇ plating code.*

| SPECIFY PLATING CODE XX= | | | 93 | 99 | | 43◇ | |
|---|---|---|---|---|---|---|---|
| Sleeve (Pin) | | | 200µ" Sn/Pb | 200µ" Sn/Pb | | 200µ" Sn | |
| Contact (Clip) | | | 30µ" Au | 200µ" Sn/Pb | | 30µ" Au | |

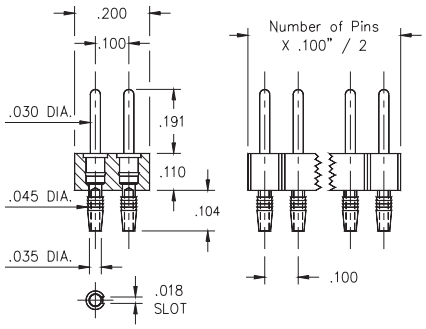


Fig. 1

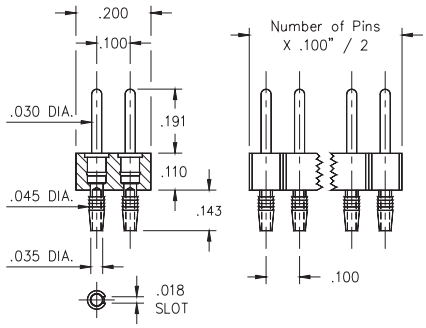


Fig. 2

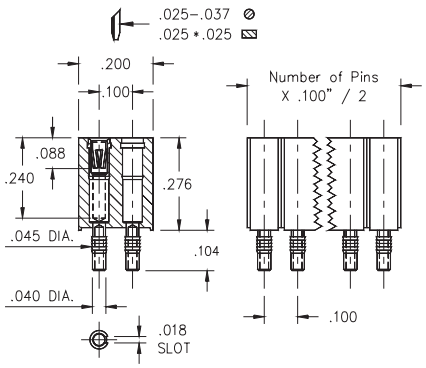


Fig. 3

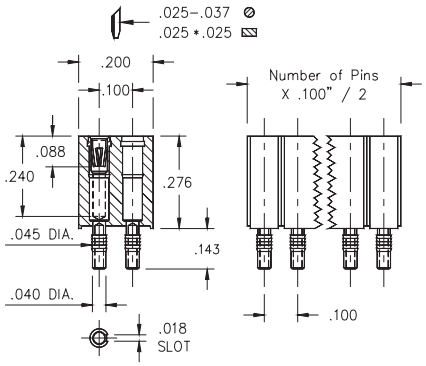


Fig. 4

- The unique compliant tail pins conform to .040"±.003" finished hole without stressing inner layers. Patent No. 4,799,904
- Series 802 pin headers are offered in two tail lengths for .060"-.100" (MM #5601) and .090"-.130" (MM #5602) thick panels. See page 187 for details.
- Series 803 sockets MM #4614 or #4615 use Hi-Rel, 6-finger BeCu #47 contacts rated at 4.5 amps. Receptacles accept .030" diameter pins & .025" square pins. See page 221 for details.
- Insulators are high temp. thermoplastic.

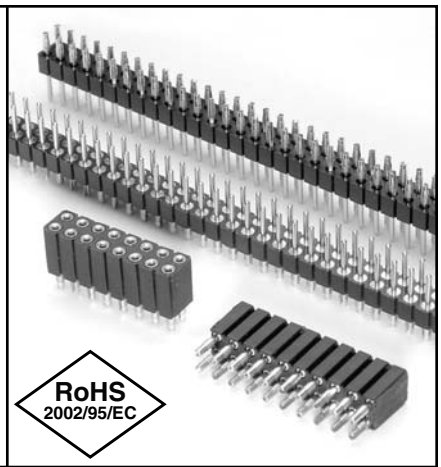


## Ordering Information

| | |
|---|---|
| **Fig. 1** | **Compliant Tail Pin Header for .060 - .100" thick boards**<br>802-XX-0 _ _-61-001000<br>**Specify # of pins** → 02-64 |
| **Fig. 2** | **Compliant Tail Pin Header for .090 - .130" thick boards**<br>802-XX-0 _ _-62-001000<br>**Specify # of pins** → 02-64 |

*For Electrical, Mechanical & Enviromental Data, See pg. 4*

*XX=Plating Code See Below*

*For RoHS compliance select ◇ plating code.*

| SPECIFY PLATING CODE XX= | 10◇ | 90 | 40◇ | |
|---|---|---|---|---|
| Pin Plating | 10µ" Au | 200µ" Sn/Pb | 200µ" Sn | |

| | |
|---|---|
| **Fig. 3** | **Compliant Tail Socket for .060 - .100" thick boards**<br>803-XX-_ _ _-61-001000<br>**Specify # of pins** → 002-100 |
| **Fig. 4** | **Compliant Tail Socket for .090 - .130" thick boards**<br>803-XX-_ _ _-62-001000<br>**Specify # of pins** → 002-100 |

*For Electrical, Mechanical & Enviromental Data, See pg. 4*

*XX=Plating Code See Below*

*For RoHS compliance select ◇ plating code.*

| SPECIFY PLATING CODE XX= | | | 93 | 99 | | 43◇ | |
|---|---|---|---|---|---|---|---|
| Sleeve (Pin) | | | 200µ" Sn/Pb | 200µ"Sn/Pb | | 200µ"Sn | |
| Contact (Clip) | | | 30µ" Au | 200µ"Sn/Pb | | 30µ" Au | |

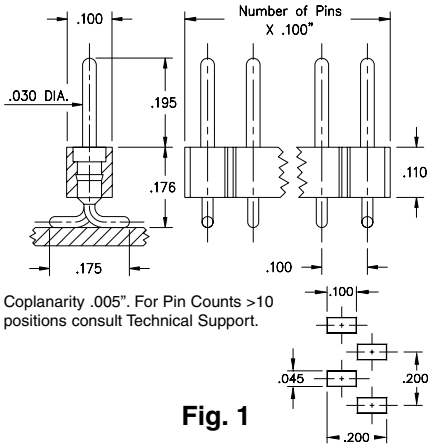


Coplanarity .005". For Pin Counts >10 positions consult Technical Support.

**Fig. 1**

- Series 800 & 802 use MM #7007 pins. See page 182 for details.
- Series 801 & 803 use MM #1304 receptacles and accept pin diameters from .025"-.037" and .025" square pins. See page 148 for details.
- Receptacles use Hi-Rel, 6 finger BeCu #47 contact rated at 4.5 amps. See page 221 for details.
- Insulators are high temp. thermoplastic.

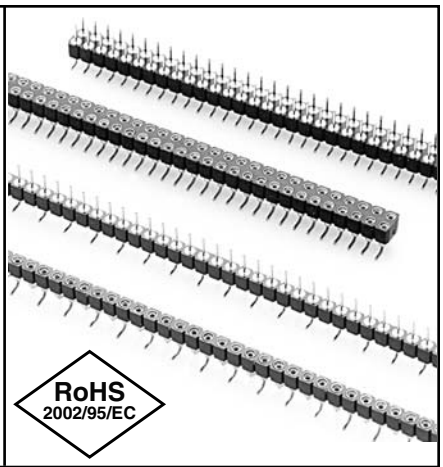


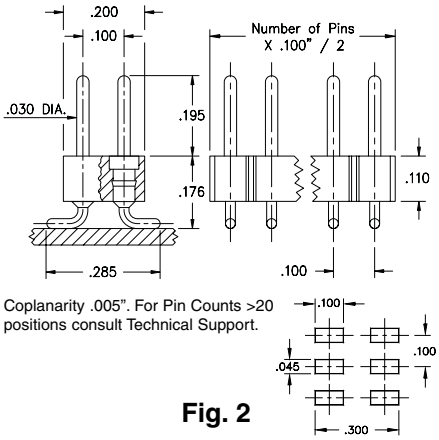


Coplanarity .005". For Pin Counts >20 positions consult Technical Support.

**Fig. 2**

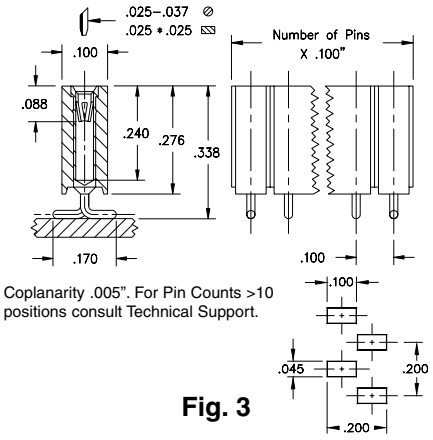


Coplanarity .005". For Pin Counts >10 positions consult Technical Support.

**Fig. 3**

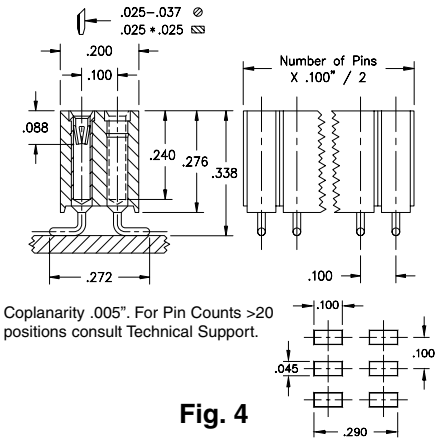


Coplanarity .005". For Pin Counts >20 positions consult Technical Support.

**Fig. 4**

## Ordering Information

### Fig. 1 — 800...001 Single Row Surface Mount Header

800-10-0_ _-30-001000

**Specify # of pins** → 03-64

### Fig. 2 — 802...001 Double Row Surface Mount Header

802-10-0_ _-30-001000

**Specify # of pins** → 04-72

*For Electrical, Mechanical & Enviromental Data, See pg. 4*

*For RoHS compliance select ◇ plating code.*

| PLATING CODE = | 10◇ | | | |
|---|---|---|---|---|
| Pin Plating | 10µ" Au | | | |

### Fig. 3 — 801...001 Single Row Surface Mount Socket

801-43-0 _ _-30-001000

**Specify # of pins** → 03-50

### Fig. 4 — 803...001 Double Row Surface Mount Socket

803-XX-_ _ _-30-001000

**Specify # of pins** → 004-100

*For Electrical, Mechanical & Enviromental Data, See pg. 4*

*XX=Plating Code See Below*

*For RoHS compliance select ◇ plating code.*

| SPECIFY PLATING CODE XX= | | | 93 | | | 43◇ | |
|---|---|---|---|---|---|---|---|
| Sleeve (Pin) | | | 200µ" Sn/Pb | | | 200µ"Sn | |
| Contact (Clip) | | | 30µ" Au | | | 30µ" Au | |

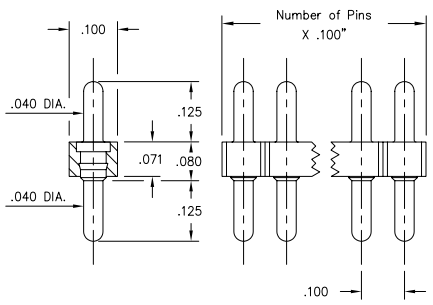


Fig. 1

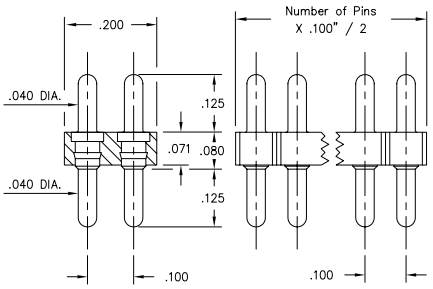


Fig. 2

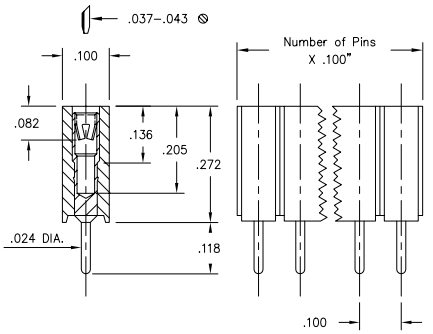


Fig. 3

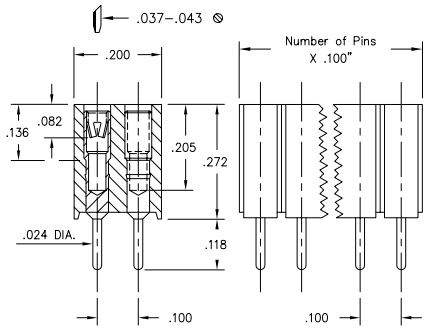


Fig. 4

- Series 800 and 802 single & double row interconnects feature sturdy .040" Dia. leads (MM #3077) and low profile (.071" thick) insulator. See page 182 for details.
- Series 801 and 803 single and double row sockets use MM #1313 receptacles. See page 151 for details.
- Series 801 and 803 receptacles use Hi-Rel, 6-finger BeCu #18 contacts rated at 8 amps. Receptacles accept .037"-.043" diameter pins. See page 222 for details.
- Insulators are high temp. thermoplastic.

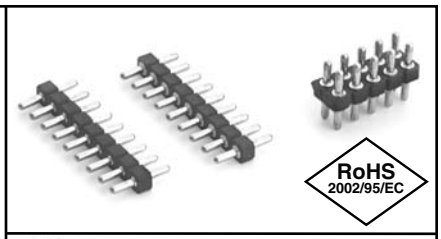


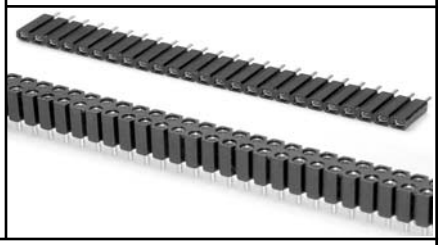

## Ordering Information

**Fig. 1** — **Series 800...10-004 Single Row Pin Header**

800-XX-0_ _-10-004000

**Specify # of pins** → 01-50

**Fig. 2** — **Series 802...10-004 Double Row Pin Header**

802-XX-_ _ _-10-004000

**Specify # of pins** → 04-100

*For Electrical, Mechanical & Enviromental Data, See pg. 4*

*XX=Plating Code See Below*

*For RoHS compliance select ◇ plating code.*

| SPECIFY PLATING CODE XX= | 10◇ | 90 | 40◇ | |
|---|---|---|---|---|
| Pin Plating | 10µ" Au | 200µ" Sn/Pb | 200µ" Sn | |

**Fig. 3** — **Series 801...10-004 Single Row Socket**

801-XX-0_ _-10-004000

**Specify # of pins** → 01-50

**Fig. 4** — **Series 803...10-004 Double Row Socket**

803-XX-_ _ _-10-004000

**Specify # of pins** → 004-100

*For Electrical, Mechanical & Enviromental Data, See pg. 4*

*XX=Plating Code See Below*

*For RoHS compliance select ◇ plating code.*

| SPECIFY PLATING CODE XX= | | | 93 | 99 | | 43◇ | |
|---|---|---|---|---|---|---|---|
| Sleeve (Pin) | | | 200µ" Sn/Pb | 200µ" Sn/Pb | | 200µ" Sn | |
| Contact (Clip) | | | 30µ" Au | 200µ" Sn/Pb | | 30µ" Au | |

# .100" Grid OFP® Pass Through Sockets for Ø.030" & □.025" pins
## Single and Double Row

- 834/835 Series Pass Through Sockets have a low .130" profile and will accept Ø.030" round pin, as well as industry standard .025" square pin headers.
- They are typically used to interconnect two or more parallel circuit boards.
- Sockets are designed for hand, wave or reflow* soldering. The high temp. insulator is compatible with all solder processes.
- Unique *ORGANIC FIBRE PLUG®* barriers prevent solder, paste or flux from contaminating the internal spring contacts. After soldering, the *OFP®* barriers are pushed out of the socket when the mating header is inserted.
- Mill-Max sockets use a precision-machined brass sleeve with a press-fit beryllium copper "multi-finger" spring contact.
- Recommended mounting holes are Ø.046 ±.003" PTH (1,2 mm drilled prior to plating).

**Intrusive reflow (also called "pin-in-paste") is a technique of using conventional through-hole components in a reflow soldering process. The pass through socket is placed into plated through-holes in the circuit board (solder paste has previously been screen printed on pads adjacent to the holes) and the board is reflowed in the same pass as other SMT components. Solder will fill the plated through-holes and achieve solder joints as reliable as wave soldering. The OFP® barrier prevents solder paste from being picked-up inside the contact during assembly.*

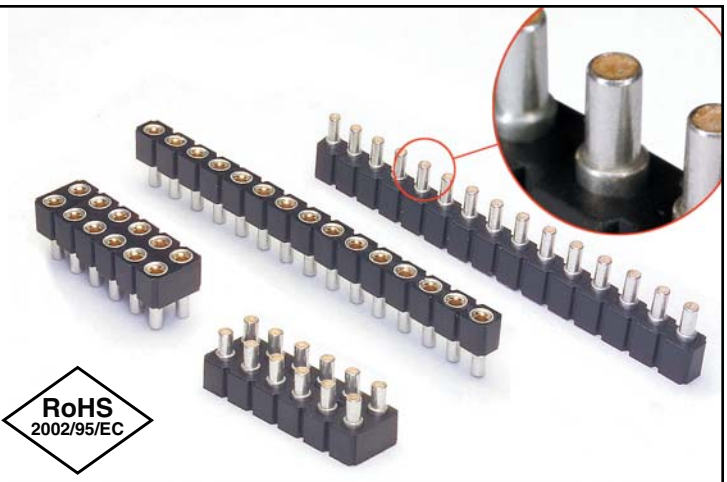


## Typical Application

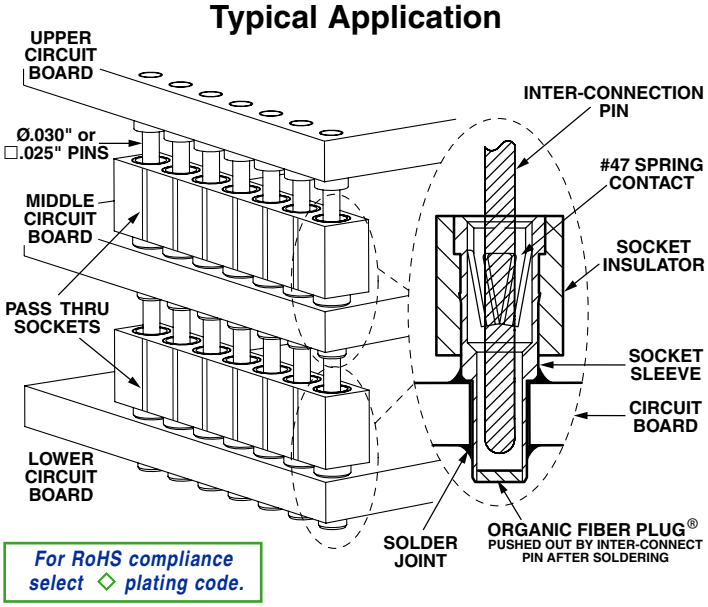


*For RoHS compliance select ◇ plating code.*

***US Patent #7,086,870***

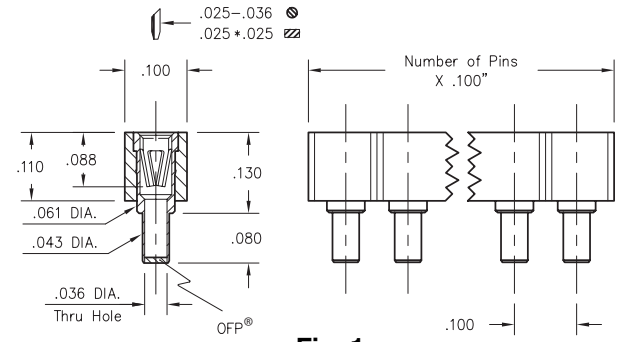


**Fig. 1**

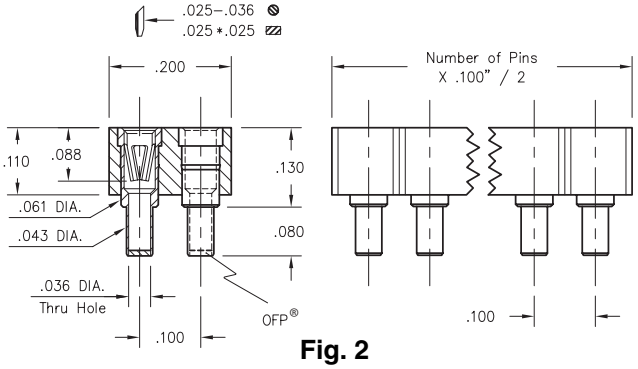


**Fig. 2**

## Ordering Information

| | | |
|---|---|---|
| **Fig. 1** | **Single Row OFP® Pass Through Socket** | |
| | 834-XX-0 _ _-10-001000 | |
| | **Specify # of pins** | → 01-64 |
| **Fig. 2** | **Double Row OFP® Pass Through Socket** | |
| | 835-XX-0 _ _-10-001000 | |
| | **Specify # of pins** | → 02-72 |

*For Electrical, Mechanical & Enviromental Data, See pg. 4*

*XX=Plating Code See Below*

| SPECIFY PLATING CODE XX= | | 93 | | 43◇ | |
|---|---|---|---|---|---|
| Sleeve (Pin) | | 200µ" Sn/Pb | | 200µ"Sn | |
| Contact (Clip) | | 30µ" Au | | 30µ" Au | |

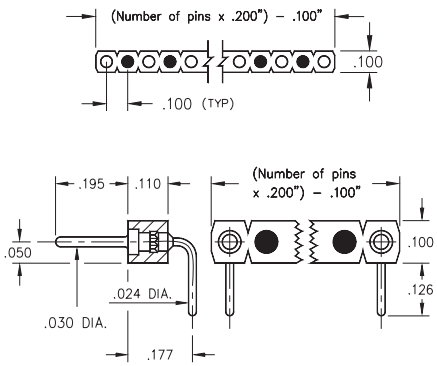


Fig. 1

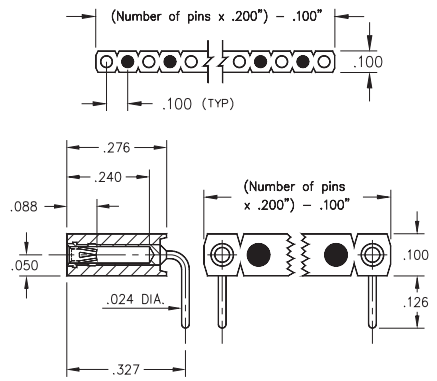


Fig. 2

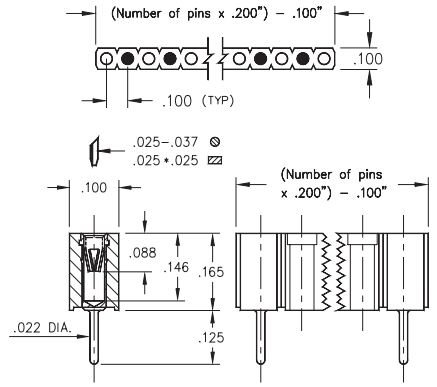


Fig. 3

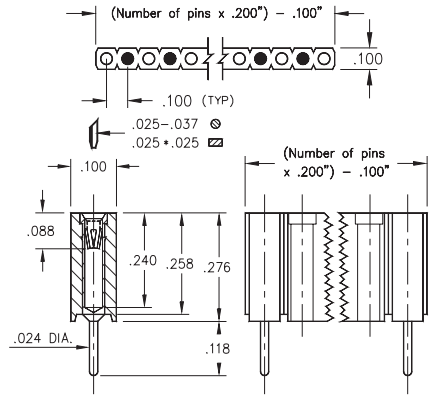


Fig. 4

- Series 800 selectively loaded headers use MM #5005 pins. See page 182 for details.
- Series 801 selectively loaded sockets use MM #1303, #1304 and #1305 pins. See pages 148, 149 & 150 for details.
- Series 801 selectively loaded sockets use Hi-Rel, 6-finger BeCu #47 contacts rated at 3 amps. See page 221 for details.
- Insulators are high temp. thermoplastic, suitable for all soldering operations.

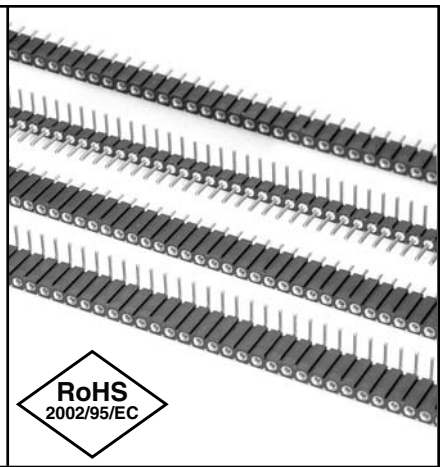


## Ordering Information

**Fig. 1** — **Series 800...20-201 — Right Angle Header**

800-10-0_ _-20-201000

**Specify # of pins** → 02-32

*For Electrical, Mechanical & Enviromental Data, See pg. 4*

*For RoHS compliance select ◇ plating code.*

| | | | | |
|---|---|---|---|---|
| PLATING CODE = | 10◇ | | | |
| Pin Plating | 10µ" Au | | | |

**Fig. 2** — **Series 801...20-201 — Right Angle Socket**

801-43-0_ _-20-201000

**Specify # of pins** → 02-25

**Fig. 3** — **Series 801...20-212 — Straight Socket**

801-43-0_ _-10-212000

**Specify # of pins** → 02-18

**Fig. 4** — **Series 801...10-201 — Straight Socket**

801-43-0_ _-10-201000

**Specify # of pins** → 02-25

*For Electrical, Mechanical & Enviromental Data, See pg. 4*

*For RoHS compliance select ◇ plating code.*

| | | | | | | | |
|---|---|---|---|---|---|---|---|
| PLATING CODE = | | | | | | 43◇ | |
| Sleeve (Pin) | | | | | | 200µ"Sn | |
| Contact (Clip) | | | | | | 30µ" Au | |

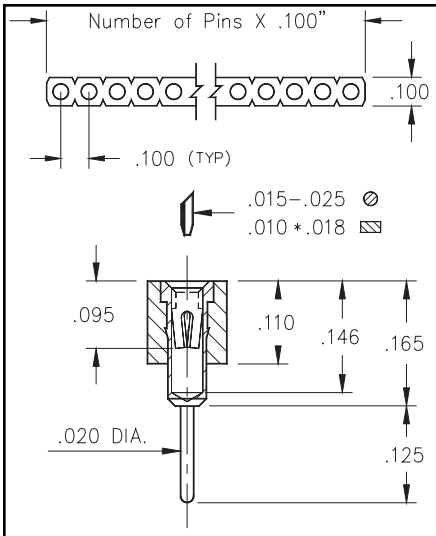


Fig. 1

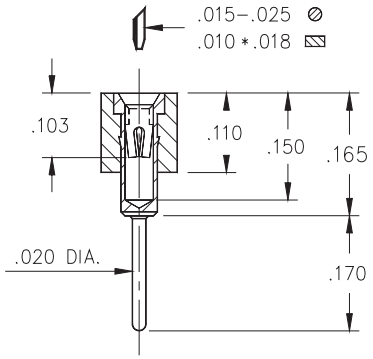


Fig. 2

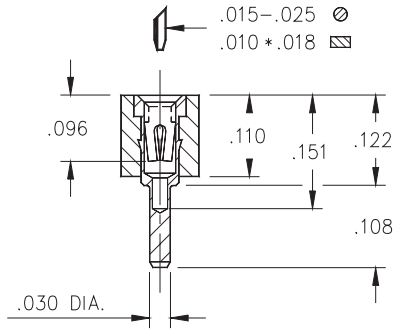


Fig. 3

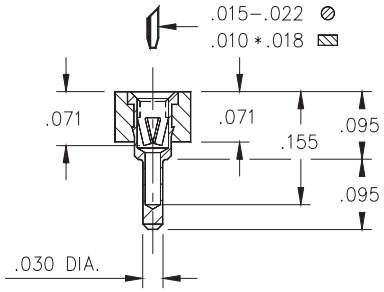


Fig. 4

- SIP sockets accept .015 - .025" diameter pins and standard IC leads.
- Various solder tails available: standard length, long for multi-layer boards, very low and ultra low profile. See Mill-Max #1001, 0134, 0501 or 1534 pins (See pages 132, 133, 136) for details.
- Hi-Rel, 4-finger BeCu #12 & #30 contacts are rated at 3 amps. See pages 218 for details.
- Insulators are high temp. thermoplastic.

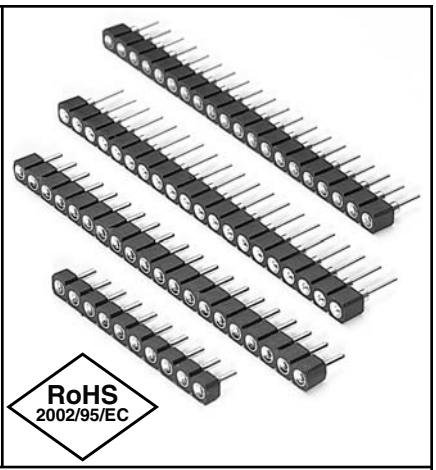


## Ordering Information

| | | |
|---|---|---|
| **Fig. 1** | **Series 310...001** | **Standard Solder Tail** |
| | 310-XX-1_ _-41-001000 | |
| | **Specify # of pins** → 01-64 | |
| **Fig. 2** | **Series 311...001** | **Long Solder Tail** |
| | ★ 41 & 91 Platings Non-Standard 311-XX-1_ _-41-001000 | |
| | **Specify # of pins** → 01-64 | |
| **Fig. 3** | **Series 315...001** | **Very Low Profile** |
| | ★ 41 & 91 Platings Non-Standard 315-XX-1_ _-41-001000 | |
| | **Specify # of pins** → 01-64 | |
| **Fig. 4** | **Series 315...003** | **Ultra Low Profile** |
| | ★ 41 & 91 Platings Non-Standard 315-XX-1_ _-41-003000 | |
| | **Specify # of pins** → 01-64 | |

*For Electrical, Mechanical & Enviromental Data, See pg. 4*

*XX=Plating Code See Below*

*For RoHS compliance select ◇ plating code.*

| SPECIFY PLATING CODE XX= | 13◇ | 91 | 93 | 99 | 41◇ | 43◇ | 44◇ |
|---|---|---|---|---|---|---|---|
| Sleeve (Pin) | 10µ" Au | 200µ" Sn/Pb | 200µ" Sn/Pb | 200µ"Sn/Pb | 200µ"Sn | 200µ"Sn | 200µ"Sn |
| Contact (Clip) | 30µ" Au | 10µ" Au | 30µ" Au | 200µ"Sn/Pb | 10µ" Au | 30µ" Au | 200µ"Sn |

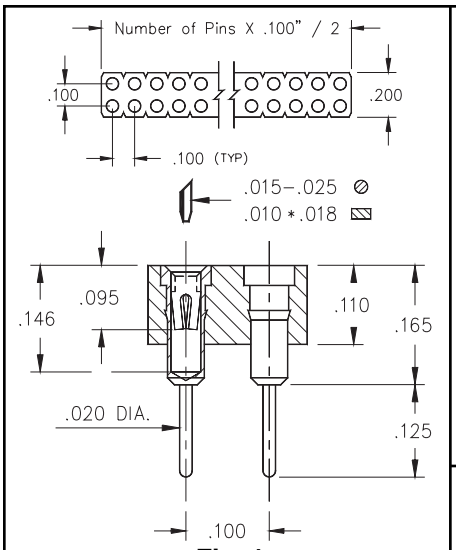


Fig. 1

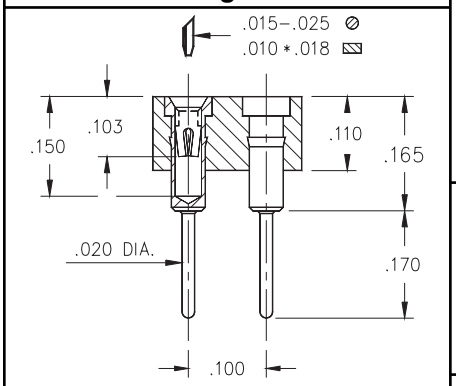


Fig. 2

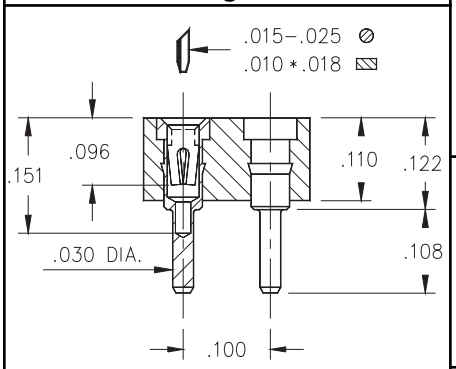


Fig. 3

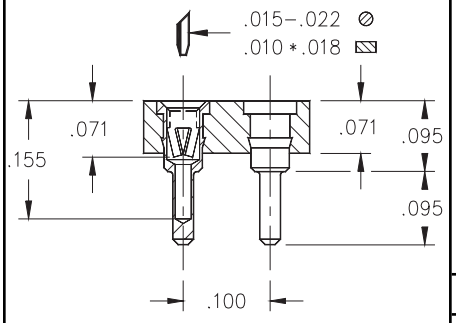


Fig. 4

- Series 41X double row strip sockets are on .100" grid.
- Various solder tails available: standard length, long for multi-layer boards, very low and ultra low profile. Using Mill-Max #1001, 0134, 0501 or 1534 pins (See pages 132, 133, 136) for details.
- Hi-Rel, 4-finger BeCu #12 & #30 contacts are rated at 3 amps. See page 218 for details.
- Insulators are high temp. thermoplastic.

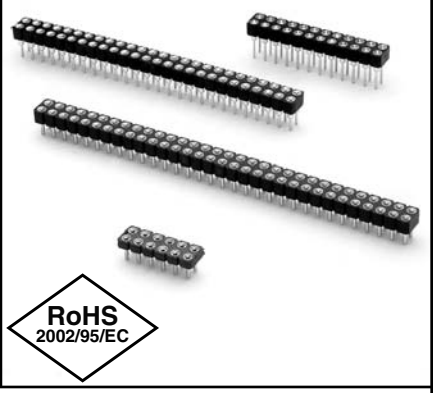


## Ordering Information

| | | |
|---|---|---|
| **Fig. 1** | **Series 410...001** | **Standard Solder Tail** |
| | 410-XX-2_ _-41-001000 | |
| | **Specify # of pins** → | 02-64 |
| **Fig. 2** | **Series 411...001** | **Long Solder Tail** |
| | 411-13-2_ _-41-001000 | |
| | **Specify # of pins** → | 02-64 |
| **Fig. 3** | **Series 415...001** | **Very Low Profile** |
| | 415-XX-2_ _-41-001000 | |
| | **Specify # of pins** → | 02-64 |
| **Fig. 4** | **Series 415...003** | **Ultra Low Profile** |
| | 415-XX-2_ _-41-003000 | |
| | **Specify # of pins** → | 02-72 |

*For Electrical, Mechanical & Enviromental Data, See pg. 4*

*XX=Plating Code See Below*

*For RoHS compliance select ◇ plating code.*

| SPECIFY PLATING CODE XX= | 13◇ | | 93 | | | 43◇ | |
|---|---|---|---|---|---|---|---|
| Sleeve (Pin) | 10µ" Au | | 200µ" Sn/Pb | | | 200µ"Sn | |
| Contact (Clip) | 30µ" Au | | 30µ" Au | | | 30µ" Au | |

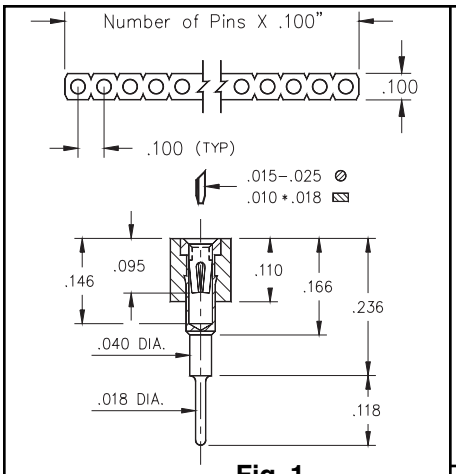


Fig. 1

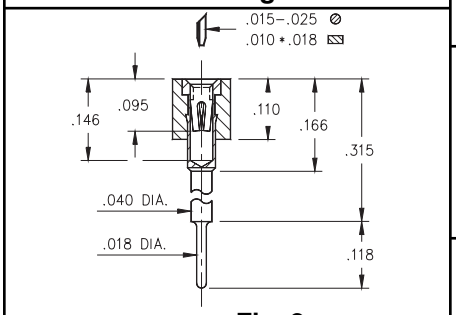


Fig. 2

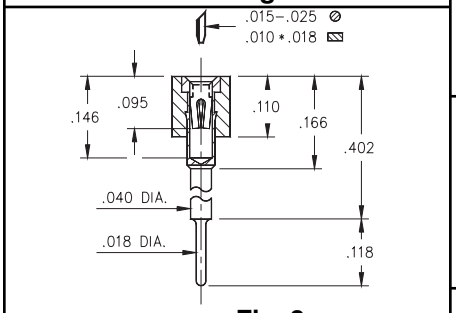


Fig. 3

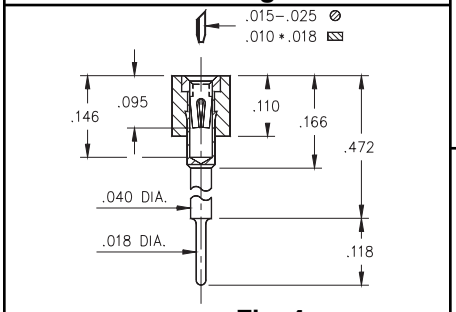


Fig. 4

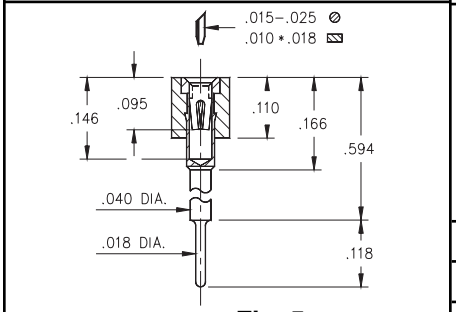


Fig. 5

- Elevated socket strips are available in 5 different heights:

  316...006 uses pin # 0153-1
  316...003 uses pin # 0153-2
  316...007 uses pin # 0153-3
  316...008 uses pin # 0153-4
  316...001 uses pin # 0153-5
  See page 138 for details.

- Hi-Rel, 4-finger BeCu #30 contact is rated at 3 amps. See page 218 for details.

- Insulators are high temp. thermoplastic.

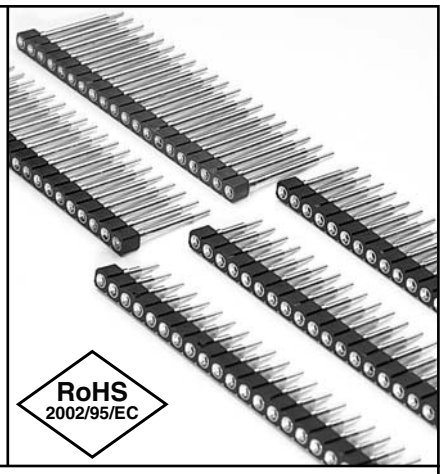


## Ordering Information

| | | |
|---|---|---|
| **Fig. 1** | **Series 316...006** | **Standoff Height = .236** |
| | 316-XX-1_ _-41-006000 | |
| | **Specify # of pins** → | 01-64 |
| **Fig. 2** | **Series 316...003** | **Standoff Height = .315** |
| | 316-XX-1_ _-41-003000 | |
| | **Specify # of pins** → | 01-64 |
| **Fig. 3** | **Series 316...007** | **Standoff Height = .402** |
| | 316-XX-1_ _-41-007000 | |
| | **Specify # of pins** → | 01-64 |
| **Fig. 4** | **Series 316...008** | **Standoff Height = .472** |
| | 316-XX-1_ _-41-008000 | |
| | **Specify # of pins** → | 01-64 |
| **Fig. 5** | **Series 316...001** | **Standoff Height = .594** |
| | 316-XX-1_ _-41-001000 | |
| | **Specify # of pins** → | 01-64 |

*For Electrical, Mechanical & Enviromental Data, See pg. 4*

*XX=Plating Code See Below*

*For RoHS compliance select ◇ plating code.*

| SPECIFY PLATING CODE XX= | | | 93 | | | 43◇ | |
|---|---|---|---|---|---|---|---|
| Sleeve (Pin) | | | 200µ" Sn/Pb | | | 200µ"Sn | |
| Contact (Clip) | | | 30µ" Au | | | 30µ" Au | |

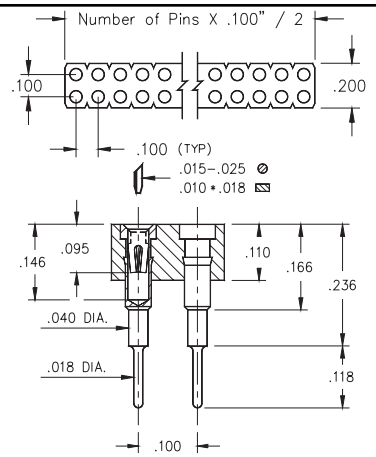


Fig. 1

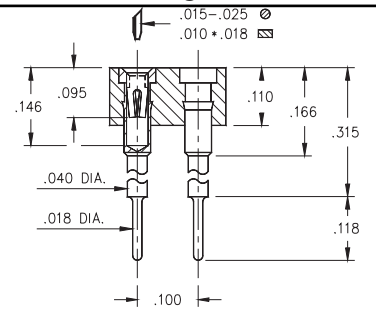


Fig. 2

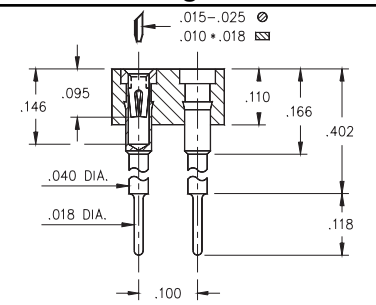


Fig. 3

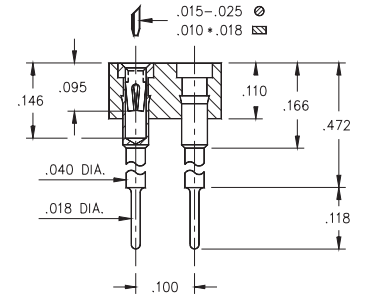


Fig. 4

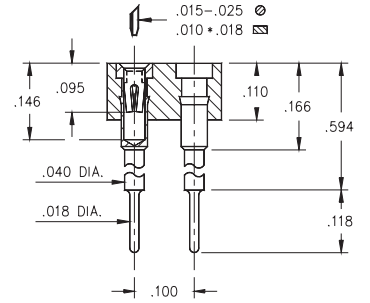


Fig. 5

- Elevated socket strips are available in 5 different standoff heights:

  416...006 uses pin # 0153-1
  416...003 uses pin # 0153-2
  416...007 uses pin # 0153-3
  416...008 uses pin # 0153-4
  416...001 uses pin # 0153-5
  See page 138 for details.

- Hi-Rel, 4-finger BeCu #30 contact is rated at 3 amps. See page 218 for details.

- Insulators are high temp. thermoplastic.

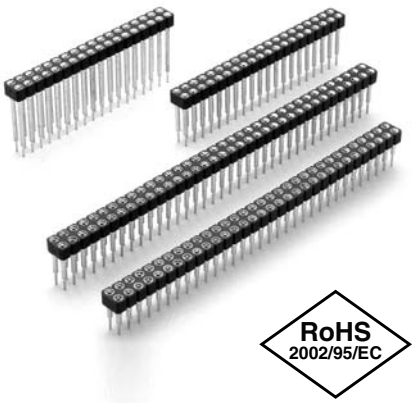


## Ordering Information

| | | |
|---|---|---|
| **Fig. 1** | **Series 416...006** | **Standoff Height = .236"** |
| | 416-XX-2_ _-41-006000 | |
| | **Specify # of pins** → | 02-64 |
| **Fig. 2** | **Series 416...003** | **Standoff Height = .315"** |
| | 416-XX-2_ _-41-003000 | |
| | **Specify # of pins** → | 02-64 |
| **Fig. 3** | **Series 416...007** | **Standoff Height = .402"** |
| | 416-XX-2_ _-41-007000 | |
| | **Specify # of pins** → | 02-64 |
| **Fig. 4** | **Series 416...008** | **Standoff Height = .472"** |
| | 416-XX-2_ _-41-008000 | |
| | **Specify # of pins** → | 02-64 |
| **Fig. 5** | **Series 416...001** | **Standoff Height = .594"** |
| | 416-XX-2_ _-41-001000 | |
| | **Specify # of pins** → | 02-64 |

*For Electrical, Mechanical & Enviromental Data, See pg. 4*

*XX=Plating Code See Below*

*For RoHS compliance select ◇ plating code.*

| SPECIFY PLATING CODE XX= | | | 93 | | | 43◇ | |
|---|---|---|---|---|---|---|---|
| Sleeve (Pin) | | | 200µ" Sn/Pb | | | 200µ"Sn | |
| Contact (Clip) | | | 30µ" Au | | | 30µ" Au | |

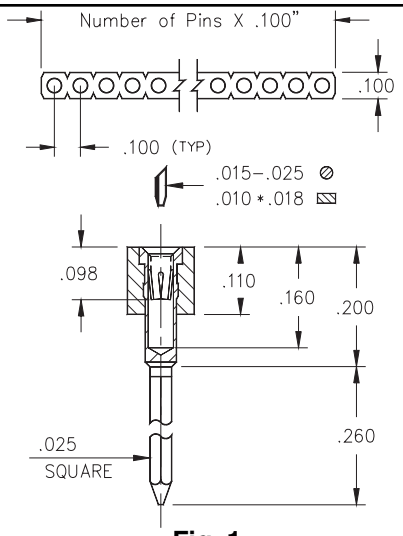


Fig. 1

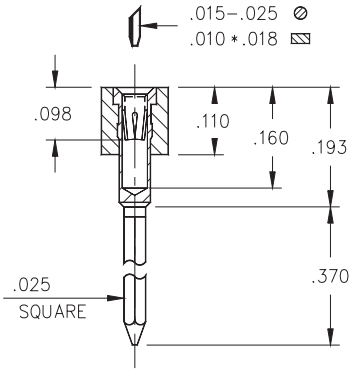


Fig. 2

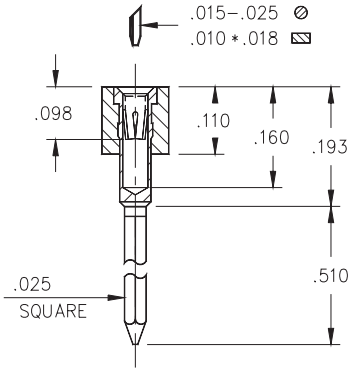


Fig. 3

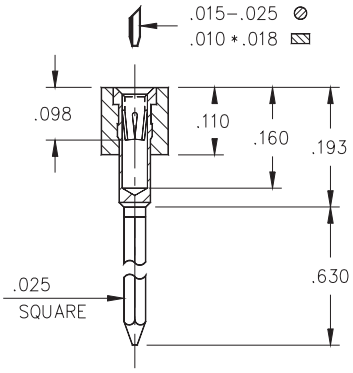


Fig. 4

- Wraposts available in 1 - 4 levels using MM pin numbers:

  1-Level uses pin # 0040-1
  2-Level uses pin # 0089-2
  3-Level uses pin # 0088-3
  4-Level uses pin # 0086-4
  See page 166 for details.

- Hi-Rel, 4-finger BeCu #30 contact is rated at 3 amps. See page 218 for details.

- Insulators are high temp. thermoplastic.

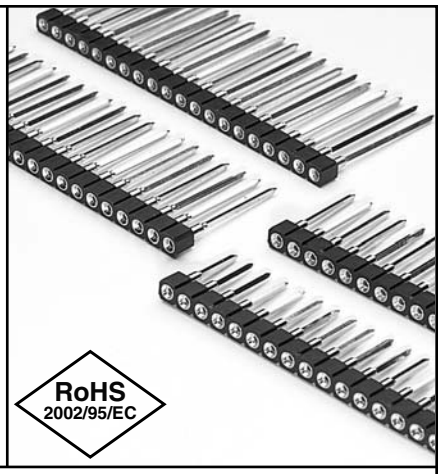


## Ordering Information

| | | |
|---|---|---|
| **Fig. 1** | **Series 321...001** | **1 Level Wrapost** |
| | 321-13-1_ _-41-001000 | |
| | **Specify # of pins** → | 01-64 |
| **Fig. 2** | **Series 322...001** | **2 Level Wrapost** |
| | 322-XX-1_ _-41-001000 | |
| | **Specify # of pins** → | 01-64 |
| **Fig. 3** | **Series 323...001** | **3 Level Wrapost** |
| | 323-XX-1_ _-41-001000 | |
| | **Specify # of pins** → | 01-64 |
| **Fig. 4** | **Series 324...002** | **4 Level Wrapost** |
| | 324-XX-1_ _-41-002000 | |
| | **Specify # of pins** → | 01-64 |

*For Electrical, Mechanical & Enviromental Data, See pg. 4*

*XX=Plating Code See Below*

*For RoHS compliance select ◇ plating code.*

| SPECIFY PLATING CODE XX= | 13◇ | | 93 | | | 43◇ | |
|---|---|---|---|---|---|---|---|
| Sleeve (Pin) | 10µ" Au | | 200µ" Sn/Pb | | | 200µ"Sn | |
| Contact (Clip) | 30µ" Au | | 30µ" Au | | | 30µ" Au | |

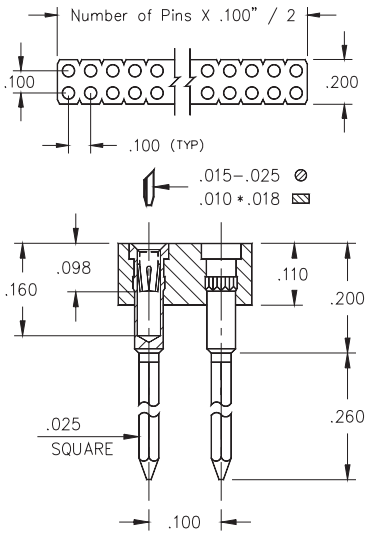


Fig. 1

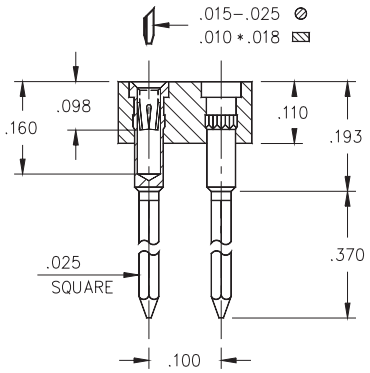


Fig. 2

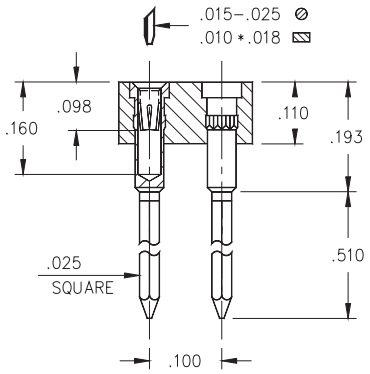


Fig. 3

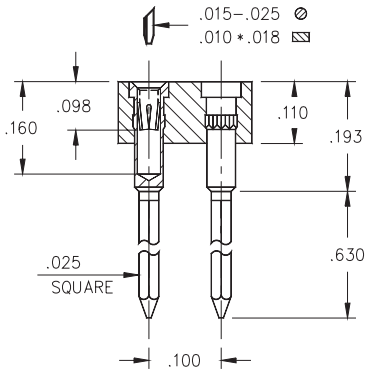


Fig. 4

- Wrapost double row strip sockets are available with 1 - 4 level wraposts:

  1-Level uses pin # 0040-1
  2-Level uses pin # 0089-2
  3-Level uses pin # 0088-3
  4-Level uses pin # 0086-4
  See page 166 for details.

- Hi-Rel, 4-finger BeCu #30 contact is rated at 3 amps. See page 218 for details.

- Insulators are high temp. thermoplastic.


## Ordering Information

| | | |
|---|---|---|
| **Fig. 1** | **Series 421...001** | **1 Level Wrapost** |
| | 421-XX-2_ _-41-001000<br>**Specify # of pins** → 02-64 | |
| **Fig. 2** | **Series 422...001** | **2 Level Wrapost** |
| | 422-XX-2_ _-41-001000<br>**Specify # of pins** → 02-64 | |
| **Fig. 3** | **Series 423...001** | **3 Level Wrapost** |
| | 423-XX-2_ _-41-001000<br>**Specify # of pins** → 02-64 | |
| **Fig. 4** | **Series 424...002** | **4 Level Wrapost** |
| | 424-XX-2_ _-41-002000<br>**Specify # of pins** → 02-64 | |

*For Electrical, Mechanical & Enviromental Data, See pg. 4*

*XX=Plating Code See Below*

*For RoHS compliance select ◇ plating code.*

| SPECIFY PLATING CODE XX= | 13◇ | | 93 | | | 43◇ | |
|---|---|---|---|---|---|---|---|
| Sleeve (Pin) | 10µ" Au | | 200µ" Sn/Pb | | | 200µ"Sn | |
| Contact (Clip) | 30µ" Au | | 30µ" Au | | | 30µ" Au | |

# SINGLE-IN-LINE SOCKETS
## .100" Grid Wrapost with Solder Tail
## Single Row

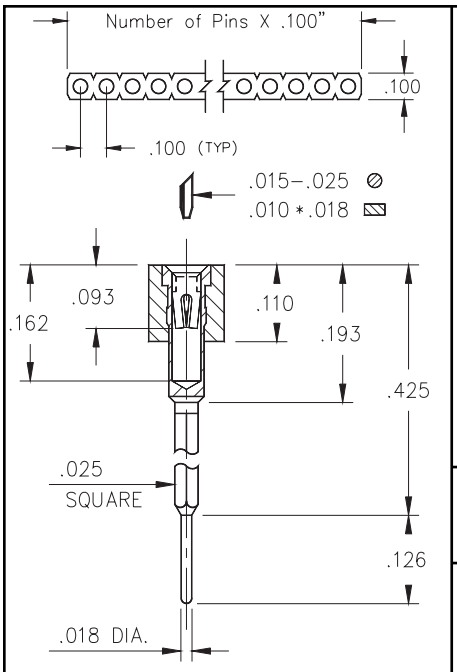


Fig. 1

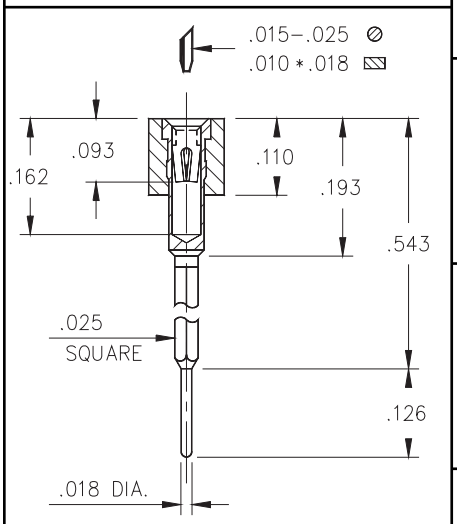


Fig. 2

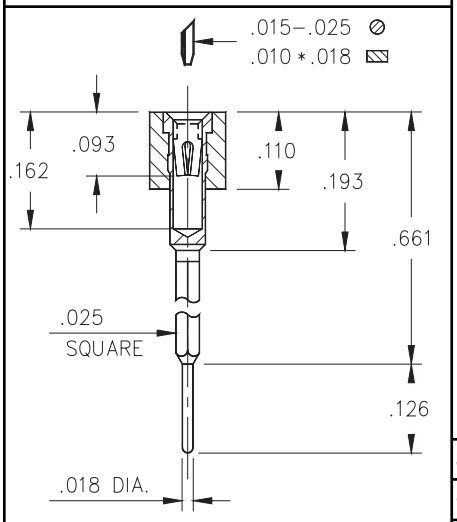


Fig. 3

- Wrapost / Solder tail combinations are available in 3 lengths using MM pin numbers:

  326...001 uses pin # 2601
  326...002 uses pin # 2602
  326...003 uses pin # 2603
  See page 167 for details.

- Hi-Rel, 4-finger BeCu #30 contact is rated at 3 amps. See page 218 for details.

- Insulators are high temp. thermoplastic.


## Ordering Information

| | |
|---|---|
| **Fig. 1** | **Series 326...001** |
| | 326-XX-1_ _-41-001000 |
| | **Specify # of pins** → 01-64 |
| **Fig. 2** | **Series 326...002** |
| | 326-XX-1_ _-41-002000 |
| | **Specify # of pins** → 01-64 |
| **Fig. 3** | **Series 326...003** |
| | 326-XX-1_ _-41-003000 |
| | **Specify # of pins** → 01-64 |

*For Electrical, Mechanical & Enviromental Data, See pg. 4*

*XX=Plating Code See Below*

*For RoHS compliance select ◇ plating code.*

| SPECIFY PLATING CODE XX= | | | 93 | | | 43◇ | |
|---|---|---|---|---|---|---|---|
| Sleeve (Pin) | | | 200µ" Sn/Pb | | | 200µ"Sn | |
| Contact (Clip) | | | 30µ" Au | | | 30µ" Au | |

# SINGLE-IN-LINE SOCKETS
## .100" Grid Wrapost with Solder Tail
## Double Row

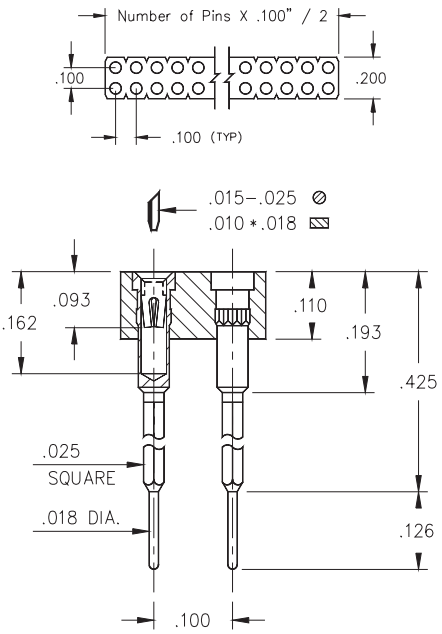


Fig. 1

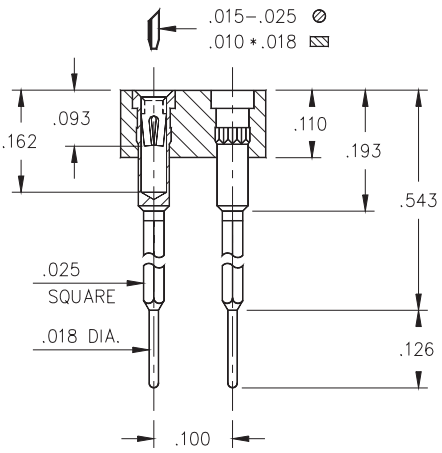


Fig. 2

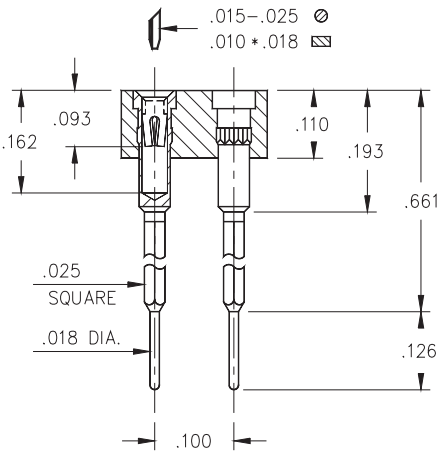


Fig. 3

- Wrapost / Solder tail combination for interconnect purposes are available in 3 lengths using pin numbers:

  426...001 uses pin # 2601
  426...002 uses pin # 2602
  426...003 uses pin # 2603
  See page 167 for details.

- Hi-Rel, 4-finger BeCu #30 contact is rated at 3 amps. See page 218 for details.

- Insulators are high temp. thermoplastic.


## Ordering Information

| | | |
|---|---|---|
| **Fig. 1** | **Series 426...001** | **1 Level Wrapost** |
| | 426-XX-2_ _-41-001000 | |
| | **Specify # of pins** → | 02-64 |
| **Fig. 2** | **Series 426...002** | **2 Level Wrapost** |
| | 426-XX-2_ _-41-002000 | |
| | **Specify # of pins** → | 02-64 |
| **Fig. 3** | **Series 426...003** | **3 Level Wrapost** |
| | 426-XX-2_ _-41-003000 | |
| | **Specify # of pins** → | 02-64 |

*For Electrical, Mechanical & Enviromental Data, See pg. 4*

*XX=Plating Code See Below*

*For RoHS compliance select ◇ plating code.*

| SPECIFY PLATING CODE XX= | 13◇ | | 93 | | | 43◇ | |
|---|---|---|---|---|---|---|---|
| Sleeve (Pin) | 10µ" Au | | 200µ" Sn/Pb | | | 200µ"Sn | |
| Contact (Clip) | 30µ" Au | | 30µ" Au | | | 30µ" Au | |

# SINGLE-IN-LINE SOCKETS
## .100" Grid Solderless Press-Fit
## Single Row

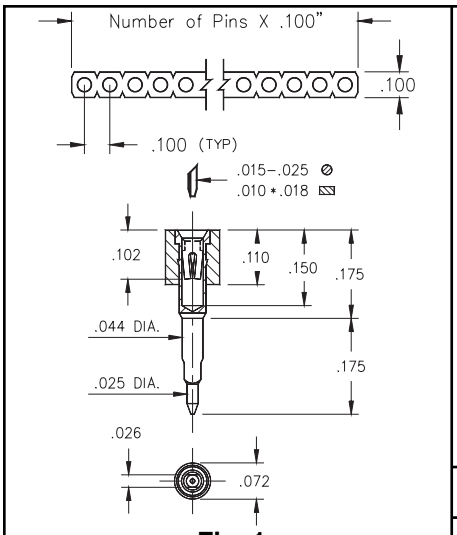


Fig. 1

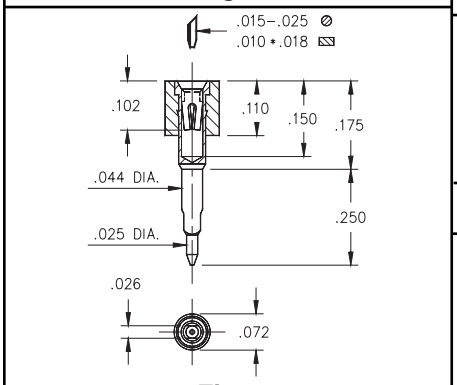


Fig. 2

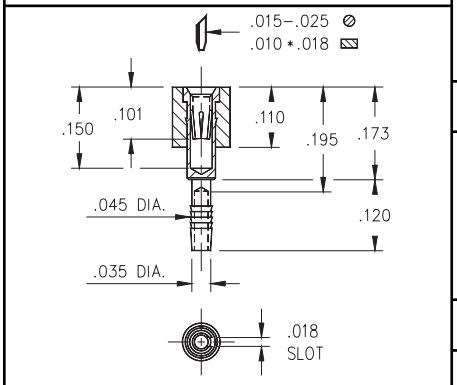


Fig. 3

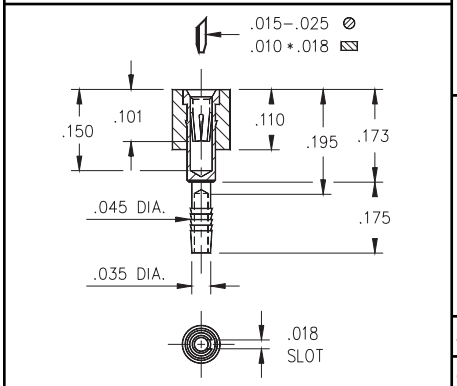


Fig. 4

- Unique compliant tail pins conform to the plated through-hole without stressing the inner layers of a multilayer board.
- Recommended plated through-hole for 304 series: .036"-.041" use a 1.1mm drill prior to plating. Using MM #0477 & #0478 pins, see page 133 for details.
- For 346 series: .040"±.003" finished plated through-hole. Using MM #4612 & #4613 pins, see page 133 for details. Patent No. 4,799,904.
- Hi-Rel, 4 finger BeCu #30 contact is rated at 3 amps. See page 218 for details.
- Insulators are high temp. thermoplastic.


## Ordering Information

**Series 304...770 SOLDERLESS PRESS-FIT**

| | |
|---|---|
| **Fig. 1** | (For .062" Thick Boards)<br>304-13-1_ _-41-770000<br>**Specify # of pins** → 01-64 |

**Series 304...780 SOLDERLESS PRESS-FIT**

| | |
|---|---|
| **Fig. 2** | (For .125" Thick Boards)<br>304-13-1_ _-41-780000<br>**Specify # of pins** → 01-64 |

Mill-Max recommends plating Code 13 for Series 304...770 and 304...780

**Series 346...012 COMPLIANT SOLDERLESS PRESS-FIT**

| | |
|---|---|
| **Fig. 3** | (For .060-.100" Thick Boards)<br>346-XX-1_ _-41-012000<br>**Specify # of pins** → 01-64 |

**Series 346...013 COMPLIANT SOLDERLESS PRESS-FIT**

| | |
|---|---|
| **Fig. 4** | (For .090-.130" Thick Boards)<br>346-XX-1_ _-41-013000<br>**Specify # of pins** → 01-64 |

*For Electrical, Mechanical & Enviromental Data, See pg. 4*

*XX=Plating Code See Below*

*For RoHS compliance select ◇ plating code.*

| SPECIFY PLATING CODE XX= | 13◇ | | 93 | 99 | | 43◇ | 44◇ |
|---|---|---|---|---|---|---|---|
| Sleeve (Pin) | 10µ" Au | | 200µ" Sn/Pb | 200µ"Sn/Pb | | 200µ"Sn | 200µ"Sn |
| Contact (Clip) | 30µ" Au | | 30µ" Au | 200µ"Sn/Pb | | 30µ" Au | 200µ"Sn |

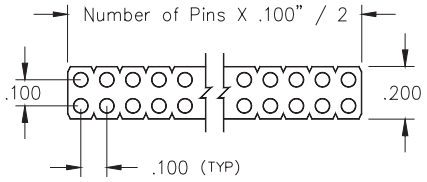


- Compliant tail solderless press-fit: MM #4612 or #4613 pins. Use series 446...012 for .060"-.120" thick boards, and series 446...013 for .090"-.130" thick boards. See Page 133 for details.
- Compliant tail receptacles can be inserted and removed without any degradation of the plated through-hole.
- Hi-Rel, 4 finger BeCu #30 contact is rated at 3 amps. See page 218 for details.
- Insulators are high temp. thermoplastic.

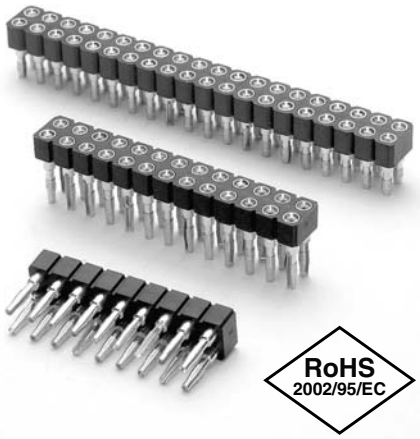


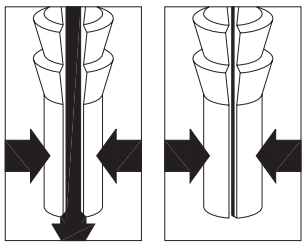

APPLICATION OF COMPLIANT TAIL PINS

Mill-Max's patented* compliant tail features precision-machined pins that are hollow and slotted to conform to a .040" ± .003" diameter PTH. As the pin is inserted, the slot compresses to fit the PTH, thus avoiding damage (see illustration at left). The pin's tail has fine serrations that form a perfect "gas tight" connection that doesn't require soldering. And since the pin doesn't damage the hole, compliant tail sockets and connectors can be easily replaced.
*Patent No. 4,799,904.

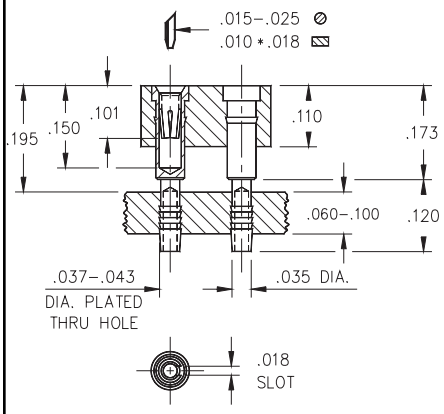


Fig. 1

## Ordering Information

| | |
|---|---|
| **Fig. 1** | **Series 446...012**<br>446-XX-2_ _-41-012000<br>**Specify # of pins** → 02-64 |
| **Fig. 2** | **Series 446...013**<br>446-XX-2_ _-41-013000<br>**Specify # of pins** → 02-64 |

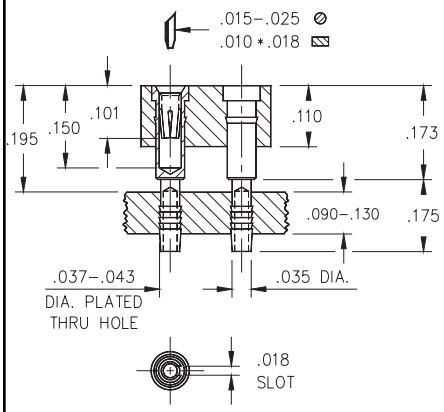


Fig. 2

*For Electrical, Mechanical & Enviromental Data, See pg. 4*

*XX=Plating Code See Below*

*For RoHS compliance select ◇ plating code.*

| SPECIFY PLATING CODE XX= | 13◇ | | 93 | 99 | | 43◇ | 44◇ |
|---|---|---|---|---|---|---|---|
| Sleeve (Pin) | 10µ" Au | | 200µ" Sn/Pb | 200µ" Sn/Pb | | 200µ" Sn | 200µ" Sn |
| Contact (Clip) | 30µ" Au | | 30µ" Au | 200µ" Sn/Pb | | 30µ" Au | 200µ" Sn |

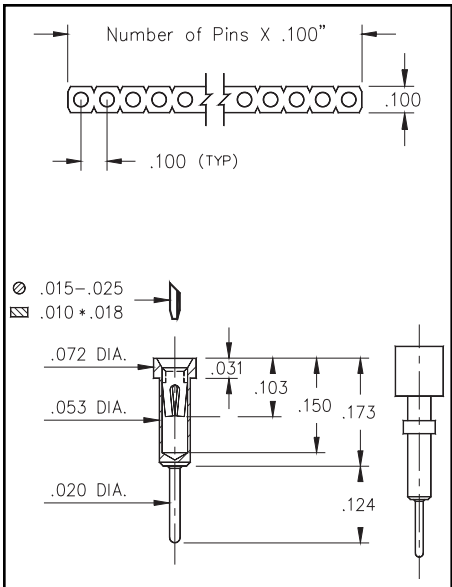


Fig. 1

- Standard solder tail receptacles can be mounted as a low profile receptacle or by the solder tail for use in smaller diameter holes.
- Series 712 uses MM #0255 pins. See page 136 for details.
- Hi-Rel, 4-finger BeCu #30 contact is rated at 3 amps. See page 218 for details.
- Insulators are high temp. thermoplastic.

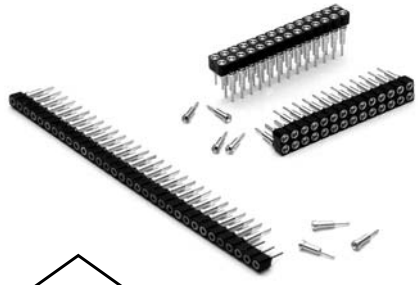

RoHS 2002/95/EC

## Ordering Information

| | |
|---|---|
| Fig. 1 | **Single Row (.028 or .055 min. mounting holes)**<br>712-XX-1_ _-41-001000<br>**Specify # of pins** → 01-64 |
| Fig. 2 | **Double Row (.028 or .055 min. mounting holes)**<br>712-XX-2_ _-41-001000<br>**Specify # of pins** → 02-64 |

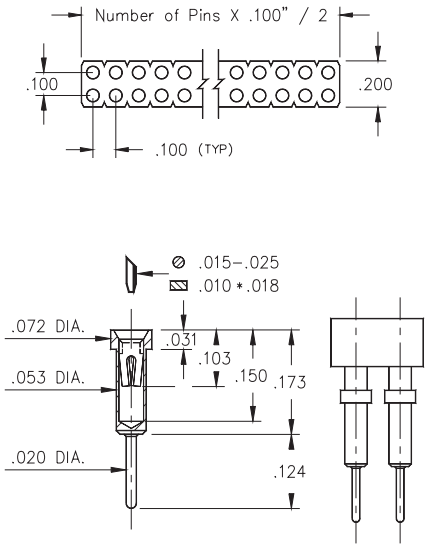


Fig. 2

*For Electrical, Mechanical & Enviromental Data, See pg. 4*

*XX=Plating Code See Below*

*For RoHS compliance select ◇ plating code.*

| SPECIFY PLATING CODE XX= | 13◇ | | 93 | | | 43◇ | |
|---|---|---|---|---|---|---|---|
| Sleeve (Pin) | 10µ" Au | | 200µ" Sn/Pb | | | 200µ"Sn | |
| Contact (Clip) | 30µ" Au | | 30µ" Au | | | 30µ" Au | |

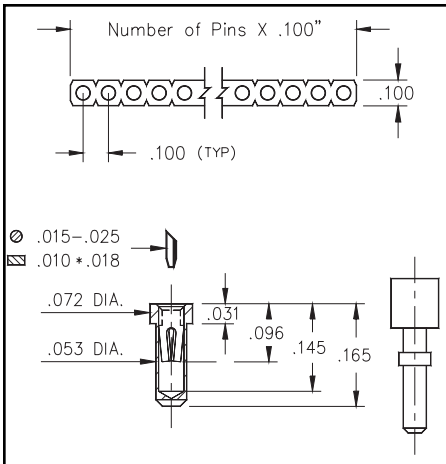


Fig. 1

- Low profile receptacles sit .031" above the board.
- Series 714 uses MM #1401 & MM # 1407 pin receptacles. See pages 128 and 141 for details.
- Hi-Rel, 4-finger BeCu #30 contact is used in the #1401 receptacle and a BeCu #11 contact is used in the #1407. Both contacts are rated at 3 amps. See pages 217 & 218 for details.
- Insulators are high temp. thermoplastic.

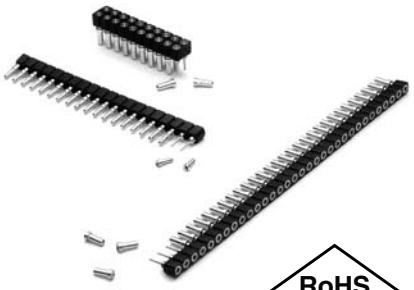

RoHS 2002/95/EC

## Ordering Information

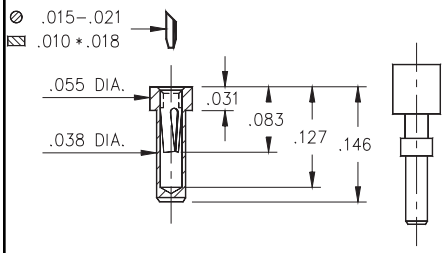


Fig. 2

| | |
|---|---|
| **Fig. 1** | **Single Row (.055 min. mounting hole)**<br>714-XX-1_ _-41-001000<br>**Specify # of pins** → 01-64 |
| **Fig. 2** | **Single Row (.039 min. mounting hole)**<br>714-XX-1_ _-31-007000<br>**Specify # of pins** → 01-64 |
| **Fig. 3** | **Double Row (.055 min. mounting hole)**<br>714-XX-2_ _-41-001000<br>**Specify # of pins** → 02-64 |
| **Fig. 4** | **Double Row (.039 min. mounting hole)**<br>714-XX-2_ _-31-007000<br>**Specify # of pins** → 02-64 |

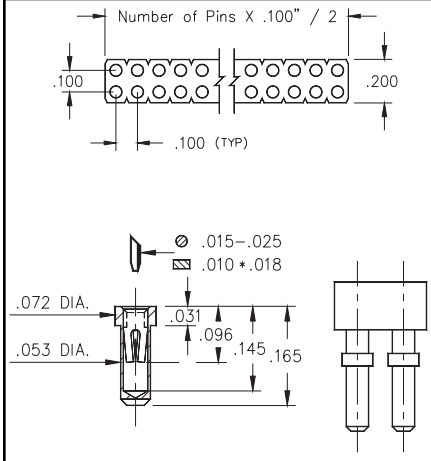


Fig. 3

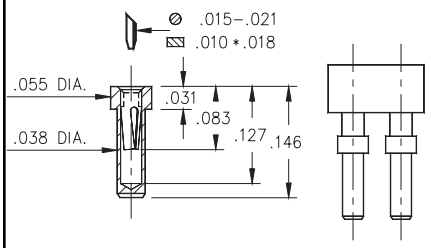


Fig. 4

*For Electrical, Mechanical & Enviromental Data, See pg. 4*

*XX=Plating Code See Below*

*For RoHS compliance select ◇ plating code.*

| SPECIFY PLATING CODE XX= | | | 93 | | | 43◇ | |
|---|---|---|---|---|---|---|---|
| Sleeve (Pin) | | | 200µ" Sn/Pb | | | 200µ"Sn | |
| Contact (Clip) | | | 30µ" Au | | | 30µ" Au | |

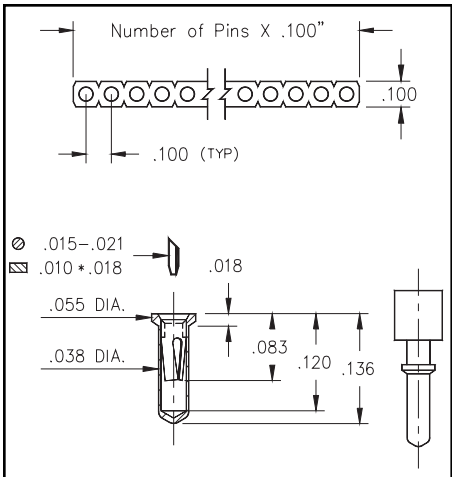


Fig. 1

- Ultra low profile receptacles sit .018" above the board.
- Series 714 uses MM #0552-1 and MM #0552-2 pin receptacles. See page 129 for details.
- Hi-Rel, 3-finger BeCu #11 contact is rated at 3 amps. See page 217 for details.
- Insulators are high temp. thermoplastic.

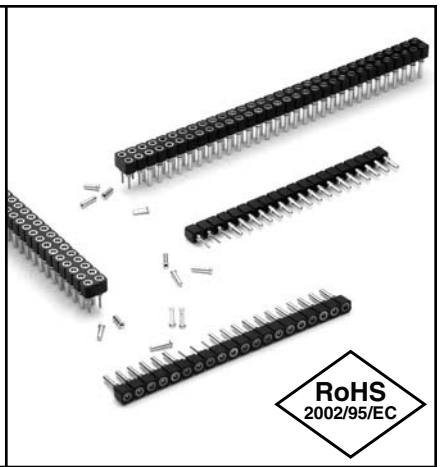


## Ordering Information

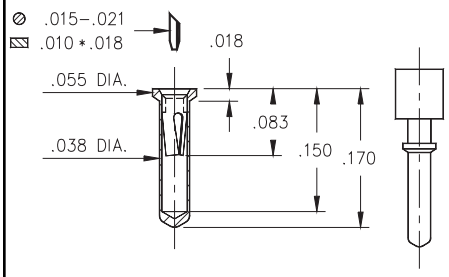


Fig. 2

| | |
|---|---|
| **Fig. 1** | **Single Row (.039 min. mounting hole)** |
| | 714-XX-1_ _-31-012000 |
| | **Specify # of pins** → 01-64 |
| **Fig. 2** | **Single Row (.039 min. mounting hole)** |
| | 714-XX-1_ _-31-018000 |
| | **Specify # of pins** → 01-64 |
| **Fig. 3** | **Double Row (.039 min. mounting hole)** |
| | 714-XX-2_ _-31-012000 |
| | **Specify # of pins** → 02-64 |
| **Fig. 4** | **Double Row (.039 min. mounting hole)** |
| | 714-XX-2_ _-31-018000 |
| | **Specify # of pins** → 02-64 |

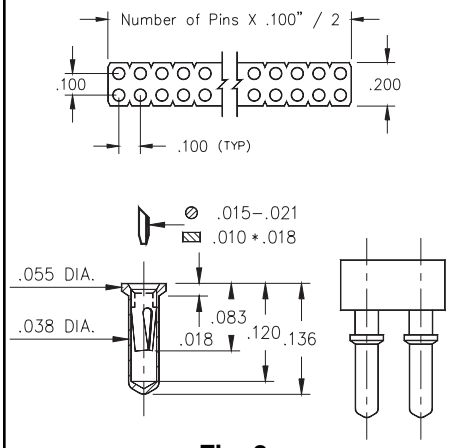


Fig. 3

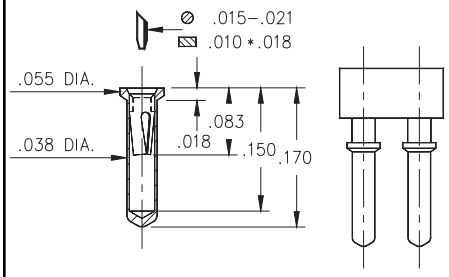


Fig. 4

*For Electrical, Mechanical & Enviromental Data, See pg. 4*

*XX=Plating Code See Below*

*For RoHS compliance select ◇ plating code.*

| SPECIFY PLATING CODE XX= | | | 93 | | | 43◇ | |
|---|---|---|---|---|---|---|---|
| Sleeve (Pin) | | | 200µ" Sn/Pb | | | 200µ"Sn | |
| Contact (Clip) | | | 30µ" Au | | | 30µ" Au | |

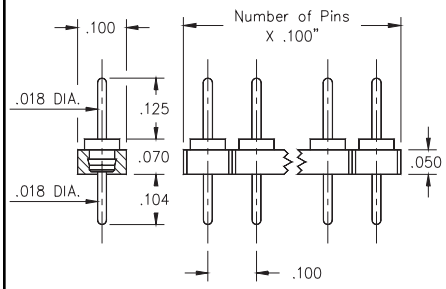


Fig. 1

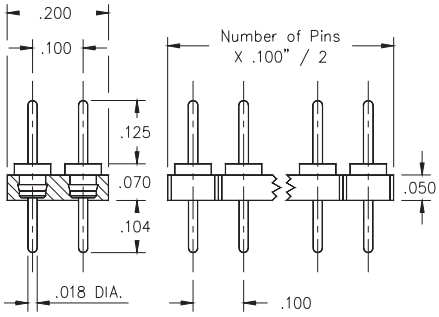


Fig. 2

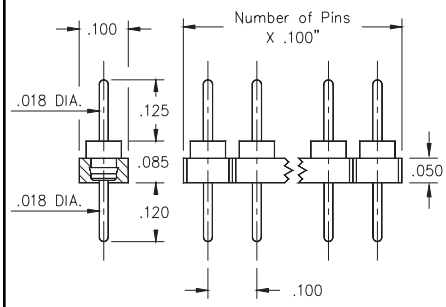


Fig. 3

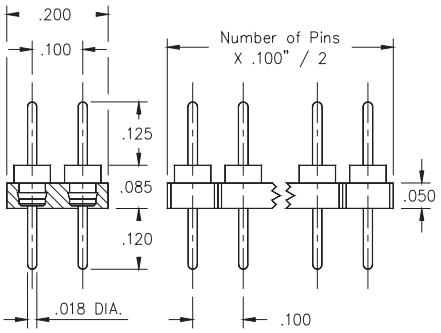


Fig. 4

- Series 335 and 435 single and double row PCB interconnects offer the lowest profile available .070".
- Series 364 and 464 single and double row PCB interconnects offer .085" profile above board.
- Series 335 and 435 use MM #3516 pins. See page 179 for details.
- Series 364 and 464 use MM #6458 pins. See page 180 for details.
- Insulators are high temp. thermoplastic.

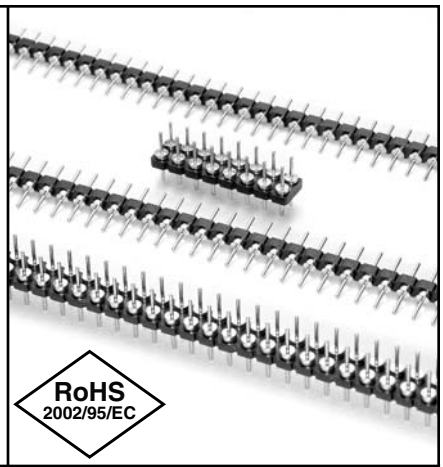


## Ordering Information

| | | |
|---|---|---|
| **Fig. 1** | **Single Row** | **.070" Profile Pin Header** |
| | 335-XX-1_ _-00-160000 | |
| | **Specify # of pins** → | 01-32 |
| **Fig. 2** | **Double Row** | **.070" Profile Pin Header** |
| | 435-XX-2 _ _-00-160000 | |
| | **Specify # of pins** → | 02-72 |
| **Fig. 3** | **Single Row** | **.085" Profile Pin Header** |
| | 364-10-1_ _-00-580000 | |
| | **Specify # of pins** → | 01-32 |
| **Fig. 4** | **Double Row** | **.085" Profile Pin Header** |
| | 464-10-2 _ _-00-580000 | |
| | **Specify # of pins** → | 02-72 |

*For Electrical, Mechanical & Enviromental Data, See pg. 4*

*XX=Plating Code See Below*

*For RoHS compliance select ◇ plating code.*

| SPECIFY PLATING CODE XX= | 10◇ | 90 | 40◇ |
|---|---|---|---|
| Pin Plating | 10µ" Au | 200µ" Sn/Pb | 200µ" Sn |

# HEADER STRIPS
## .100" Grid Interconnect
## Single Row

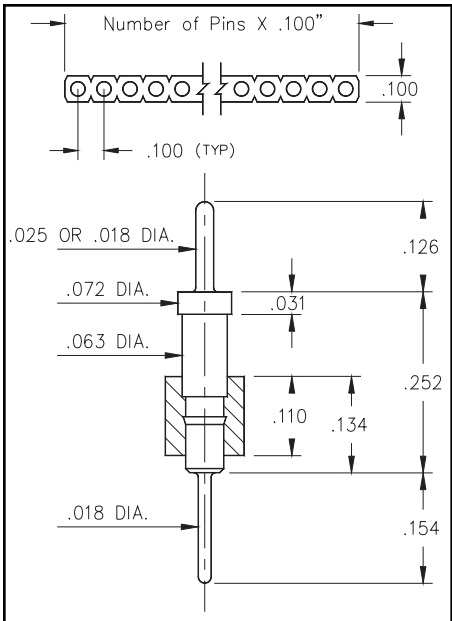


Fig. 1

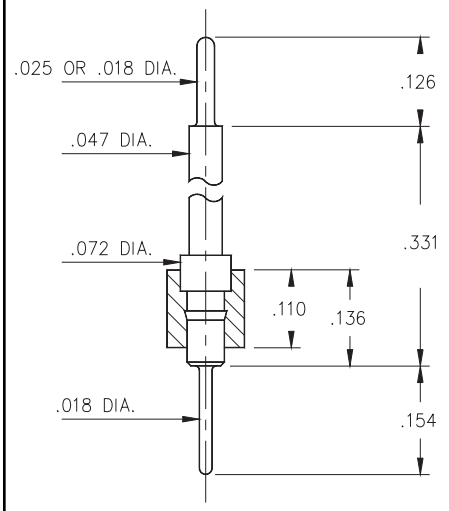


Fig. 2

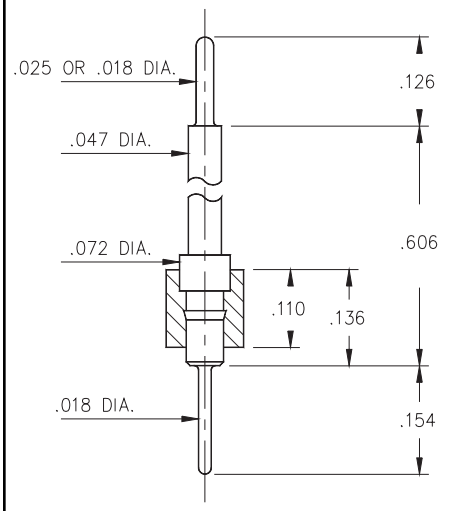


Fig. 3

- Series 351 Interconnect header strips come in three lengths with .018" dia. pluggable solder tails at one end and .025" dia. pins at the other, see series:
  351...003 uses pin #5503
  351...004 uses pin #5504
  351...005 uses pin #5505
- .018" pluggable solder tails are available at both ends, please see series:
  351...009 uses pin #5509
  351...010 uses pin #5510
  351...011 uses pin #5511
  See pages 179 & 181 for details.
- Insulators are high temp. thermoplastic.


## Ordering Information

| | | |
|---|---|---|
| Fig. 1 | **Series 351...003** | **.018 / .025 Solder Tails** |
| | 351-10-1_ _-00-003000 | |
| | **Specify # of pins** → | 01-64 |
| | **Series 351...009** | **.018 / .018 Solder Tails** |
| | 351-10-1_ _-00-009000 | |
| | **Specify # of pins** → | 01-64 |
| Fig. 2 | **Series 351...004** | **.018 / .025 Solder Tails** |
| | 351-10-1_ _-00-004000 | |
| | **Specify # of pins** → | 01-64 |
| | **Series 351...010** | **.018 / .018 Solder Tails** |
| | 351-10-1_ _-00-010000 | |
| | **Specify # of pins** → | 01-64 |
| Fig. 3 | **Series 351...005** | **.018 / .025 Solder Tails** |
| | 351-10-1_ _-00-005000 | |
| | **Specify # of pins** → | 01-64 |
| | **Series 351...011** | **.018 / .018 Solder Tails** |
| | 351-10-1_ _-00-011000 | |
| | **Specify # of pins** → | 01-64 |

*For Electrical, Mechanical & Enviromental Data, See pg. 4*

*For RoHS compliance select ◇ plating code.*

| | | | | |
|---|---|---|---|---|
| PLATING CODE = | 10◇ | | | |
| Pin Plating | 10μ" Au | | | |

# HEADER STRIPS
## .100" Grid Interconnect
## Double Row

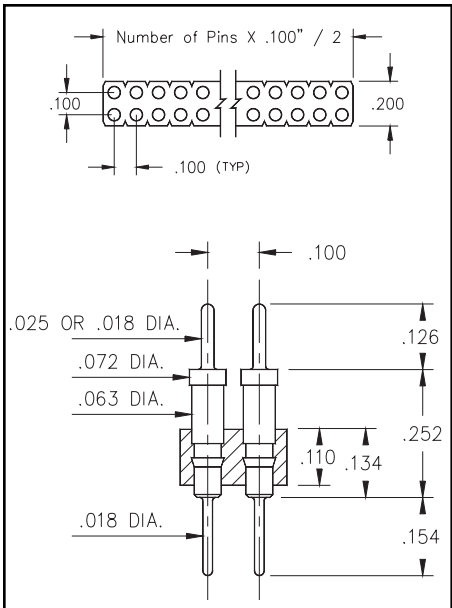


Fig. 1

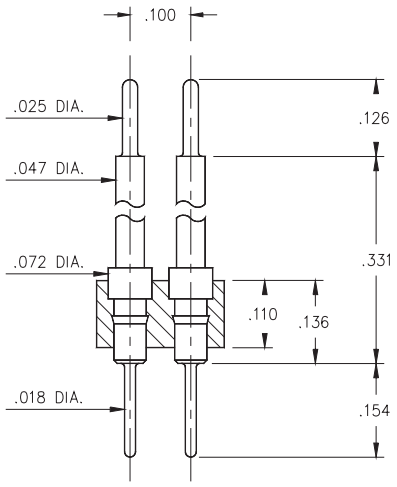


Fig. 2

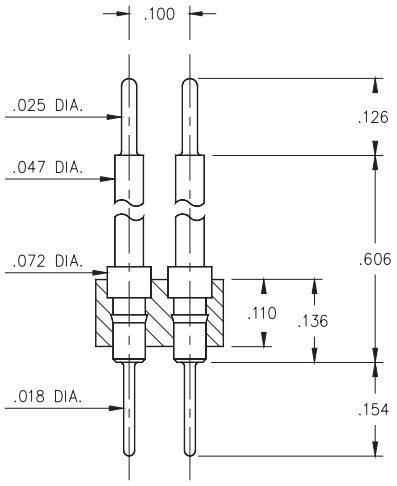


Fig. 3

- Series 451 Interconnect header strips come in three lengths with .018" dia. pluggable solder tails at one end and .025" dia. pins at the other, see series:
  451...003 uses pin #5503
  451...004 uses pin #5504
  451...005 uses pin #5505
- .018" pluggable solder tails are available at both ends, please see series:
  451...009 uses pin #5509
  451...010 uses pin #5510
  451...011 uses pin #5511
  See pages 179 & 181 for details.
- Insulators are high temp. thermoplastic.


## Ordering Information

| | | |
|---|---|---|
| Fig. 1 | **Series 451...003** | **.018 / .025 Solder Tails** |
| | 451-10-2_ _-00-003000 | |
| | **Specify # of pins** → | 02-64 |
| | **Series 451...009** | **.018 / .018 Solder Tails** |
| | 451-10-2_ _-00-009000 | |
| | **Specify # of pins** → | 02-64 |
| Fig. 2 | **Series 451...004** | **.018 / .025 Solder Tails** |
| | 451-10-2_ _-00-004000 | |
| | **Specify # of pins** → | 02-64 |
| | **Series 451...010** | **.018 / .018 Solder Tails** |
| | 451-10-2_ _-00-010000 | |
| | **Specify # of pins** → | 02-64 |
| Fig. 3 | **Series 451...005** | **.018 / .025 Solder Tails** |
| | 451-10-2_ _-00-005000 | |
| | **Specify # of pins** → | 02-64 |
| | **Series 451...011** | **.018 / .018 Solder Tails** |
| | 451-10-2_ _-00-011000 | |
| | **Specify # of pins** → | 02-64 |

*For Electrical, Mechanical & Enviromental Data, See pg. 4*

*For RoHS compliance select ◇ plating code.*

| | | | | |
|---|---|---|---|---|
| PLATING CODE = | 10◇ | | | |
| Pin Plating | 10μ" Au | | | |

# HEADER STRIPS
## .100" Grid Interconnects
## Single Row

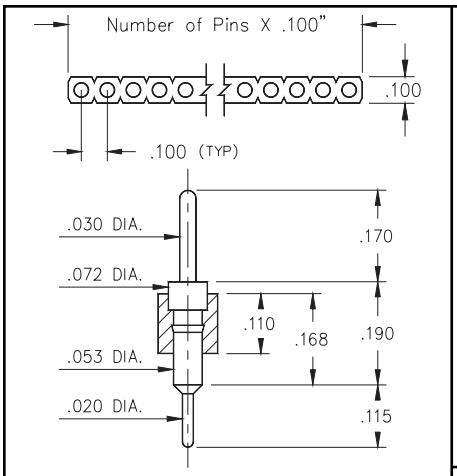


Fig. 1

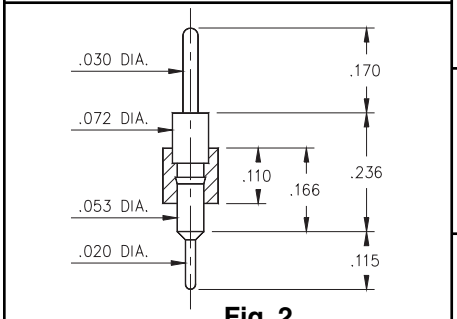


Fig. 2

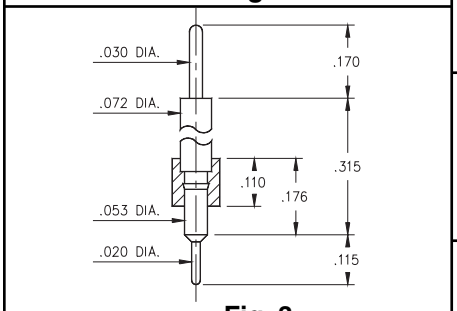


Fig. 3

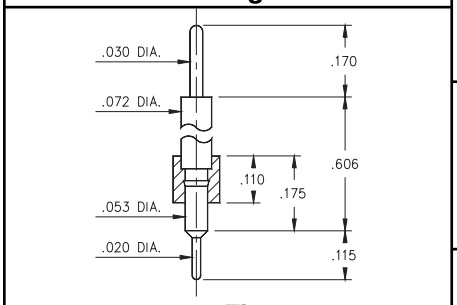


Fig. 4

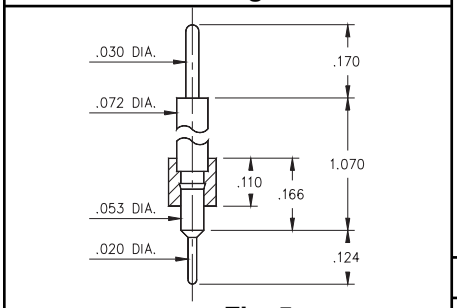


Fig. 5

- Series 334 Interconnect header strips are available in 5 lengths:

  334...020 uses pin #3402 ( L = .190" )
  334...010 uses pin #3401 ( L = .236" )
  334...050 uses pin #3405 ( L = .315" )
  334...000 uses pin #3400 ( L = .606" )
  334...100 uses pin #3410 ( L = 1.070" )
  See pages 182 for details.

- Strips come with .020" pluggable solder tails at one end and .030" tails at the other.
- Insulators are high temp. thermoplastic.


## Ordering Information

| | | |
|---|---|---|
| Fig. 1 | **Series 334...020** | **.020 / .030 Solder Tails** |
| | 334-XX-1_ _-00-020000 | |
| | **Specify # of pins** → | 01-64 |
| Fig. 2 | **Series 334...010** | **.020 / .030 Solder Tails** |
| | 334-XX-1_ _-00-010000 | |
| | **Specify # of pins** → | 01-64 |
| Fig. 3 | **Series 334...050** | **.020 / .030 Solder Tails** |
| | 334-XX-1_ _-00-050000 | |
| | **Specify # of pins** → | 01-64 |
| Fig. 4 | **Series 334...000** | **.020 / .030 Solder Tails** |
| | 334-XX-1_ _-00-000000 | |
| | **Specify # of pins** → | 01-64 |
| Fig. 5 | **Series 334...100** | **.020 / .030 Solder Tails** |
| | 334-XX-1_ _-00-100000 | |
| | **Specify # of pins** → | 01-64 |

*For Electrical, Mechanical & Enviromental Data, See pg. 4*

*XX=Plating Code See Below*

*For RoHS compliance select ◇ plating code.*

| SPECIFY PLATING CODE XX= | 10◇ | 90 | 40◇ |
|---|---|---|---|
| Pin Plating | 10µ" Au | 200µ" Sn/Pb | 200µ" Sn |

# HEADER STRIPS
## .100" Grid Board Stacking Headers
## Single Row

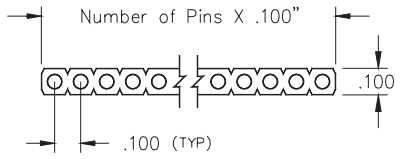


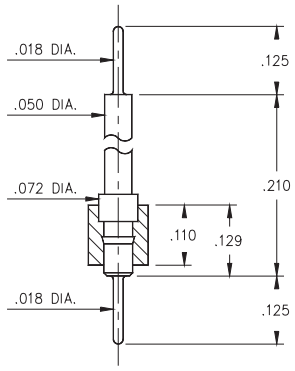


Fig. 1

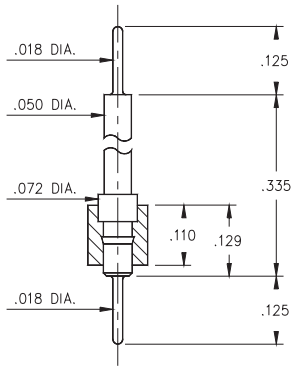


Fig. 2

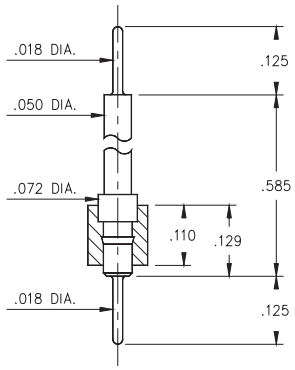


Fig. 3

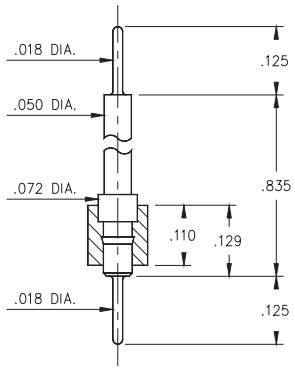


Fig. 4

- Series 342 Interconnect Header strips come in four heights with .018" dia. pluggable solder tails at both ends.

  342...591 uses pin #4259-1 ( L = .210" )
  342...592 uses pin #4259-2 ( L = .335" )
  342...593 uses pin #4259-3 ( L = .585" )
  342...594 uses pin #4259-4 ( L = .835" )
  See pages 179 for details.

- Insulators are high temp. thermoplastic.


## Ordering Information

| | | | |
|---|---|---|---|
| **Fig. 1** | **Series 342...591** | **.018 / .018** | **Solder Tails** |
| | 342-XX-1_ _-00-591000 | | |
| | **Specify # of pins** → 01-64 | | |
| **Fig. 2** | **Series 342...592** | **.018 / .018** | **Solder Tails** |
| | 342-XX-1_ _-00-592000 | | |
| | **Specify # of pins** → 01-64 | | |
| **Fig. 3** | **Series 342...593** | **.018 / .018** | **Solder Tails** |
| | 342-XX-1_ _-00-593000 | | |
| | **Specify # of pins** → 01-64 | | |
| **Fig. 4** | **Series 342...594** | **.018 / .018** | **Solder Tails** |
| | 342-XX-1_ _-00-594000 | | |
| | **Specify # of pins** → 01-64 | | |

*For Electrical, Mechanical & Enviromental Data, See pg. 4*

*XX=Plating Code See Below*

*For RoHS compliance select ◇ plating code.*

| SPECIFY PLATING CODE XX= | 10◇ | 90 | 40◇ |
|---|---|---|---|
| Pin Plating | 10µ" Au | 200µ" Sn/Pb | 200µ" Sn |

# HEADER STRIPS
## .100" Grid Board Stacking Headers
## Double Row

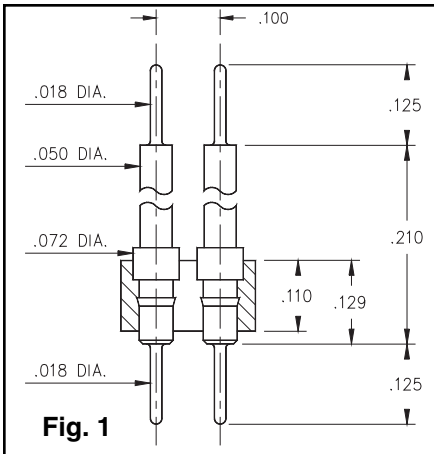

Fig. 1

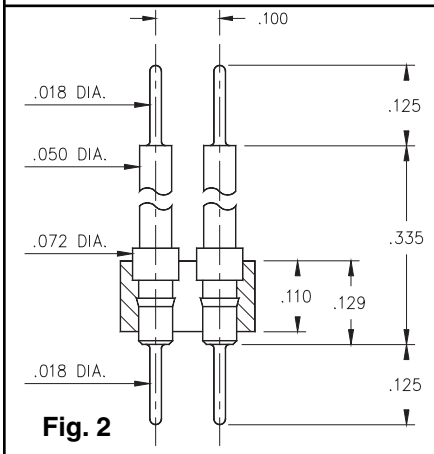

Fig. 2

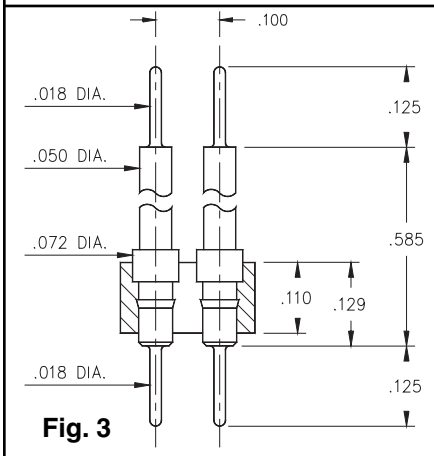

Fig. 3

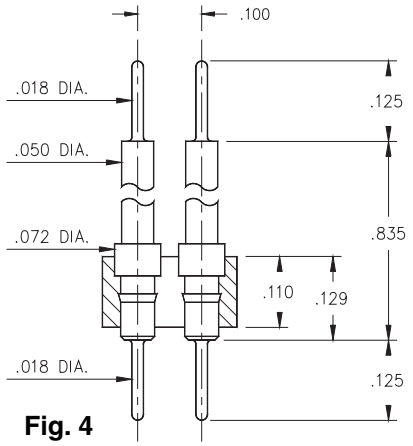

Fig. 4

- Series 442 Interconnect Header strips come in four heights with .018" dia. pluggable solder tails at both ends.

  442...591 uses pin #4259-1 ( L = .210" )
  442...592 uses pin #4259-2 ( L = .335" )
  442...593 uses pin #4259-3 ( L = .585" )
  442...594 uses pin #4259-4 ( L = .835" )
  See pages 179 for details.

- Insulators are high temp. thermoplastic.


## Ordering Information

| | |
|---|---|
| **Fig. 1** | **Series 442...591 .018 / .018 Interconnect**<br>442-XX-2_ _-00-591000<br>**Specify # of pins** → 02-64 |
| **Fig. 2** | **Series 442...592 .018 / .018 Interconnect**<br>442-XX-2_ _-00-592000<br>**Specify # of pins** → 02-64 |
| **Fig. 3** | **Series 442...593 .018 / .018 Interconnect**<br>442-XX-2_ _-00-593000<br>**Specify # of pins** → 02-64 |
| **Fig. 4** | **Series 442...594 .018 / .018 Interconnect**<br>442-XX-2_ _-00-594000<br>**Specify # of pins** → 02-64 |

*For Electrical, Mechanical & Enviromental Data, See pg. 4*

*XX=Plating Code See Below*

*For RoHS compliance select ◇ plating code.*

| SPECIFY PLATING CODE XX= | 10◇ | 90 | 40◇ |
|---|---|---|---|
| Pin Plating | 10μ" Au | 200μ" Sn/Pb | 200μ" Sn |

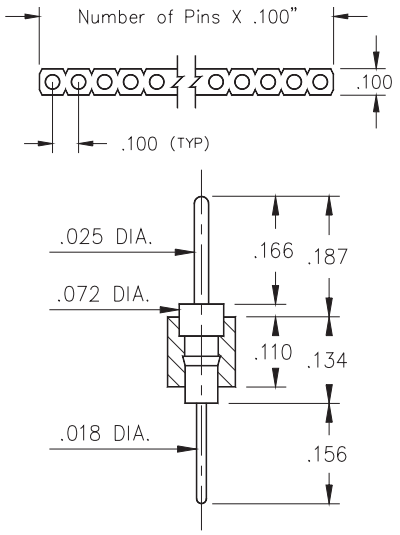


Fig. 1

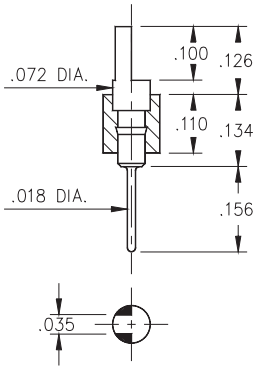


Fig. 2

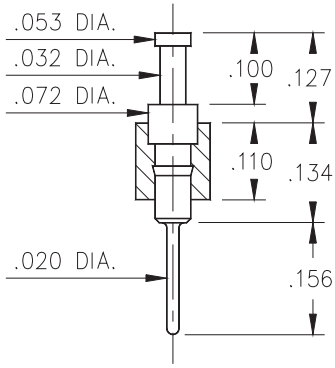


Fig. 3

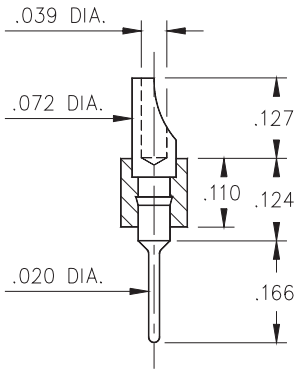


Fig. 4

- Series 350, 360, 370 & 380 single row Header strips come with various styles (pin, slotted head, turret and solder cup) with pluggable solder tails.

  350...001 uses pin #0290
  360...001 uses pin #0282
  370...001 uses pin #0700
  380...001 uses pin #8000
  See pages 182 & 183 for details.

- Insulators are high temp. thermoplastic.

RoHS 2002/95/EC

## Ordering Information

| | | |
|---|---|---|
| Fig. 1 | **Series 350...001** | **.025 Pin / .018 Solder Tail** |
| | 350-XX-1_ _-00-001000 | |
| | **Specify # of pins** → | 01-64 |
| Fig. 2 | **Series 360...001** | **Slotted Head / Solder Tail** |
| | 360-XX-1_ _-00-001000 | |
| | **Specify # of pins** → | 01-64 |
| Fig. 3 | **Series 370...001** | **Turret / Solder Tail** |
| | 370-XX-1_ _-00-001000 | |
| | **Specify # of pins** → | 01-64 |
| Fig. 4 | **Series 380...001** | **Solder Cup / Solder Tail** |
| | 380-XX-1_ _-00-001000 | |
| | **Specify # of pins** → | 01-64 |

*For Electrical, Mechanical & Enviromental Data, See pg. 4*

*XX=Plating Code See Below*

*For RoHS compliance select ◇ plating code.*

| SPECIFY PLATING CODE XX= | 10◇ | 90 | 40◇ |
|---|---|---|---|
| Pin Plating | 10µ" Au | 200µ" Sn/Pb | 200µ" Sn |

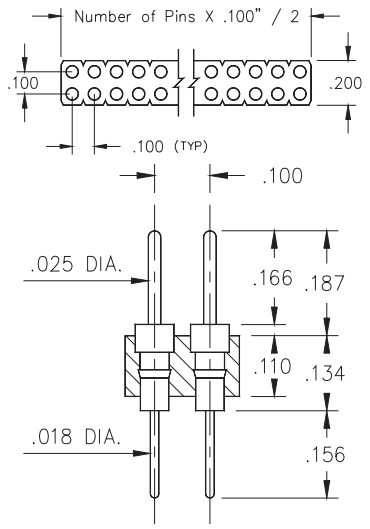


Fig. 1

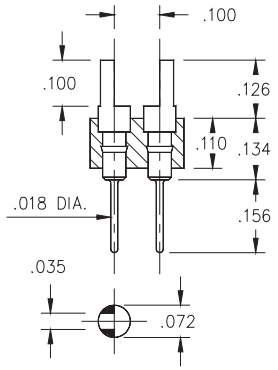


Fig. 2

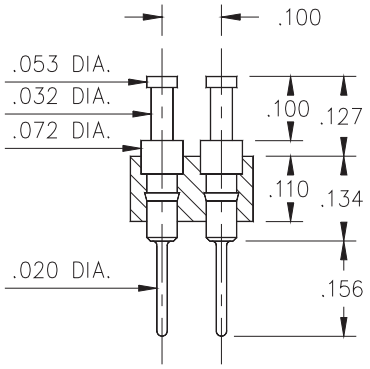


Fig. 3

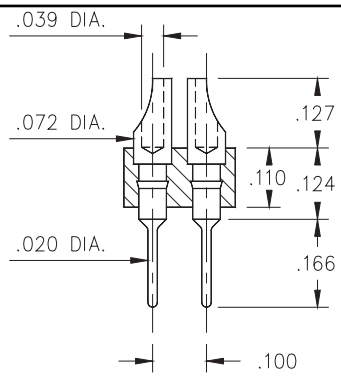


Fig. 4

- Series 450, 460, 470 & 480 double row Header strips come with various styles (pin, slotted head, turret and solder cup) with pluggable solder tails.

  450...001 uses pin #0290
  460...001 uses pin #0282
  470...001 uses pin #0700
  480...001 uses pin #8000
  See pages 182 & 183 for details.

- Insulators are high temp. thermoplastic.

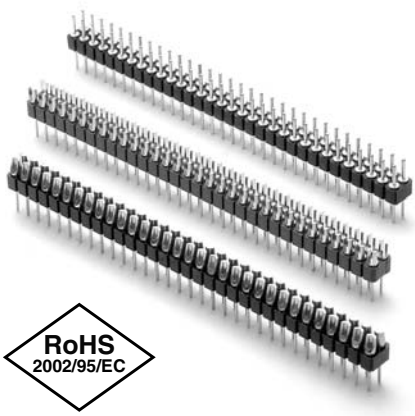


## Ordering Information

| | | |
|---|---|---|
| **Fig. 1** | **Series 450...001** | **Pin / Solder Tail** |
| | 450-XX-2_ _-00-001000 | |
| | **Specify # of pins** → | 02-64 |
| **Fig. 2** | **Series 460...001** | **Slotted Head / Solder Tail** |
| | 460-10-2_ _-00-001000 | |
| | **Specify # of pins** → | 02-64 |
| **Fig. 3** | **Series 470...001** | **Turret / Solder Tail** |
| | 470-XX-2_ _-00-001000 | |
| | **Specify # of pins** → | 02-64 |
| **Fig. 4** | **Series 480...001** | **Solder Cup / Solder Tail** |
| | 480-10-2_ _-00-001000 | |
| | **Specify # of pins** → | 02-64 |

*For Electrical, Mechanical & Enviromental Data, See pg. 4*

*XX=Plating Code See Below*

*For RoHS compliance select ◇ plating code.*

| SPECIFY PLATING CODE XX= | 10◇ | 90 | 40◇ |
|---|---|---|---|
| Pin Plating | 10µ" Au | 200µ" Sn/Pb | 200µ" Sn |

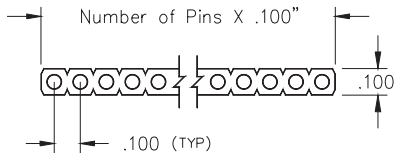


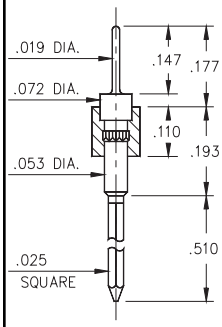


Fig. 1

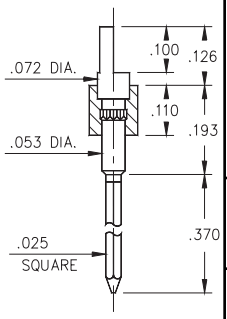


Fig. 2

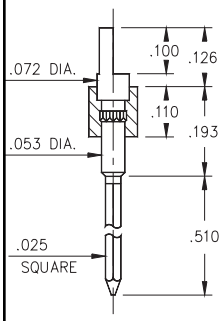


Fig. 3

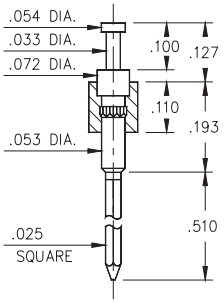


Fig. 4

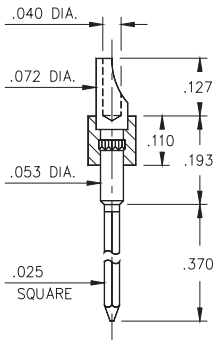


Fig. 5

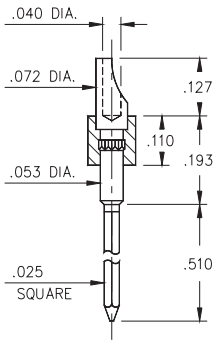


Fig. 6

- Series 353, 362, 363, 373, 382 & 383 single row Header strips come with various styles (pin, slotted head, turret and solder cup) with wrapost tails.

  353...001 uses pin #5301
  362...001 uses pin #1106-2
  363...001 uses pin #1106-3
  373...001 uses pin #0730-3
  382...001 uses pin #8301-2
  383...001 uses pin #8301-3
  See pages 194 & 195 for details.

- Insulators are high temp. thermoplastic.

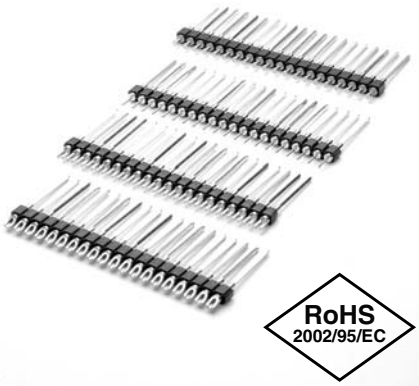


## Ordering Information

| | | |
|---|---|---|
| Fig. 1 | **Series 353...001** | **Pin / 3 Level Wrapost** |
| | 353-XX-1_ _-00-001000 | |
| | **Specify # of pins** → | 01-64 |
| Fig. 2 | **Series 362...001** | **Slotted Head / 2 Level Wrapost** |
| | 362-XX-1_ _-00-001000 | |
| | **Specify # of pins** → | 01-64 |
| Fig. 3 | **Series 363...001** | **Slotted Head / 3 Level Wrapost** |
| | 363-XX-1_ _-00-001000 | |
| | **Specify # of pins** → | 01-64 |
| Fig. 4 | **Series 373..001** | **Turret / 3 Level Wrapost** |
| | 373-XX-1_ _-00-001000 | |
| | **Specify # of pins** → | 01-64 |
| Fig. 5 | **Series 382...001** | **Solder Cup / 2 Level Wrapost** |
| | 382-XX-1_ _-00-001000 | |
| | **Specify # of pins** → | 01-64 |
| Fig. 6 | **Series 383...001** | **Solder Cup / 3 Level Wrapost** |
| | 383-XX-1_ _-00-001000 | |
| | **Specify # of pins** → | 01-64 |

*For Electrical, Mechanical & Enviromental Data, See pg. 4*

*XX=Plating Code See Below*

*For RoHS compliance select ◇ plating code.*

| SPECIFY PLATING CODE XX= | 10◇ | 90 | 40◇ |
|---|---|---|---|
| Pin Plating | 10µ" Au | 200µ" Sn/Pb | 200µ" Sn |

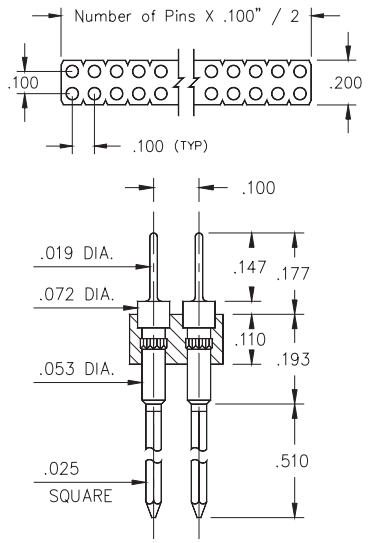


Fig. 1

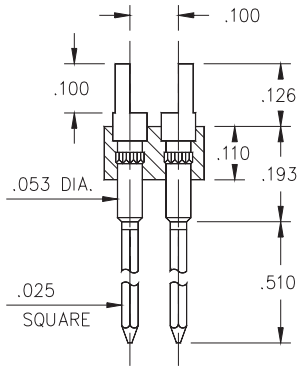


Fig. 2

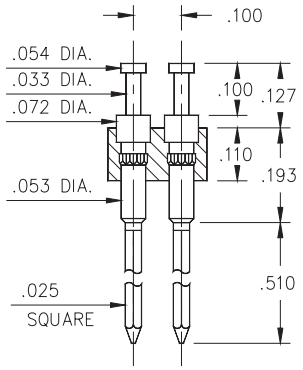


Fig. 3

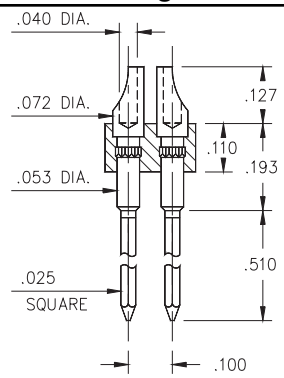


Fig. 4

- Series 453, 463, 473, and 483 double row Header strips come with various styles (pin, slotted head, turret and solder cup) with wrapost tails.

  453...001 uses pin #5301
  463...001 uses pin #1106-3
  473...001 uses pin #0730-3
  483...001 uses pin #8301-3
  See pages 194 & 195 for details.

- Insulators are high temp. thermoplastic.

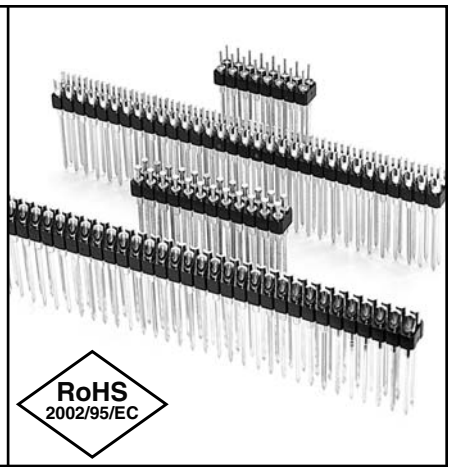


## Ordering Information

| | | |
|---|---|---|
| **Fig. 1** | **Series 453...001** | **Pin / 3 Level Wrapost** |
| | 453-10-2_ _-00-001000 | |
| | **Specify # of pins** → | 02-64 |
| **Fig. 2** | **Series 463...001** | **Slotted Head / 3 Level Wrapost** |
| | 463-XX-2_ _-00-001000 | |
| | **Specify # of pins** → | 02-64 |
| **Fig. 3** | **Series 473...001** | **Turret / 3 Level Wrapost** |
| | 473-XX-2_ _-00-001000 | |
| | **Specify # of pins** → | 02-64 |
| **Fig. 4** | **Series 483...001** | **Solder Cup / 3 Level Wrapost** |
| | 483-XX-2_ _-00-001000 | |
| | **Specify # of pins** → | 02-64 |

*For Electrical, Mechanical & Enviromental Data, See pg. 4*

*XX=Plating Code See Below*

*For RoHS compliance select ◇ plating code.*

| SPECIFY PLATING CODE XX= | 10◇ | 90 | 40◇ |
|---|---|---|---|
| Pin Plating | 10µ" Au | 200µ" Sn/Pb | 200µ" Sn |

Pin grid array sockets are designed to accept high pin count IC's. They use low force 6-finger contacts to ease insertion/extraction of the device. Standard low force (M-M #32) contact is used for pin counts up to 150, ultra-low force (M-M #35) contact is recommended for 150 pins or more but less than 250 pins. The "ultra lite" (M-M #43) is recommended for 250 pins or more.

**CONTACT DETAIL**

PGA sockets all have precision-machined pins, this offers the lowest possible profile. The closed bottom design also eliminates flux and solder contamination, and the pins are in-line with contact entry.

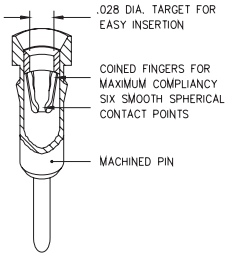


Insulator bodies are molded from high temp. PCT polyester suitable for all forms of soldering including wave, infra-red reflow and vapor phase.

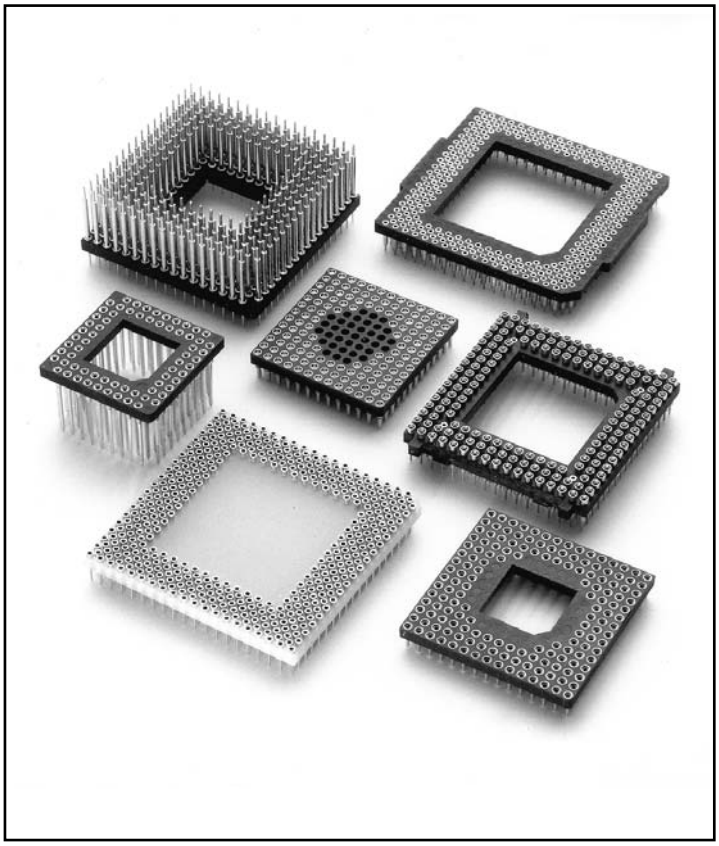

**TECHNICAL SPECIFICATIONS**

**Materials**

**Insulator body:**

High Temp. glass-filled thermoplastic polyester (PCT)

Heat deflection temperature (HDT @ 264 PSI) = 255°C(490°F)

Self-extinguishing, rated UL94V-0

**Receptacle (Sleeve):**

Screw machined brass (ASTM-B16-00), plated 10μ" gold, 200μ" tin or 200μ" tin-lead (SnPb 90/10) over 100μ" nickel.

**Pin:**

Screw machined brass (ASTM-B16-00), plated 10μ" gold, 200μ" tin or 200μ" tin-lead (SnPb 90/10) over 100μ" nickel.

**Contact (clip):**

Stamped beryllium-copper (ASTM-B194-01), plated 10μ" or 30μ" gold over 50μ" nickel.

**Mechanical Data**

-Insertion characteristics:

Measured with a polished steel gauge .018 diameter

Low force M-M#32 (01 suffix) typ. insertion force 50 grams
typ. extraction force 30 grams

Ultra-low force M-M#35 (02 suffix) typ. insertion force 25 grams
typ. extraction force 15 grams

"Ultra lite" M-M#43 (03 suffix) typ. insertion force 12.5 grams
typ. extraction force 7.5 grams

-Mechanical life: 100 cycles min.

**Electrical & Environmental Data**

-See general specifications on page 4.

**DIMENSIONS OF PGA SOCKET INSULATORS**

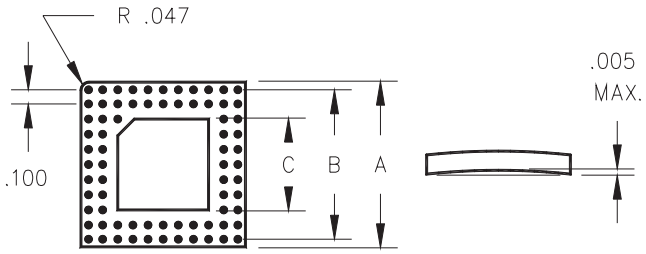


DIMENSIONS **A**, **B**, and **C** can be calculated as follows:

**N1** = GRID SIZE (# of pins per side, outer most row only for interstitial patterns)

**N2** = WINDOW SIZE

**A** = N1 X .100"

**B** = (N1-1) X .100"

**C** = (N2 X .100") - .016"

## TECHNICAL SPECIFICATIONS FOR 540 SERIES PLCC SOCKETS

**MATERIALS:**
- Insulator: Glass filled thermoplastic, self-extinguishing rated, UL94V-0, color black.
- Contact: Plated copper alloy overall nickel underplating, tin finish.

**MECHANICAL DATA:**
- Contact pressure (per contact): 150 grams min.
- Mechanical data (cycles): 50 cycles min.

**ELECTRICAL DATA:**
- Rated current: SMD types: 1A
  Thru-hole types: 2A
- Contact resistance: 20 mΩ max.
- Insulation resistance: 5,000 MΩ min.
- Dielectric strength: 600 VRMS
- Capacitance: 2pF max.

**ENVIRONMENTAL DATA:**
- Operating temperature: -55/+125 °C
- Vibration (No electrical discontinuity greater than 1μs): 10-2000 HZ, 15 g
- Climactic category (EIA): 365-17A

## TECHNICAL SPECIFICATIONS FOR 940 SERIES PLCC SOCKETS

**MATERIALS:**
- Insulator: PPS Polyphenylene Sulfide,Rated UL94V-0.
- Contact: Phosphor Bronze with a tin finish and nickel underplate.

**MECHANICAL DATA:**
- Contact pressure (per contact): 150 grams min.
- Mechanical data (cycles): 25 cycles min.

**ELECTRICAL DATA:**
- Rated current: SMD types: 1A
  Thru-hole types: 1A
- Contact resistance: 30 mΩ max.
- Insulation resistance: 10,000 MΩ min.
- Dielectric strength: 600 VAC
- Capacitance: 1pF max.

**ENVIRONMENTAL DATA:**
- Operating temperature: -55/+105 °C
- Vibration (No electrical discontinuity greater than 1μs): 10-2000 HZ, 15 g
- Climactic category (EIA): 365-17A

## TECHNICAL SPECIFICATIONS FOR BGA ADAPTER SYSTEM

**Materials:**
- Socket contact: Three finger, stamped beryllium copper alloy 172, HT (Mill-Max type #04 or #05); plated 10μ" gold over 50μ" nickel.
- Socket shell and adapter pins: Precision machined brass alloy; plated 10μ" gold over 100μ" nickel.
- Insulator material: .047" or .062" thick glass-epoxy type FR-4, rated UL94V-0. TCE = 10-13ppm/°C, $\varepsilon_r = 5.0$

**Mechanical:**
- Insertion and withdrawal forces (using .010" dia. polished steel gage pin): Insertion: .36N typ. per pin
  Withdrawal: .20N typ. per pin
- Insertion force of an actual 225 pin device: 90N
- Durability: 100 cycles
- Coplanarity: ≤.005"

**Electrical:**
- Current rating (per pin): 1 A
- Working voltage: 100 VRMS/150 VDC max.
- Low level contact resistance: 10 mΩ max.
- Insulation resistance @ 500 VRMS:
  Initial value: 1,000,000 MΩ min.
  After climatic tests: 10,000 MΩ min.
- Dielectric withstanding voltage: 500 $V_{RMS}$
- Capacitance between adjacent contacts: 1 pF max.
- Self inductance per pin: 2 nH max.
- Electrical length: 31 pS

**Environmental:**
- Operating temperature range: -55 °C to +125 °C

BGA adapter/socket systems have withstood the following environmental tests without mechanical or electrical failure:
- Damp heat, steady state: 40 °C, 93% rH, 21 days
- Damp heat, cyclic: 25/55 °C, 6 days
- Dry heat: 100°C, 1,000 hours
- Thermal shock: -55 to +125 °C, 5 cycles
- Random vibration: 50 to 500 Hz, 8g, 20 min. per axis
- Shock: 50 g per axis
- Solderability: 235 °C, 2 seconds
- Resistance to soldering heat: 270 °C, 10 seconds
- Resistance to corrosion:

Salt spray: 48 hours

Sulphur dioxide: 96 hours @ 25 ppm $SO_2$, 25 °C, 75% rH

Hydrogen sulphide: 96 hours @ 12 ppm $H_2S$, 25°C, 75% rH

# PIN GRID ARRAY SOCKETS .100" and Interstitial Grid Surface Mount and Through Hole

## Series 510, 511, 513, 514, 515, 518, 522, 523

- Series 510, 511, 514, 515, 522 & 523 PGA sockets are available on .100" centers.
- Series 513 and 518 PGA sockets are available for Interstitial patterns.
- Choice of three low force clips to cover all applications.
- Hi-Temp PCT polyester insulator material suitable for all forms of soldering.

*For RoHS compliance select ◇ plating code.*

*For Electrical, Mechanical & Enviromental Data, See pg. 112*

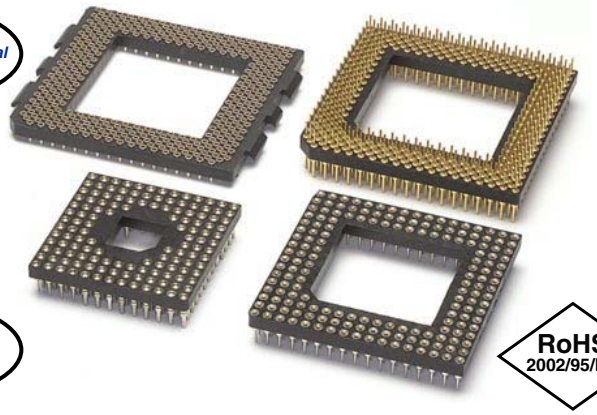

*XX=Plating Code See Below*

RoHS 2002/95/EC

### STANDARD SOLDER TAIL SERIES 510

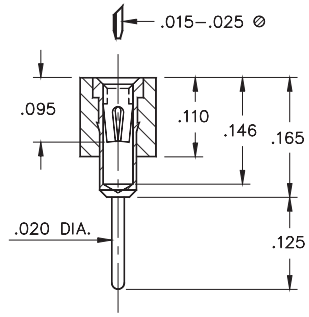


### LONG SOLDER TAIL SERIES 511

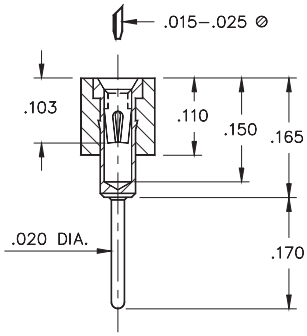


### SMT RECEPTACLE SERIES 513

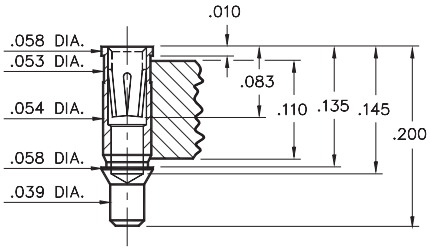


**Interstitial Patterns Only**

### SMT RECEPTACLE SERIES 514

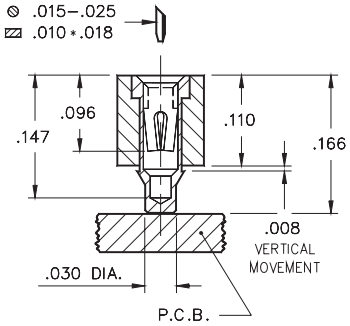


### LOW PROFILE SOLDER TAIL SERIES 515

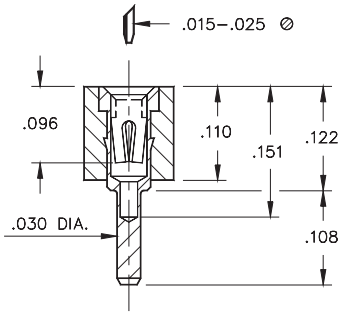


### SOLDER TAIL (Without Heatsink Tabs) SERIES 518

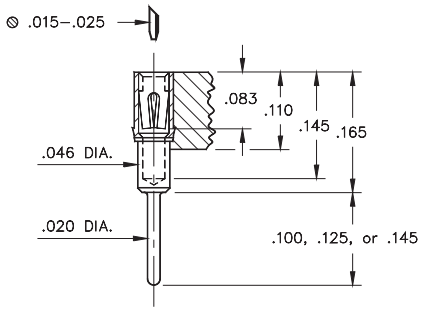


**Interstitial Patterns Only**

### SOLDER TAIL (With Heatsink Tabs) SERIES 518

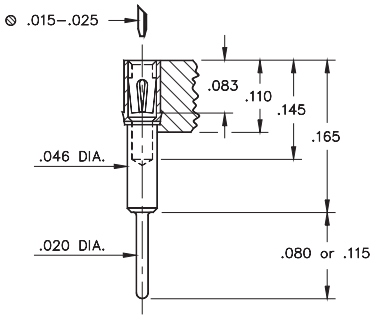


**Interstitial Patterns Only**

### 2 LEVEL WRAPOST SERIES 522

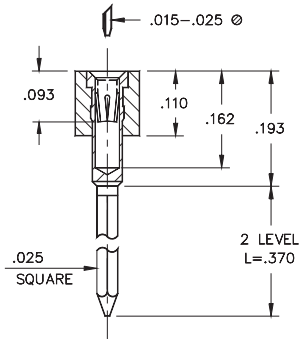


### 3 LEVEL WRAPOST SERIES 523

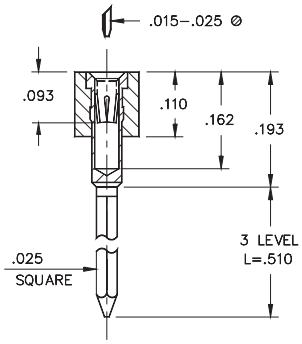


*Visit www.mill-max.com/pga To configure a formal Part Number*

| SPECIFY PLATING CODE XX= | 13◇ | | 93 | | | 43◇ | |
|---|---|---|---|---|---|---|---|
| Sleeve (Pin) | 10μ" Au | | 200μ" Sn/Pb | | | 200μ"Sn | |
| Contact (Clip) | 30μ" Au | | 30μ" Au | | | 30μ" Au | |

- Series 551 and 599 headers are available on .100" centers.

  Series 507 & 550 PGA sockets are available for Interstitial patterns.

- Hi-Temp PCT polyester insulator material suitable for all forms of soldering.

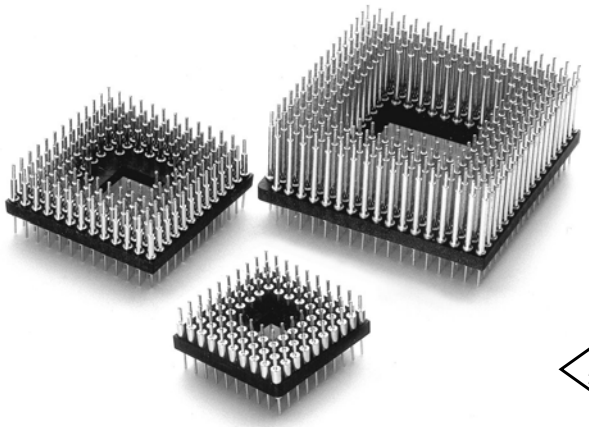

RoHS 2002/95/EC

**SMT HEADER PIN TYPE 0737**
**SERIES 507**

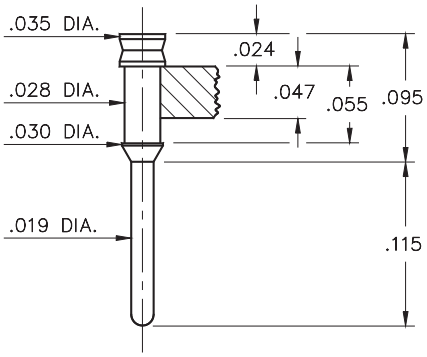


**Interstitial Patterns Only**

**HEADER PIN TYPE 5012**
**SERIES 550**

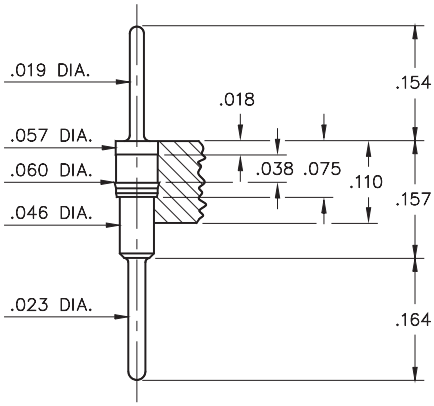


**Interstitial Patterns Only**

**HEADER PIN TYPE 5503**
**SERIES 551**

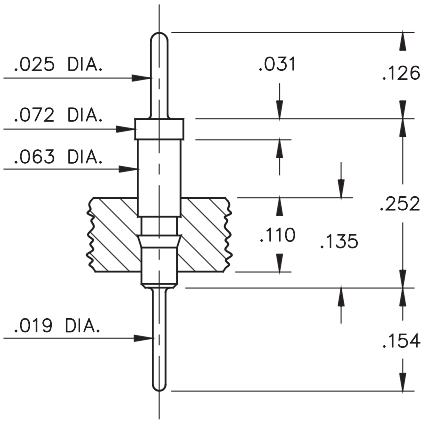


**HEADER PIN TYPE 5504 & 5505**
**SERIES 551**

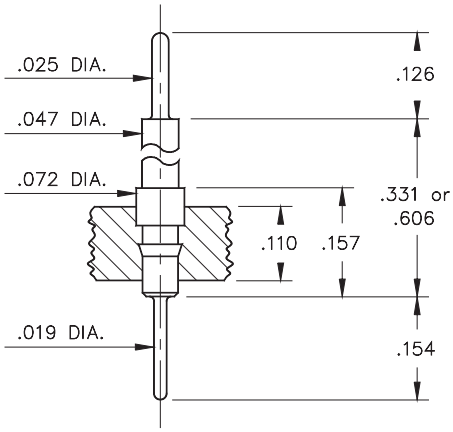


**SMT HEADER PIN TYPE 9976**
**SERIES 599**

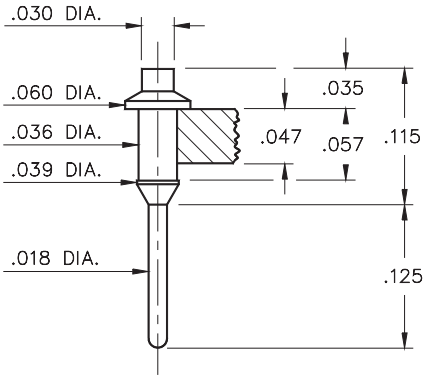


*For Electrical, Mechanical & Enviromental Data, See pg. 112*

*XX=Plating Code See Below*

*For RoHS compliance select ◇ plating code.*

*Visit www.mill-max.com/pga To configure a formal Part Number*

| SPECIFY PLATING CODE XX= | 10◇ | 90 | 40◇ |
|---|---|---|---|
| Pin Plating | 10µ" Au | 200µ" Sn/Pb | 200µ" Sn |

- Series 614 & 605 PGA carrier sockets offer 4 receptacle styles.
- Many combinations of receptacles and clips to cover all applications.
- Hi-Temp PCT polyester insulator material suitable for all forms of soldering.
- Carrier sockets provide a convenient way of loading groups of receptacles onto a PC board.

**APPLICATION OF PGA SOCKET CARRIERS**

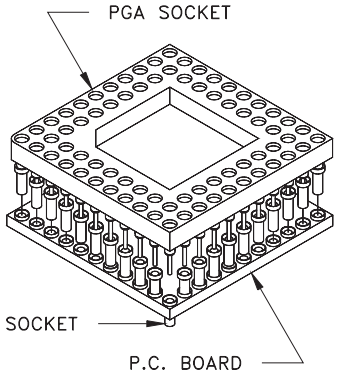


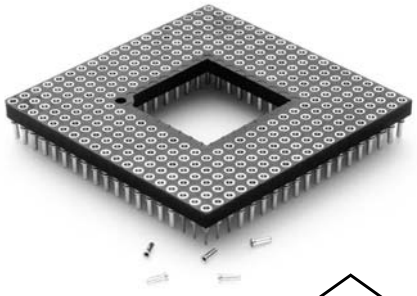

RoHS 2002/95/EC

### LOW PROFILE SOCKET SERIES 614...001, 002, 003

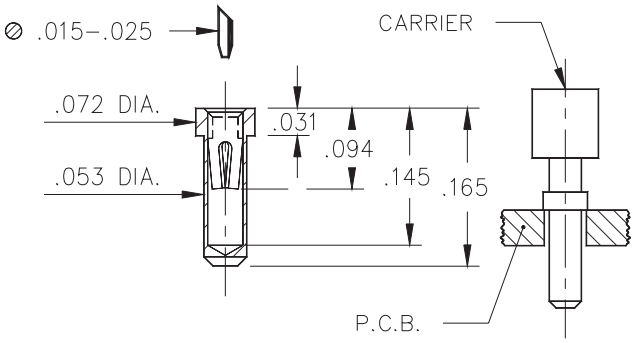


**For .100" Grid Only**

### MINIATURE SOCKET SERIES 614...007

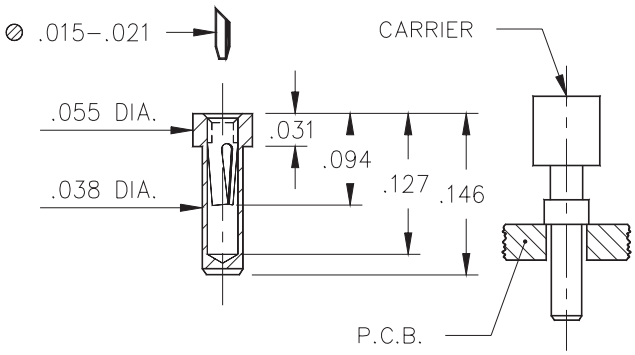


### LOWEST PROFILE SOCKET SERIES 614...012

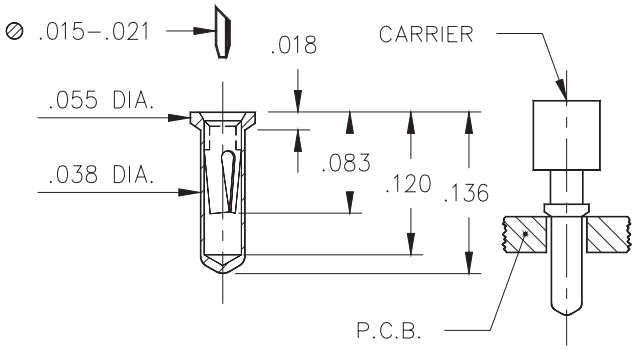


### REDUCED BARREL SOCKET SERIES 605...048

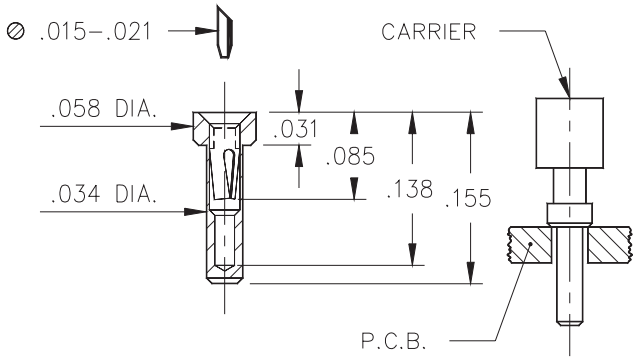


*For Electrical, Mechanical & Enviromental Data, See pg. 112*

*XX=Plating Code See Below*

*For RoHS compliance select ◇ plating code.*

*Visit www.mill-max.com/pgacarrier To configure a formal Part Number*

| SPECIFY PLATING CODE XX= | 13◇ | | 93 | | | 43◇ | |
|---|---|---|---|---|---|---|---|
| Sleeve (Pin) | 10µ" Au | | 200µ" Sn/Pb | | | 200µ"Sn | |
| Contact (Clip) | 30µ" Au | | 30µ" Au | | | 30µ" Au | |

# BALL GRID ARRAYS Series 540, 579, 582, 587, 599
## For 0,8mm Grid, 1mm Grid and .050”Grid
## Male Pin Adapters & Female Sockets

- BGA adapter/socket systems are a reliable way to make BGAs pluggable. They may also be used as a high density board-to-board interconnect.
- The BGA device for a 0,8mm or 1mm grid is soldered to a 9929 adapter (or a 7929 adapter is soldered to a PCB), then either one can be plugged into a 9942 (0.8mm grid) or 9928 (1mm grid) surface mount socket.
- The BGA device for a .050” grid is soldered to a 8737/4048 adapter (or a 4098/4054 adapter is soldered to a PCB), then either one can be plugged into a 8214 surface mount socket.
- Both socket and adapter have the same footprint as the BGA device.
- Insertion force is .4N per pin for standard pins 7929/9929, 8737/4098. Tapered EZ-IN pins 4048/4054 reduce insertion force to only .08N, and are recommended for pin counts greater than 500.
- Insulator material is FR-4 epoxy having a TCE to match the BGA device and circuit board.

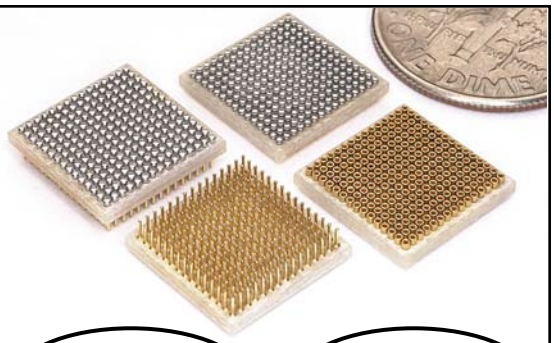

*For Electrical, Mechanical & Enviromental Data, See pg. 113*

***XX=Plating Code See Below***

### BGA MOUNT TYPE 9929 SERIES 599...429

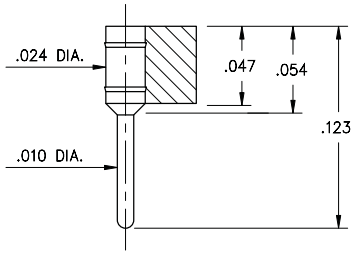


**For 0,8mm & 1mm Grid Only**

### PCB MOUNT TYPE 7929 SERIES 579...429

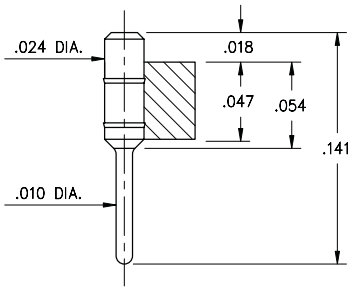


**For 0,8mm & 1mm Grid Only**

### BGA MOUNT TYPE 8737 SERIES 587...437

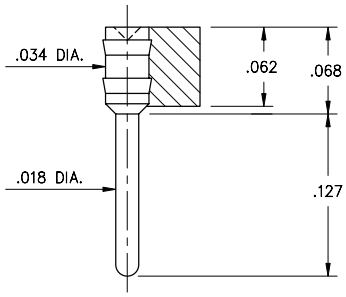


**For .050” Grid Only**

### EZ-IN BGA MOUNT TYPE 4048 SERIES 540...448

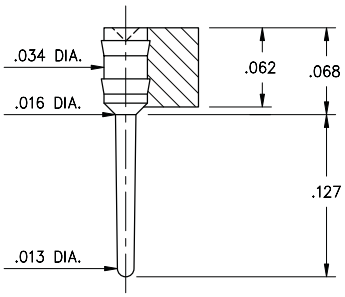


**For .050” Grid Only**

### STANDARD PCB MOUNT TYPE 4098 SERIES 540...498

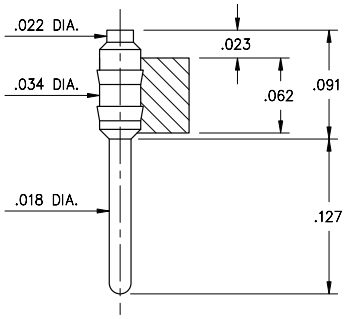


**For .050” Grid Only**

### EZ-IN PCB MOUNT TYPE 4054 SERIES 540...454

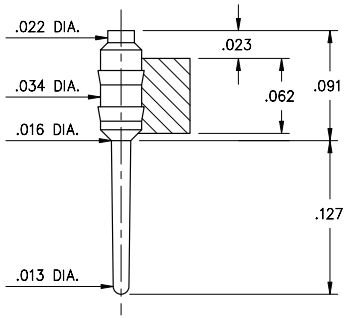


**For .050” Grid Only**

### SURFACE MOUNT TYPE 9942 SERIES 599...442

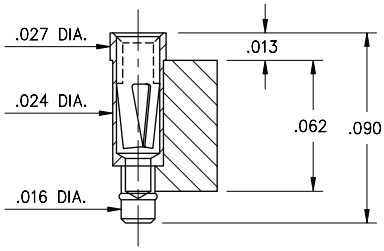


**For 0,8mm Grid Only**

### SURFACE MOUNT TYPE 9928 SERIES 599...428

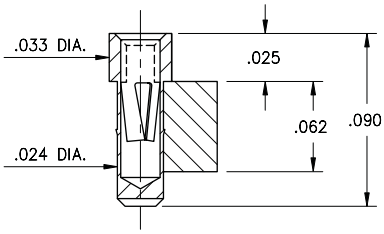


**For 1mm Grid Only**

### SURFACE MOUNT TYPE 8214 SERIES 582...414

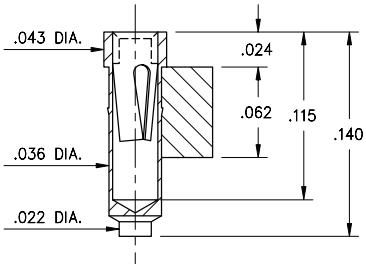


**For .050” Grid Only**

***Visit www.mill-max.com/bga To configure a formal Part Number***

| SPECIFY PLATING CODE XX= | 11◇ | PLATING CODE XX= | 10◇ |
|---|---|---|---|
| Sleeve (Receptacle) | 10µ” Au | Pin Plating | 10µ” Au |
| Contact (Internal Clip) | 10µ” Au | | |

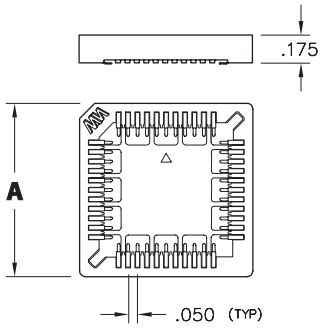


- Note: Not end stackable.
- Accepts JEDEC PLCCs MO-047 and MO-052.
- Low profile for high density PC board stacking.
- Standoffs provide clearance for heat dissipation and cleaning.
- Contacts are plated with 150µ" tin.
- Insulator material is glass reinforced PPS.

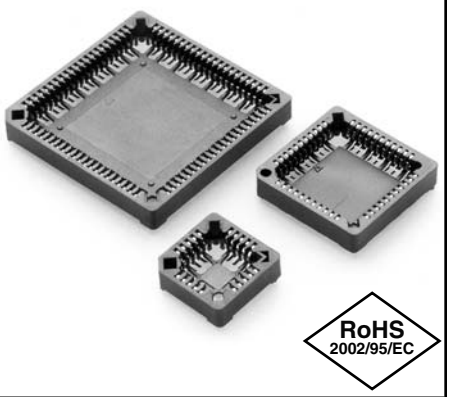


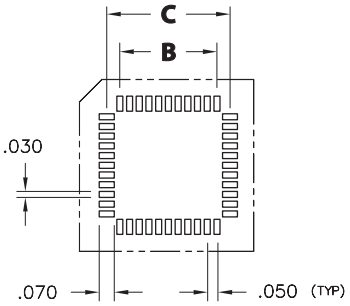


For Electrical, Mechanical & Enviromental Data, See pg. 113

PCB LAYOUT FOR SURFACE MOUNT

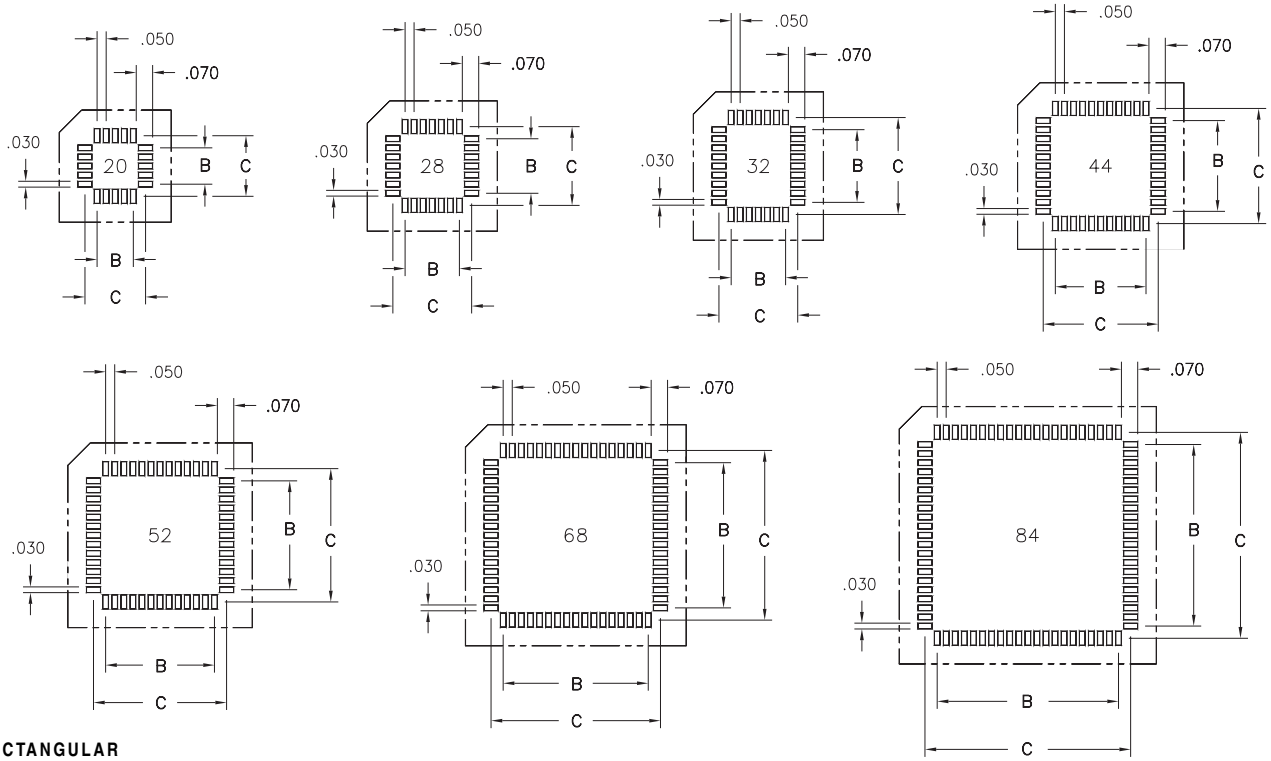


* RECTANGULAR

| No. of Contacts | Ordering Information | - A - | - B - | - C - | Qty. per Tube | Qty. per Reel |
|---|---|---|---|---|---|---|
| 20 | 940-44-020-17-40000X | 0.613 | 0.200 | 0.334 | 32 | 470 |
| 28 | 940-44-028-17-40000X | 0.713 | 0.300 | 0.434 | 27 | 390 |
| 32* | 940-44-032-17-40000X* | .813 / .713 | .400 / .300 | .534 / .434 | 24 | 390 |
| 44 | 940-44-044-17-40000X | 0.900 | 0.500 | 0.634 | 21 | 250 |
| 52 | 940-44-052-17-40000X | 1.013 | 0.600 | 0.734 | 19 | 250 |
| 68 | 940-44-068-17-40000X | 1.213 | 0.800 | 0.934 | 16 | 220 |
| 84 | 940-44-084-17-40000X | 1.413 | 1.000 | 1.134 | 14 | 200 |

Packaging Codes: X = 0 (Tubes)
X = 4 (Tape & Reel)

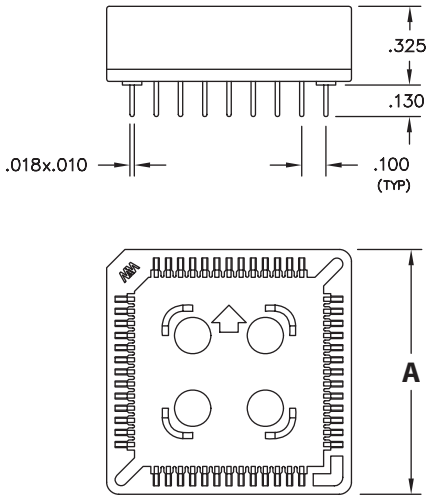


- Note: Not end stackable.
- Accepts JEDEC PLCCs MS-016 & MS-018 leaded plastic substrates.
- Internal standoffs insure proper positioning of chip carrier in socket.
- Standoffs provide clearance for heat dissipation and cleaning.
- Contacts are plated with 150 μ" tin.
- Insulator material is glass reinforced PPS.

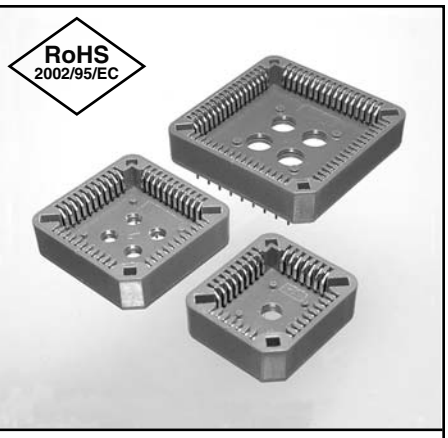


PRINTED CIRCUIT DRILLING PATTERNS
(TOP VIEW)
.035" dia. min. mounting holes

For Electrical, Mechanical & Enviromental Data, See pg. 113

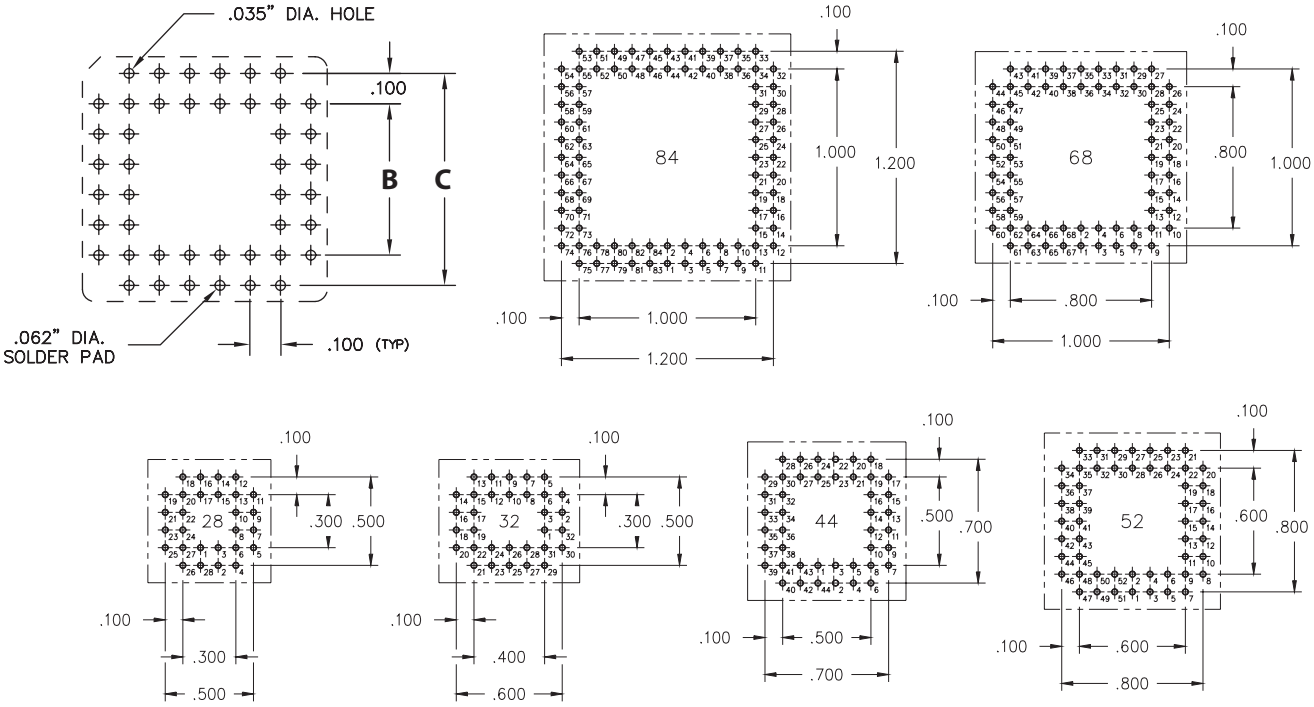


| No. of Contacts | Ordering Information | - A - | - B - | - C - | Quantity per Tube |
|---|---|---|---|---|---|
| 20 | 940-44-020-24-000000 | 0.613 | 0.200 | 0.400 | 38 |
| 28 | 940-44-028-24-000000 | 0.713 | 0.300 | 0.500 | 33 |
| 32* | 940-44-032-24-000000* | .813 / .713 | .400 / .300 | .600 / .500 | 29 |
| 44 | 940-44-044-24-000000 | 0.913 | 0.500 | 0.700 | 26 |
| 52 | 940-44-052-24-000000 | 1.013 | 0.600 | 0.800 | 23 |
| 68 | 940-44-068-24-000000 | 1.213 | 0.800 | 1.000 | 19 |
| 84 | 940-44-084-24-000000 | 1.413 | 1.000 | 1.200 | 16 |
| 100 | 940-44-100-24-000000 | 1.603 | 1.200 | 1.400 | 25 |
| | **Plating Code** 44 ◇ = 150μ" Sn *RECTANGULAR | | | | |

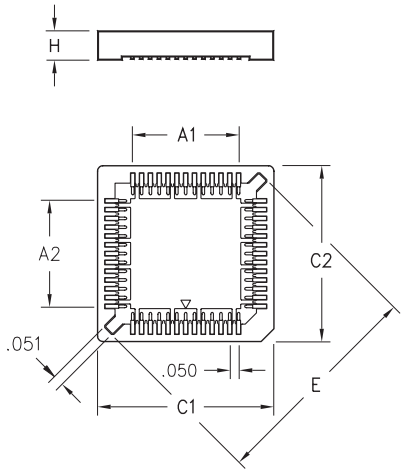


- Note: End stackable.
- Designed for JEDEC type devices.
- Open frame design in solder area improves results of IR soldering and facilitates visual inspection of solder pads.
- Contacts are plated with 150µ" tin.
- The insulator is molded PPS (Ryton R-4).

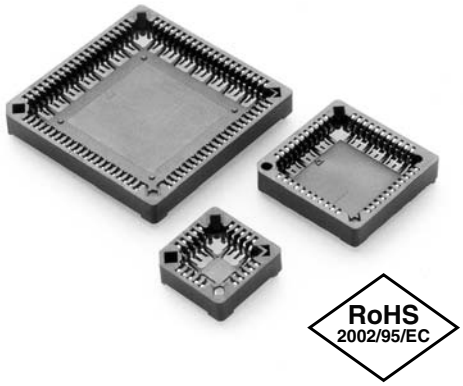


For Electrical, Mechanical & Enviromental Data, See pg. 113

PCB LAYOUT FOR SURFACE MOUNT

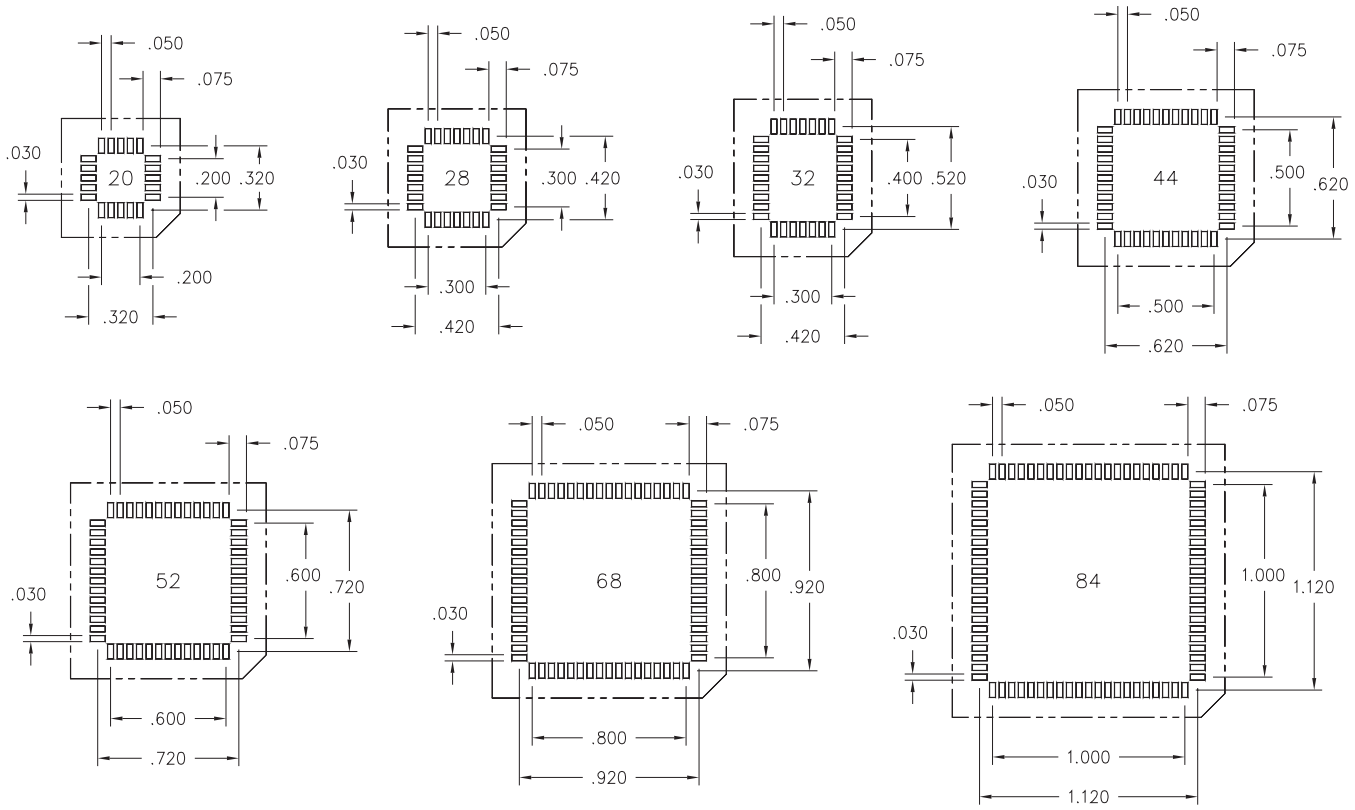


* RECTANGULAR

| No. of Contacts | Ordering Information | - A1 - | - A2 - | - C1 - | - C2 - | - E - | - H - | Qty. per Tube | Tape Width mm | Qty. per Reel |
|---|---|---|---|---|---|---|---|---|---|---|
| 20 | 540-44-020-17-40000X | 0.200 | 0.200 | 0.585 | 0.585 | 0.657 | 0.180 | 34 | 24 | 490 |
| 28 | 540-44-028-17-40000X | 0.300 | 0.300 | 0.685 | 0.685 | 0.799 | 0.180 | 29 | 32 | 400 |
| 32* | 540-44-032-17-40000X* | 0.300 | 0.400 | 0.670 | 0.770 | 0.885 | 0.148 | 26 | 32 | 400 |
| 44 | 540-44-044-17-40000X | 0.500 | 0.500 | 0.885 | 0.885 | 1.082 | 0.180 | 22 | 44 | 250 |
| 52 | 540-44-052-17-40000X | 0.600 | 0.600 | 1.000 | 1.000 | 1.224 | 0.180 | 20 | 44 | 250 |
| 68 | 540-44-068-17-40000X | 0.800 | 0.800 | 1.202 | 1.202 | 1.507 | 0.180 | 16 | 44 | 220 |
| 84 | 540-44-084-17-40000X | 1.000 | 1.000 | 1.400 | 1.400 | 1.791 | 0.180 | 14 | 56 | 200 |

Packaging Codes: X = 0 (Tubes) / X = 4 (Tape & Reel)

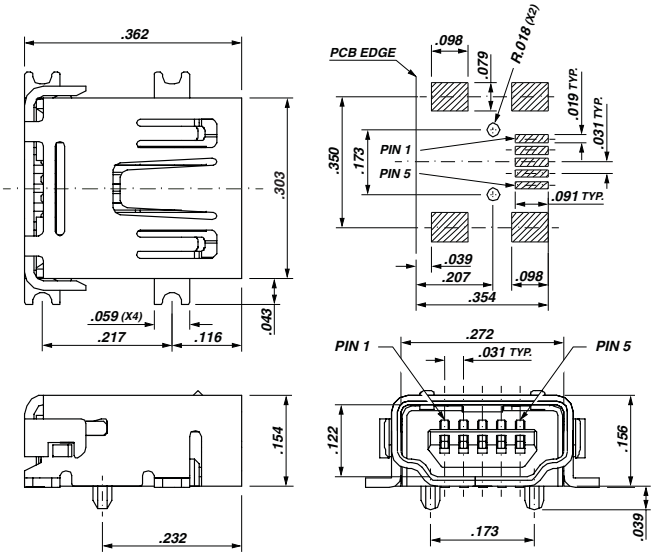


Fig. 1

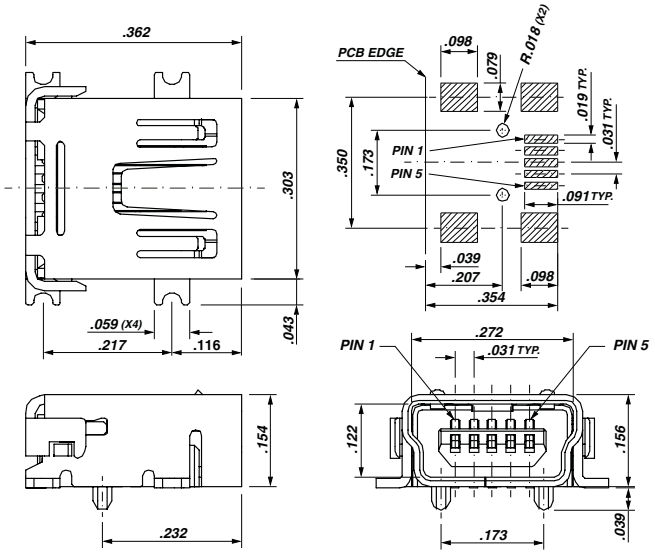


Fig. 2

RoHS
2002/95/EC

## Features

- Mini USB receptacles for surface mount.
- 5 Pin (one ID Pin), 0.8mm pitch, mini USB connector.
- Reduced mounting space.
- Fully Shielded.
- Fully compliant with current USB 2.0 specifications.
- Smaller and lighter than existing USB connectors for portable and handheld devices.
- Packaged on Tape & Reel - 700 parts per reel.

## Ordering Information:

**Figure 1:** Mini Type A Recep., Single,Surface Mount

**896-43-005-00-100001**

**Figure 2:** Mini Type B Recep., Single,Surface Mount

**897-43-005-00-100001**

## Specifications

**Materials:**
Terminals: Copper Alloy, Tin Plated
Contacts: Copper Alloy, 30 μ" Gold Plated
Casing & Shield: Stainless Steel
Insulator material: High temp. thermoplastic rated UL94V-0

**Ratings:**
Voltage: 30VAC (rms)
Current: 1A max. per contact for 30°C temperature rise
All housing materials rated for "lead-free" soldering up to 260ºC

**Electrical:**
Contact resistance: 50mΩ max.
Insulation resistance: 100MΩ min.
Dielectric withstanding voltage: 100VAC at sea level
Capacitance: 2pF max.

**Mechanical:**
Random vibration: No discontinuity >1μs per EIA 364-28, cond. V, letter A
Physical shock: No discontinuity >1μs per EIA 364-27, condition H
Durability: 5000 cycles min. per EIA 364-09
Mating force: 35 Newtons max. per EIA 364-13
Unmating force: Initial - 7 Newtons min. per EIA 364-13
After test - 3 Newtons min. per EIA 364-13
Cable Pull-out force per EIA 364-38

**Environmental:**
Thermal shock per EIA 364-32, condition I
Humidity per EIA 364-31, method III, condition A
Temperature life per EIA 364-17, condition 3, method A
Solderability per EIA 364-52, category 2

## Applications:

- **Cell phones**
- **Digital still cameras**
- **Digital video cameras**
- **PDAs**
- **MP3 Players**
- **Other portable and hand-held devices**

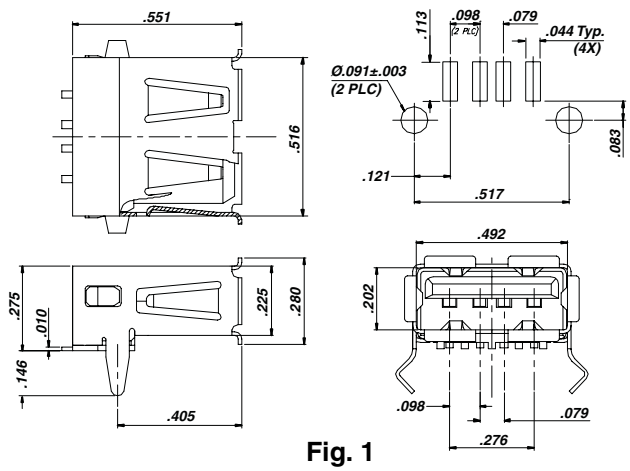


Fig. 1

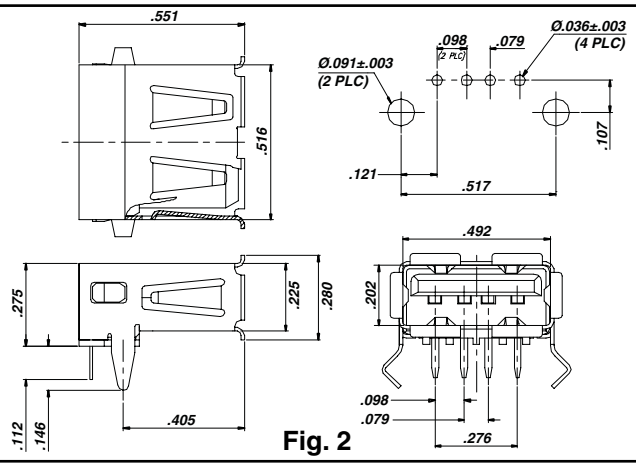


Fig. 2

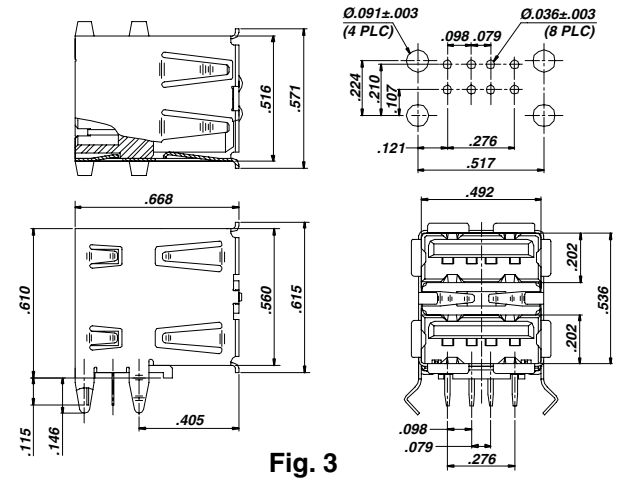


Fig. 3

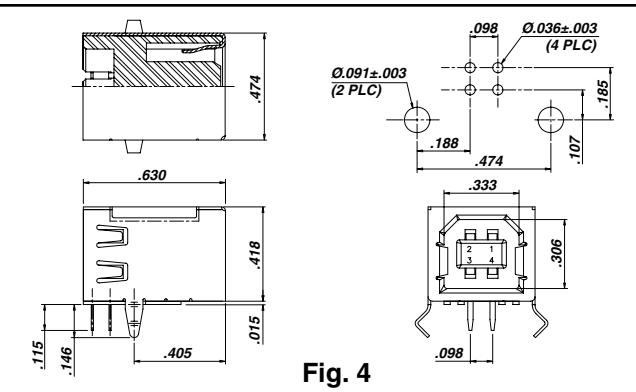


Fig. 4

RoHS
2002/95/EC

## Features

- USB receptacles for through-hole & surface mount.
- Plug retention tabs.
- Kinked locating legs for secure PCB retention.
- Fully Shielded.
- Fully compatible with USB 1.0 & 2.0 specifications.
- Passes 16MHz Signal Attentuation per ASTM-D-4566.
- Packaged in trays, 150 pieces per tray.

## Ordering Information

**Figure 1:** Type A Receptacle, Single, Surface Mount
**896-43-004-00-000000**

**Figure 2:** Type A Receptacle, Single, Through Hole
**896-43-004-90-000000**

**Figure 3:** Type A Receptacle, Double, Through Hole
**896-43-008-90-000000**

**Figure 4:** Type B Receptacle, Single,Through Hole
**897-43-004-90-000000**

## Specifications

**Materials:**
Terminals: Copper Alloy, Tin Plated
Contacts: Copper Alloy, 30 µ" Gold Plated
Casing & Shield: Stainless Steel
Insulator material: High temp. thermoplastic rated UL94V-0

**Ratings:**
Voltage: 30VAC (rms)
Current: 1A max. per contact for 30°C temperature rise
All housing materials rated for "lead-free" soldering up to 260ºC

**Electrical:**
Contact resistance: 30mΩ max.
Insulation resistance: 1000MΩ min.
Dielectric withstanding voltage: 750VAC at sea level
Capacitance: 2pF max.

**Mechanical:**
Random vibration: No discontinuity >1µs per EIA 364-28, cond. V, letter A
Physical shock: No discontinuity >1µs per EIA 364-27, condition H
Durability: 1500 cycles min. per EIA 364-09
Mating force: 35 Newtons max. per EIA 364-13
Unmating force: 10 Newtons min. per EIA 364-13

**Environmental:**
Thermal shock per EIA 364-32, condition I
Humidity per EIA 364-31, method II, condition A
Temperature life per EIA 364-17, condition 3, method A

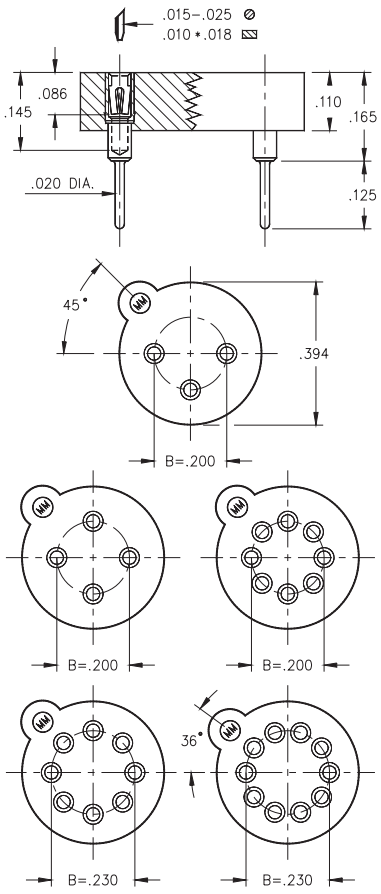


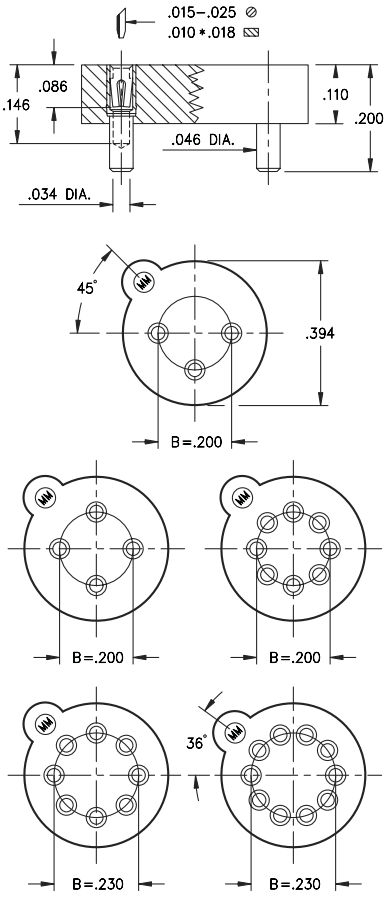


- Series 917 TO package sockets are available in 3, 4, 8 and 10 positions.
- Two 8 pin versions feature pin centers on .200" or .230" circle.
- Series 917_005 use MM #1802 pins, see page 140 for details. Receptacles use Hi-Rel, 4 finger #30 contact rated at 3 amps. See page 218 for details.
- Series 917_001 use MM #1701 pins, see page 140 for details. Receptacles use Hi-Rel, 4 finger #30 contact rated at 3 amps. See page 218 for details.
- Insulators are high temp. thermoplastic.

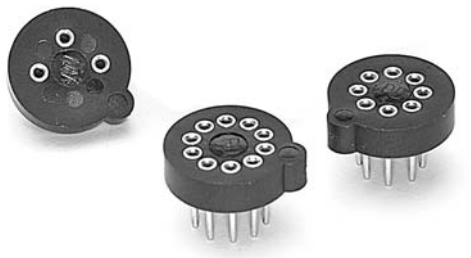

RoHS 2002/95/EC

## Ordering Information

### Transistor Sockets (Through-Hole Mount)

| Type | Circle Dia. | No. of Pins | Ordering Information |
|---|---|---|---|
| TO-5 | 0.200 | 3 | 917-XX-103-41-005000 |
| TO-5 | 0.200 | 4 | 917-XX-104-41-005000 |
| TO-5 | 0.200 | 8 | 917-XX-108-41-005000 |
| TO-100 | 0.230 | 8 | 917-XX-208-41-005000 |
| TO-100 | 0.230 | 10 | 917-XX-210-41-005000 |

### Transistor Sockets (Surface Mount)

| Type | Circle Dia. | No. of Pins | Ordering Information |
|---|---|---|---|
| TO-5 | 0.200 | 3 | 917-43-103-41-001000 |
| TO-5 | 0.200 | 4 | 917-43-104-41-001000 |
| TO-5 | 0.200 | 8 | 917-43-108-41-001000 |
| TO-100 | 0.230 | 8 | 917-43-208-41-001000 |
| TO-100 | 0.230 | 10 | 917-43-210-41-001000 |

*For Electrical, Mechanical & Enviromental Data, See pg. 4*

*XX=Plating Code See Below*

*For RoHS compliance select ◇ plating code.*

| SPECIFY PLATING CODE XX= | | | 93 | | | 43◇ | |
|---|---|---|---|---|---|---|---|
| Sleeve (Pin) | | | 200µ" Sn/Pb | | | 200µ"Sn | |
| Contact (Clip) | | | 30 µ" Au | | | 30 µ" Au | |

# MISCELLANEOUS SOCKETS
## Right Angle Socket
## Test Point



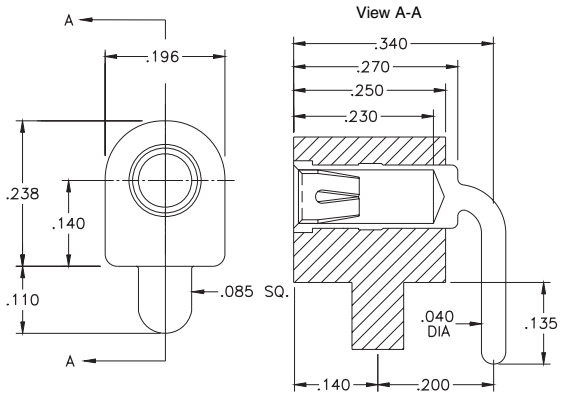


- Available to accept 3 pin sizes: 1, 1.5, & 2mm.
- Uses Hi-Temp PCT polyester insulator.
- Standard Insulator color is black.

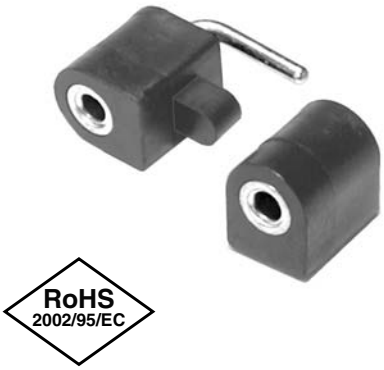


| Pin Size | Ordering Information |
|---|---|
| 1.0mm | 395-XX-101-34-34X000 |
| 1.5mm | 395-XX-101-03-38X000 |
| 2.0mm | 395-XX-101-07-35X000 |

Insulator Color Options
X= 0 - Black

RECOMMENDED MOUNTING HOLES

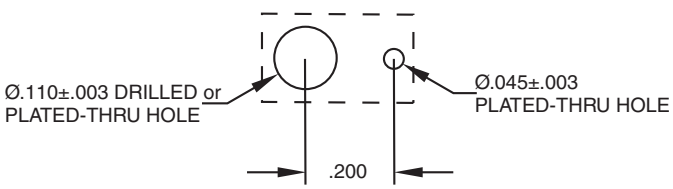


*For Electrical, Mechanical & Enviromental Data, See pg. 4*

*XX=Plating Code See Below*

*For RoHS compliance select ◇ plating code.*

| SPECIFY PLATING CODE XX= | 13◇ | | 93 | | | | |
|---|---|---|---|---|---|---|---|
| Sleeve (Pin) | 10µ" Au | | 200µ" Sn/Pb | | | | |
| Contact (Clip) | 30µ" Au | | 30µ" Au | | | | |

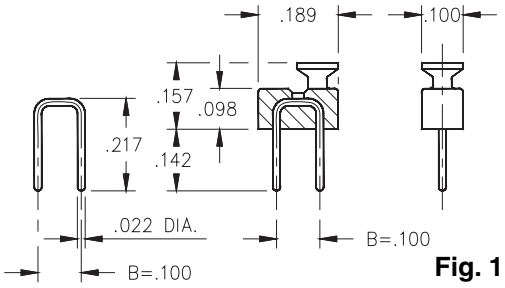


Fig. 1

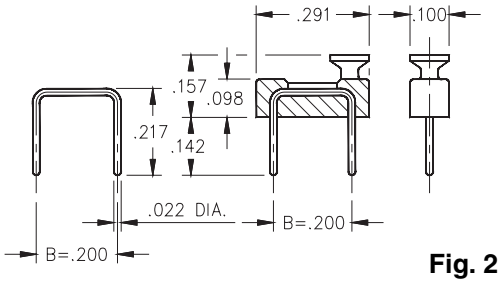


Fig. 2

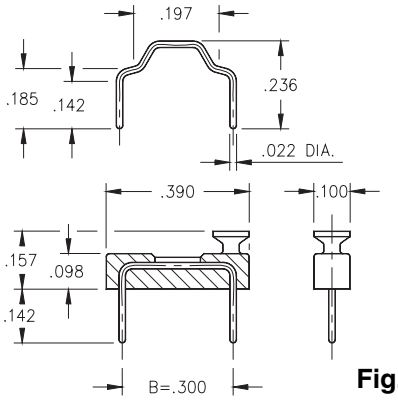


Fig. 3

- Male shorting jumpers are available with or without insulator and have .022" diameter pins with .100", .200" or .300" center spacing.
- Insulator materials are not high temperature.

*For Electrical, Mechanical & Enviromental Data, See pg. 4*

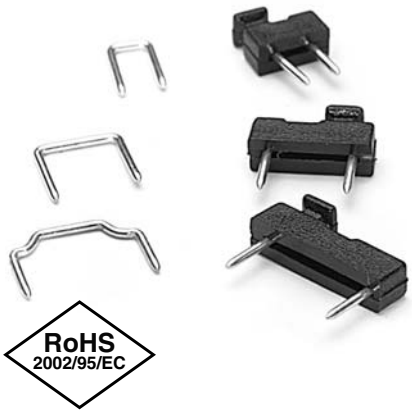


## Ordering Information

| | Male Shorting Jumper .100" Spacing | |
|---|---|---|
| **Fig. 1** | **Color / Style** | **Plating 10µ" Au ◇** |
| | Black | 999-11-210-10-000000 |
| | Not Insulated | 999-11-110-10-000000 |
| | **Male Shorting Jumper .200" Spacing** | |
| **Fig. 2** | **Color / Style** | **Plating 10µ" Au ◇** |
| | Black | 999-11-220-10-000000 |
| | Not Insulated | 999-11-112-10-000000 |
| | **Male Shorting Jumper .300" Spacing** | |
| **Fig. 3** | **Color / Style** | **Plating 10µ" Au ◇** |
| | Black | 999-11-230-10-000000 |
| | Not Insulated | 999-11-113-10-000000 |

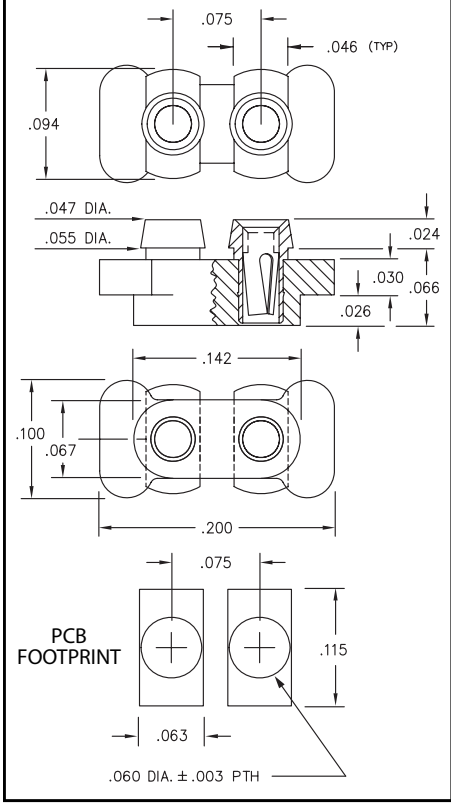


- Series 388 microphone socket is a bottom entry socket for microphones having Ø.018" pins on .075" centers.
- Designed to be surface mount and intrusive reflow soldered.
- Insulator is high temp. Nylon 46, rated UL 94 V-0.
- Series 388 use MM #8874 pins. See page 130 for details.

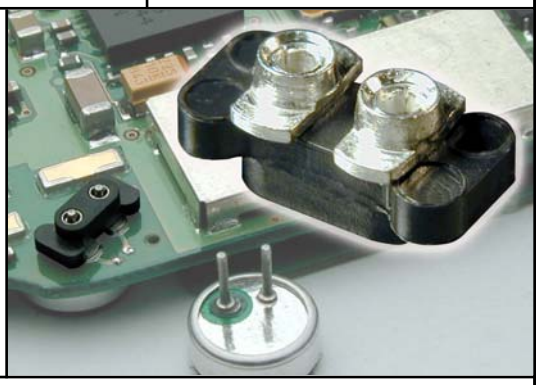

## Microphone Socket

## Ordering Information

*XX=Plating Code See Below*

**388-XX-102-11-740800** (Discrete socket)

→ **Plating Code**

**388-XX-102-11-740799**

(Supplied on 12mm wide carrier tape per EIA-481: 6,500 per 13" reel)

| SPECIFY PLATING CODE XX= | | | | 99 | | | 44◇ |
|---|---|---|---|---|---|---|---|
| Sleeve (Pin) | | | | 200µ"Sn/Pb | | | 200µ"Sn |
| Contact (Clip) | | | | 200µ"Sn/Pb | | | 200µ"Sn |

# THE BASIC RECEPTACLE

The basic conducting element used in printed circuit board (PCB) connections is the pin receptacle. The Mill-Max pin receptacle is typically used to make devices on the PC board pluggable while maintaining a low profile, or as the contact in a cable assembly. The machined shell or housing of pin receptacles is available in various styles depending on the application. The terminal end of pin receptacles has many variations: a round solder tail, a press-fit tail, a surface mount tail, crimp tail, solder-cup tail, swage tail or no tail.

Inside every Mill-Max receptacle is a contact clip. A contact clip is a conductive, multi-finger, progressive-die stamping that engages, scores and holds the mated pin, making an electrical and gas-tight connection at 3, 4 or 6 points of contact (depending upon the selected contact).

Mill-Max currently offers 34 styles of contacts to engage pins from .008" to .102" in diameter. A convenient contact selector chart is located on page 214 showing the different specifications of each contact.

Pin receptacles can be utilized as discrete connectors for the plugging and unplugging of components on pc boards. They can be utilized individually or in random arrays where the usage is small. They can be handled and loaded manually in preparation for soldering or, with a different style shell, for press-fitting. When a customer requires volume placement of Mill-Max receptacles, socket carriers or tape and reel packaging are tremendous labor-saving solutions for our customer.

In addition to the products found on the following pages, Mill-Max offers the following stock materials and diameters available for manufacture:

BRASS Alloy 360, 1/2 hard: .062/.072/.078/.093/.125/.156/.187/.250 diameters
BRASS Alloy 360, 1/4 hard: .072/.078 diameters
BRASS TUBING: .072 O.D.x.020 I.D./ .072 O.D.x.025 I.D.
PHOSPHOR BRONZE Alloy 544 .062/.072/.078 diameters
TELLURIUM COPPER Alloy 145 .079/.093/.125/.156 diameters

Mill-Max will gladly quote application specific products. Please complete the specification sheet on page 213 or send us your own drawings. We assure you of a fast response.

# PIN RECEPTACLES
## for .008" - .013" diameter pins (#04 contact) and .012" - .017" diameter pins (#10 contact) (see specific contact range on page 216)

## 8210

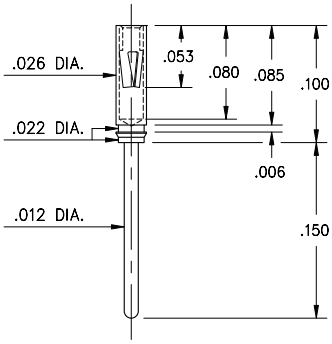


**8210-0-15-15-04-27-04-0**
Press-fit in .024/.027 stepped hole

## 0464

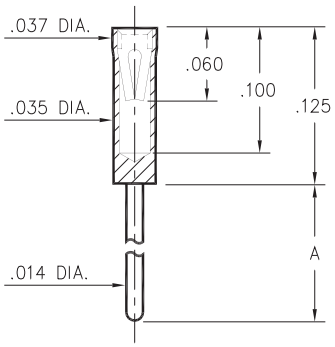


| Basic Part Number | Length A |
|---|---|
| 0464-0 | .125 |
| 0464-1 | .250 |

**0464-X-15-XX-10-XX-04-0**
Solder mount in .016 min. mounting hole

## 9225

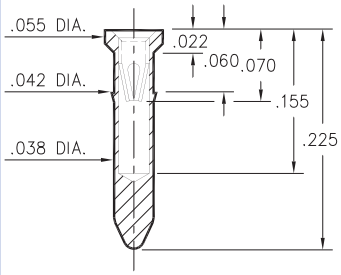


**9225-0-15-XX-10-XX-10-0**
Press-fit in .039 mounting hole

## 0529

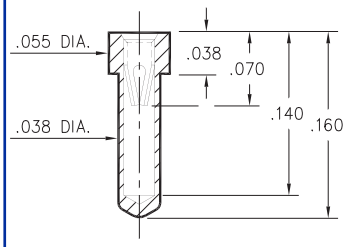


**0529-0-15-XX-10-XX-10-0**
.040 min. mounting hole

## 8947

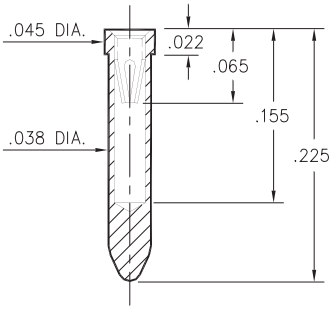


**8947-0-15-XX-10-XX-10-0**
Solder mount in .040 min. mounting hole

## SPECIFICATIONS

**SHELL MATERIAL:**
Brass Alloy 360, 1/2 Hard

**CONTACT MATERIAL:**
Beryllium Copper Alloy 172, HT

**DIMENSION IN INCHES**
**TOLERANCES ON:**
LENGTHS: ±.005
DIAMETERS: ±.002
ANGLES: ± 2°

**ORDER CODE: XXXX - X - XX - XX - XX - XX - XX - 0**

**BASIC PART #**

**SPECIFY SHELL FINISH:**
**01** 200μ" TIN/LEAD OVER NICKEL
◇ **80** 200μ" TIN OVER NICKEL (RoHS)
◇ **15** 10μ" GOLD OVER NICKEL (RoHS)

**SPECIFY CONTACT FINISH:**
**02** 100μ" TIN/LEAD OVER NICKEL
◇ **84** 100μ" TIN OVER NICKEL (RoHS)
◇ **27** 30μ" GOLD OVER NICKEL (RoHS)

**SELECT CONTACT**
**#04 or #10** CONTACT (DATA ON PAGE 216)
(CONTACTS #04 & #10 NOT INTERCHANGEABLE)

RoHS 2002/95/EC

# PIN RECEPTACLES
## for .015" - .020" diameter pins (#11 contact) and .015" - .022" diameter pins (#21 contact) (see specific contact range on page 217)

## 0548

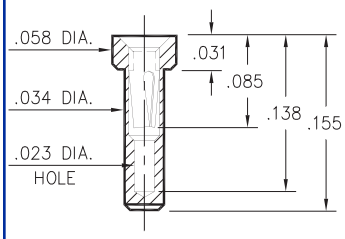


**0548-0-15-XX-21-XX-10-0**
Solder mount in .036 min. mounting hole

## 8975

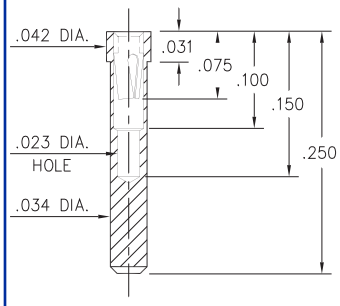


**8975-0-15-XX-21-XX-10-0**
Solder mount in .036 min. mounting hole

## 3016

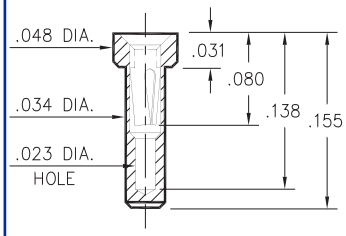


**3016-0-15-XX-21-XX-10-0**
Solder mount in .036 min. mounting hole

## 9548

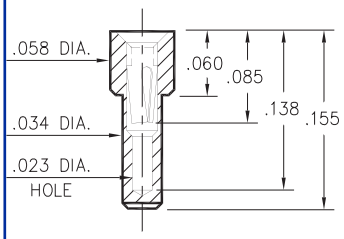


**9548-0-15-XX-21-XX-10-0**
Solder mount in .036 min. mounting hole

## 8637

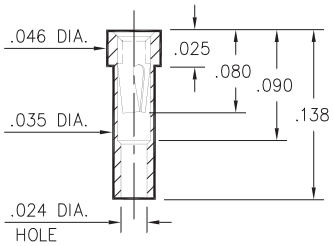


**8637-0-15-XX-21-XX-10-0**
Solder mount in .037 min. mounting hole

## 1407

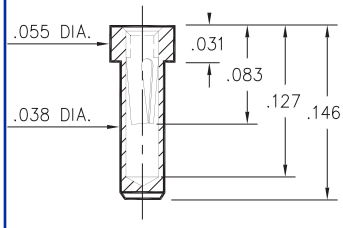


**1407-0-15-XX-11-XX-10-0**
Solder mount in .040 min. mounting hole

## 0553/8553

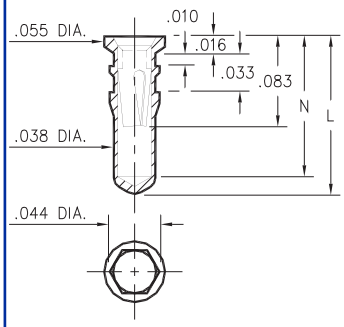


| Basic Part Number | Length L | Depth N |
|---|---|---|
| 0553-1 | .140 | .124 |
| 0553-2 | .170 | .154 |
| 0553-3 | .282 | .266 |
| 8553-0 | .245 | .229 |

**X553-X-15-XX-X1-XX-10-0**
Hex press-fit in .041 plated thru hole

## 0566

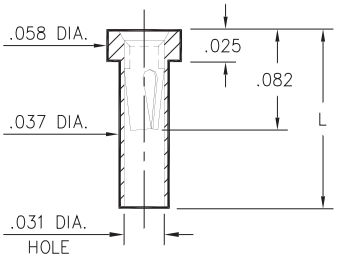


| Basic Part Number | Length L |
|---|---|
| 0566-1 | .083 |
| 0566-2 | .138 |

**0566-X-15-XX-21-XX-10-0**
Solder mount in .039 min. mounting hole

## 0442

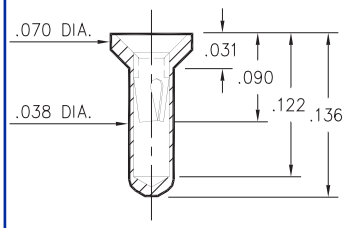


**0442-0-15-XX-11-XX-10-0**
Solder mount in .040 min. mounting hole

## 0554

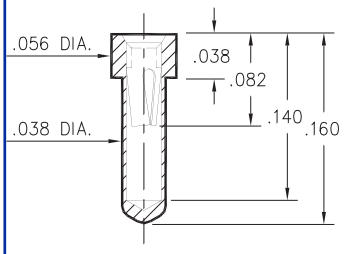


**0554-0-15-XX-21-XX-10-0**
Solder mount in .040 min. mounting hole

## SPECIFICATIONS

**SHELL MATERIAL:**
Brass Alloy 360, 1/2 Hard

**CONTACT MATERIAL:**
Beryllium Copper Alloy 172, HT

**DIMENSION IN INCHES**
**TOLERANCES ON:**
LENGTHS: ±.005
DIAMETERS: ±.002
ANGLES: ± 2°

**ORDER CODE: XXXX - X - 15 - XX - XX - XX - 10 - 0**

**BASIC PART #**

**SPECIFY SHELL FINISH:**
**01** 200μ" TIN/LEAD OVER NICKEL
◇ **80** 200μ" TIN OVER NICKEL (RoHS)
◇ **15** 10μ" GOLD OVER NICKEL (RoHS)

**SPECIFY CONTACT FINISH:**
**02** 100μ" TIN/LEAD OVER NICKEL
◇ **84** 100μ" TIN OVER NICKEL (RoHS)
◇ **27** 30μ" GOLD OVER NICKEL (RoHS)

RoHS 2002/95/EC

**SELECT CONTACT**
**#11 or #21** CONTACT (DATA ON PAGE 217)

# PIN RECEPTACLES

**for .015" - .018" diameter pins (#09 contact)**
**for .015" - .020" diameter pins (#11 contact)**
**and .015" - .022" diameter pins (#21 contact)**
**(see specific contact range on pages 216 & 217)**

## 0467

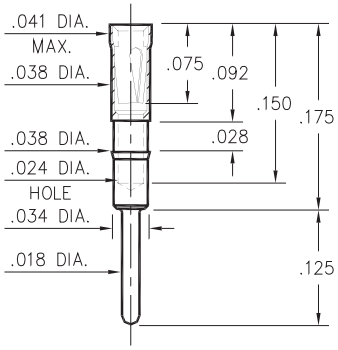


**0467-0-15-XX-21-XX-04-0**
Press-fit in .037 mounting hole

## 0552

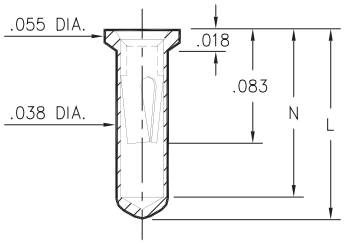


| Basic Part Number | Length L | Depth N |
|---|---|---|
| 0552-1 | .136 | .120 |
| 0552-2 | .170 | .150 |

**0552-X-15-XX-X1-XX-10-0**
Solder mount in .040 min. mounting hole
Also available on 16mm wide carrier tape: 1,500 parts per 13" reel.
Order as: 0552-X-57-XX-X1-XX-10-0

## 5522

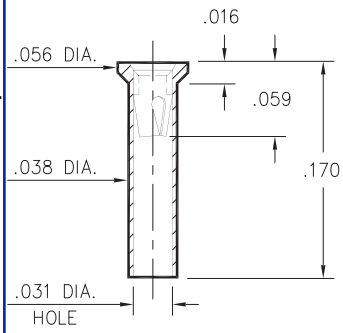


**5522-0-15-XX-09-XX-10-0**
Solder mount in .040 min. mounting hole

## 0569

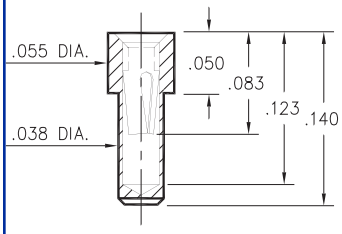


**0569-0-15-XX-X1-XX-10-0**
Solder mount in .040 min mounting hole

## 6023

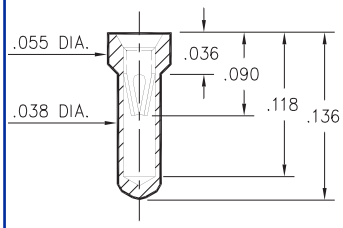


**6023-0-15-XX-21-XX-10-0**
Solder mount in .040 min mounting hole

## 6214

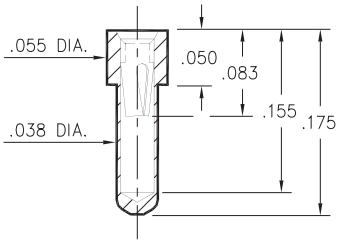


**6214-0-15-XX-21-XX-10-0**
Solder mount in .040 min mounting hole

## 2086

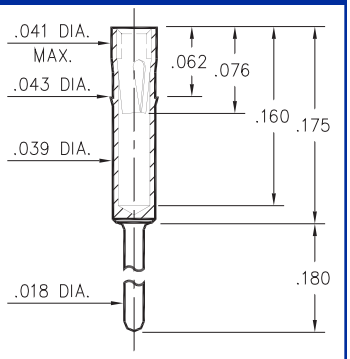


**2086-0-15-XX-21-XX-04-0**
Press-fit in .040 mounting hole

## 0461

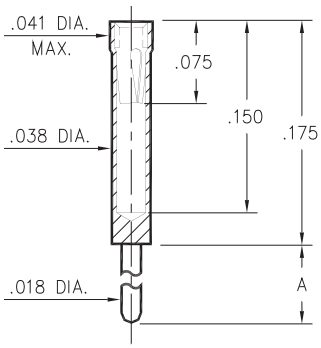


| Basic Part Number | Length A |
|---|---|
| 0461-0 | .400 |
| 0461-1 | .275 |
| 0461-2 | .180 |
| 0461-3 | .125 |
| 0461-4 | .060 |
| 0461-5 | .440 |

**0461-X-15-XX-X1-XX-04-0**
Solder mount in .020 min. mounting hole

## 8579

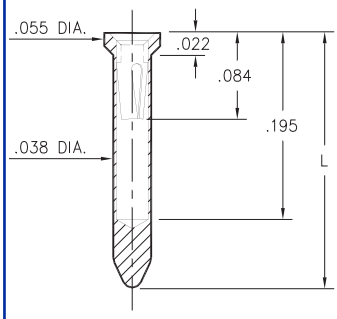


| Basic Part Number | Length L |
|---|---|
| 8579-0 | .234 |
| 8579-1 | .295 |

**8579-0-15-XX-X1-XX-10-0**
Solder mount in .040 min mounting hole

## SPECIFICATIONS

**SHELL MATERIAL:**
Brass Alloy 360, 1/2 Hard

**CONTACT MATERIAL:**
Beryllium Copper Alloy 172, HT

**DIMENSION IN INCHES**
**TOLERANCES ON:**
LENGTHS: ±.005
DIAMETERS: ±.002
ANGLES: ± 2°

**ORDER CODE: XXXX - X - 15 - XX - XX - XX - XX - 0**

**BASIC PART #**

**SPECIFY SHELL FINISH:**
**01** 200μ" TIN/LEAD OVER NICKEL
◇ **80** 200μ" TIN OVER NICKEL (RoHS)
◇ **15** 10μ" GOLD OVER NICKEL (RoHS)

**SPECIFY CONTACT FINISH:**
**02** 100μ" TIN/LEAD OVER NICKEL
◇ **84** 100μ" TIN OVER NICKEL (RoHS)
◇ **27** 30μ" GOLD OVER NICKEL (RoHS)

RoHS 2002/95/EC

**SELECT CONTACT**
**#09, #11 or #21** CONTACT (DATA ON PAGE 217)

# PIN RECEPTACLES
## for .015" - .020" diameter pins (#11 contact) and .015" - .022" diameter pins (#21 contact) (see specific contact range on page 217)

### 8467

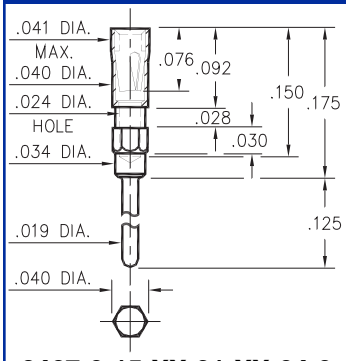


**8467-0-15-XX-21-XX-04-0**
Hex press-fit in .036 plated thru hole

### 6192

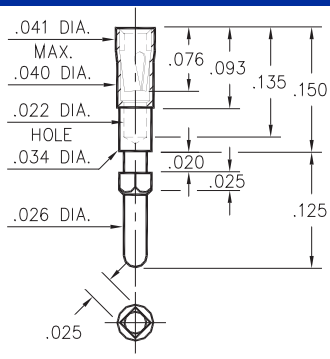


**6192-0-15-XX-21-XX-04-0**
Square press-fit in .032 plated thru hole

### 9553

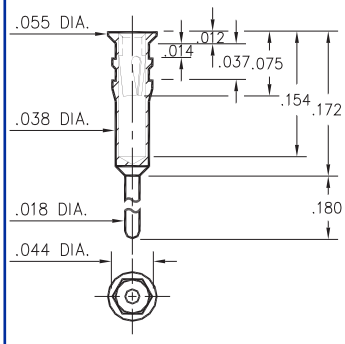


**9553-0-15-XX-X1-XX-04-0**
Hex press-fit in .041 plated thru hole

### 5531

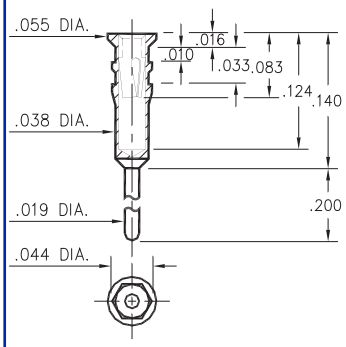


**5531-0-15-XX-21-XX-10-0**
Hex press-fit in .041 plated thru hole

### 7553

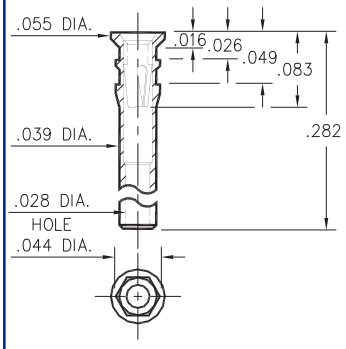


**7553-0-15-XX-11-XX-10-0**
Hex press-fit in .041 plated thru hole

### 9407

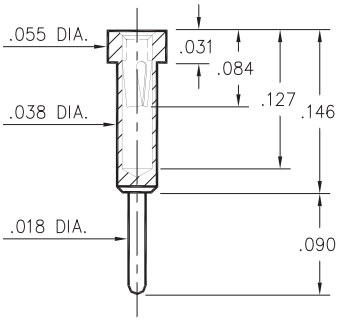


**9407-0-15-XX-11-XX-10-0**
Solder mount in .040 min. mounting hole

### 9462

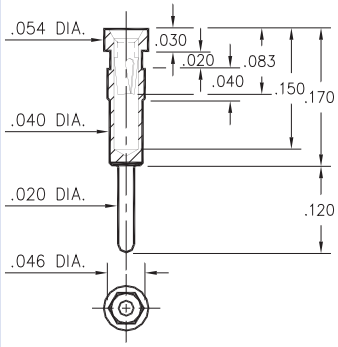


**9462-0-15-XX-21-XX-04-0**
Hex press-fit in .043 plated thru hole

### 1147

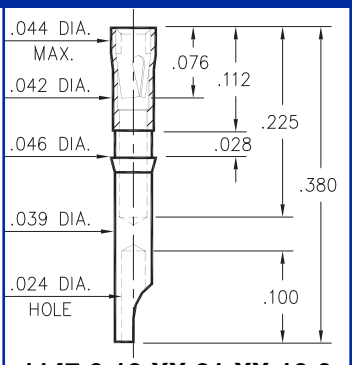


**1147-0-18-XX-21-XX-10-0**
Press-fit in .043 min. mounting hole

### 3061

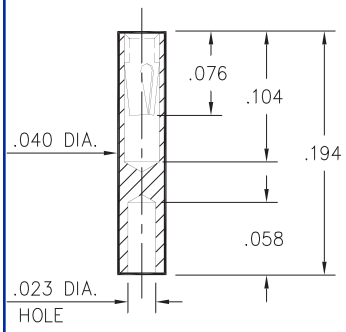


**3061-0-19-XX-21-XX-10-0**
Wire Termination

### 0579

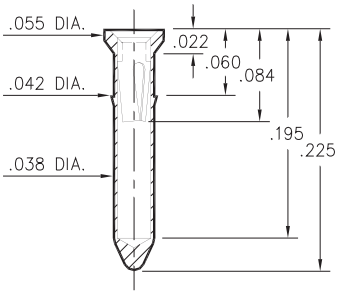


**0579-0-15-XX-X1-XX-10-0**
Press-fit in .040 mounting hole

### 8874

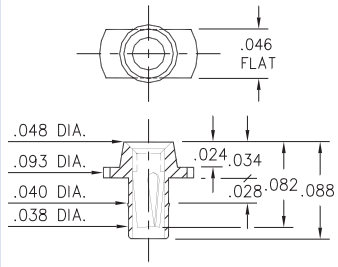


**8874-0-15-XX-11-XX-10-0**
Bottom entry
Surface mount

### 0613

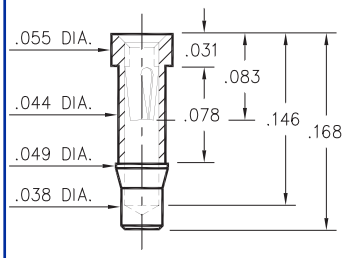


**0613-0-15-XX-21-XX-10-0**
Press-fit in .047 mounting hole

## SPECIFICATIONS

**SHELL MATERIAL:**
Brass Alloy 360, 1/2 Hard

**CONTACT MATERIAL:**
Beryllium Copper Alloy 172, HT

**DIMENSION IN INCHES**
**TOLERANCES ON:**
LENGTHS: ±.005
DIAMETERS: ±.002
ANGLES: ± 2°

**ORDER CODE: XXXX - X - 1X - XX - XX - XX - XX - 0**

**BASIC PART #**

**SPECIFY SHELL FINISH:**
**01** 200μ" TIN/LEAD OVER NICKEL
◇ **80** 200μ" TIN OVER NICKEL (RoHS)
◇ **15** 10μ" GOLD OVER NICKEL (RoHS)

**SPECIFY CONTACT FINISH:**
**02** 100μ" TIN/LEAD OVER NICKEL
◇ **84** 100μ" TIN OVER NICKEL (RoHS)
◇ **27** 30μ" GOLD OVER NICKEL (RoHS)

RoHS 2002/95/EC

**SELECT CONTACT**
**#11 or #21** CONTACT (DATA ON PAGE 217)

# PIN RECEPTACLES
## for .015" - .020" diameter pins (#11 contact) and .015" - .022" diameter pins (#05 & #21 contacts)
(see specific contact range on page 217)

## 0489

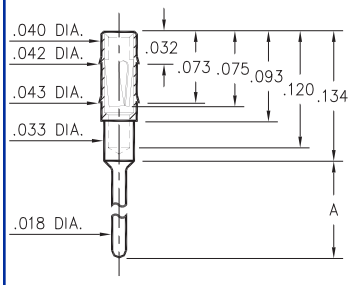


| Basic Part Number | Length A |
|---|---|
| 0489-0 | .102 |
| 0489-1 | .199 |
| 0489-2 | .299 |

**0489-X-15-XX-11-XX-04-0**
Press-fit in .041 mounting hole.

## 0463

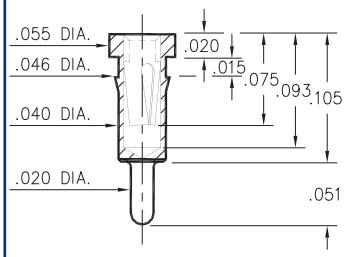


**0463-0-15-XX-21-XX-04-0**
Press-fit in .043 mounting hole.
shell is Phos. Br. Alloy 544 (B2)

## 0466

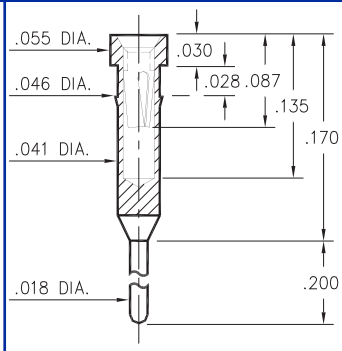


**0466-0-15-XX-21-XX-04-0**
Press-fit in .043 mounting hole.
shell is Phos. Br. Alloy 544 (B2)

## 7491

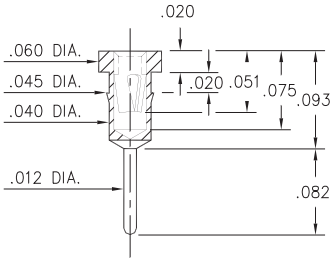


**7491-0-15-XX-X1-XX-04-0**
Press-fit in .042 mounting hole

## 0462

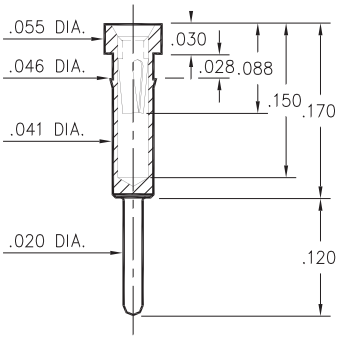


**0462-0-15-XX-X1-XX-04-0**
Press-fit in .043 mounting hole

## 0560

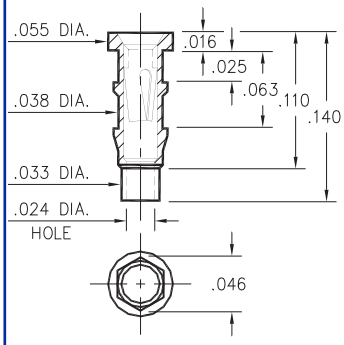


**0560-0-15-XX-11-XX-10-0**
Hex press-fit in .043 plated thru hole

## 5552

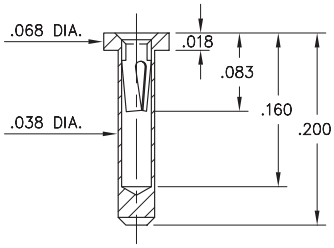


**5552-0-15-XX-05-XX-10-0**
Solder mount in .040 min. mounting hole

## 4890

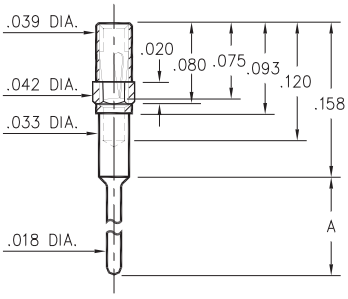


| Basic Part Number | Length A |
|---|---|
| 4890-0 | .102 |
| 4890-1 | .199 |
| 4890-2 | .299 |

**4890-X-15-XX-11-XX-04-0**
Octagonal press-fit in .041 mounting hole.

## SPECIFICATIONS

**SHELL MATERIAL:**
Brass Alloy 360, 1/2 Hard

**CONTACT MATERIAL:**
Beryllium Copper Alloy 172, HT

**DIMENSION IN INCHES**
**TOLERANCES ON:**
LENGTHS: ±.005
DIAMETERS: ±.002
ANGLES: ± 2°

**ORDER CODE: XXXX - X - 1X - XX - XX - XX - XX - 0**

**BASIC PART #**

**SPECIFY SHELL FINISH:**
**01** 200μ" TIN/LEAD OVER NICKEL
◇ **80** 200μ" TIN OVER NICKEL (RoHS)
◇ **15** 10μ" GOLD OVER NICKEL (RoHS)

**SPECIFY CONTACT FINISH:**
**02** 100μ" TIN/LEAD OVER NICKEL
◇ **84** 100μ" TIN OVER NICKEL (RoHS)
◇ **27** 30μ" GOLD OVER NICKEL (RoHS)

RoHS 2002/95/EC

**SELECT CONTACT**
**#05, #11 or #21** CONTACT (DATA ON PAGE 217)

## 0512

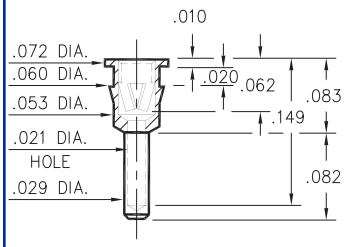


**0512-0-15-XX-12-XX-04-0**
Press-fit in .057 mounting hole

## 0703

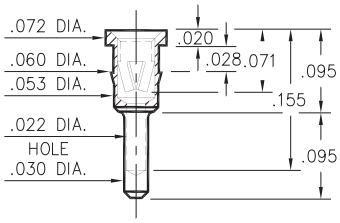


**0703-0-15-XX-12-XX-04-0**
Press-fit in .057 mounting hole

## 0574

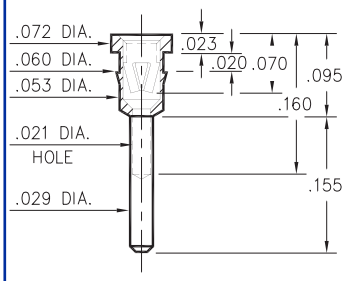


**0574-0-15-XX-12-XX-04-0**
Press-fit in .057 mounting hole

## 0468

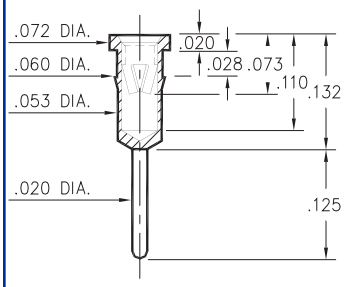


**0468-0-15-XX-12-XX-04-0**
Press-fit in .057 mounting hole

## 0550

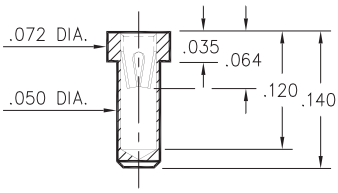


**0550-0-15-XX-22-XX-10-0**
Solder mount in .052 min.
mounting hole

## 0671

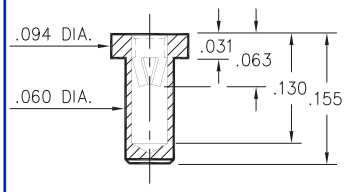


**0671-0-15-XX-12-XX-10-0**
Solder mount in .063 min.
mounting hole

## 0707

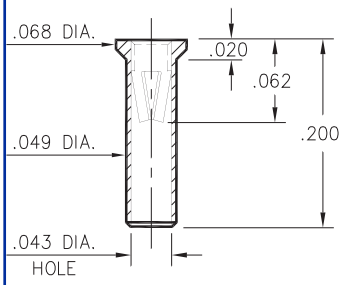


**0707-0-15-XX-12-XX-10-0**
Solder mount in .051 min.
mounting hole

## 5739

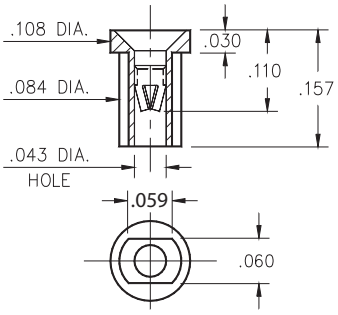


**5739-0-18-XX-12-XX-10-0**
Surface mount
Also available on 16mm wide carrier tape: 3,000 parts per 13" reel.
Order as: 5739-0-58-XX-12-XX-10-0

## 8894

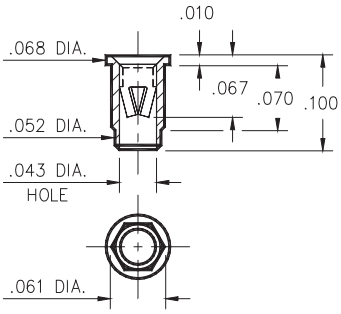


**8894-0-15-XX-12-XX-10-0**
Hex press-fit in .059 plated
thru hole

## 1534

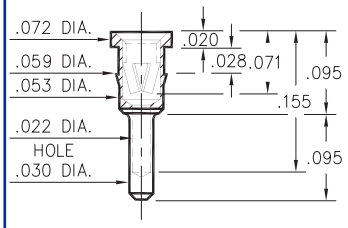


**1534-0-15-XX-12-XX-04-0**
Press-fit in .056 mounting hole

## SPECIFICATIONS

**SHELL MATERIAL:**
Brass Alloy 360, 1/2 Hard

**CONTACT MATERIAL:**
Beryllium Copper Alloy 172, HT

**DIMENSION IN INCHES**
**TOLERANCES ON:**
LENGTHS: ±.005
DIAMETERS: ±.002
ANGLES: ± 2°

**ORDER CODE: XXXX - X - 1X - XX - XX - XX - XX - 0**

**BASIC PART #**

**SPECIFY SHELL FINISH:**
**01** 200μ" TIN/LEAD OVER NICKEL
◇ **80** 200μ" TIN OVER NICKEL (RoHS)
◇ **15** 10μ" GOLD OVER NICKEL (RoHS)

**SPECIFY CONTACT FINISH:**
**02** 100μ" TIN/LEAD OVER NICKEL
◇ **84** 100μ" TIN OVER NICKEL (RoHS)
◇ **27** 30μ" GOLD OVER NICKEL (RoHS)

RoHS 2002/95/EC

**SELECT CONTACT**
**#12 or #22** CONTACT (DATA ON PAGE 218)

## 0501

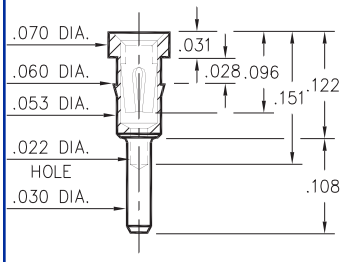


**0501-0-15-XX-30-XX-04-0**
Press-fit in .057 mounting hole

## 8427

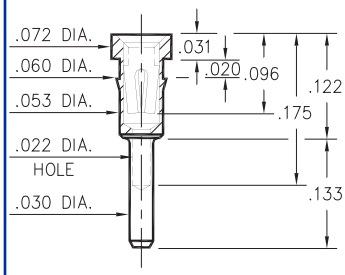


**8427-0-15-XX-30-XX-04-0**
Press-fit in .057 mounting hole

## 1434

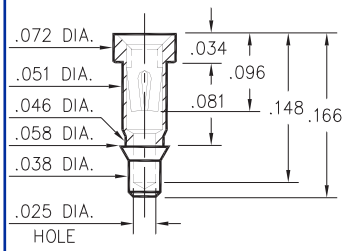


**1434-0-15-XX-30-XX-10-0**
Press-fit in .055 mounting hole

## 9970

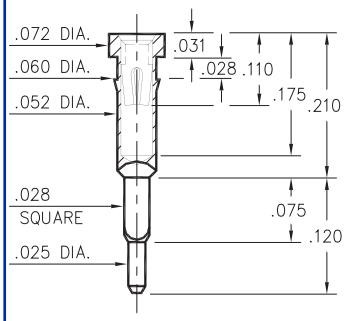


**9970-0-15-XX-30-XX-04-0**
Square press-fit for .032 ±.002 plated thru hole

## 5970

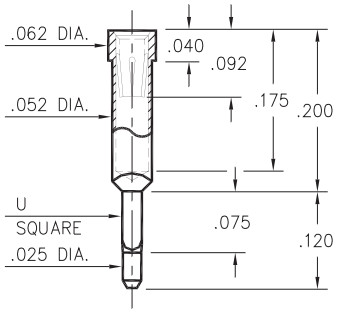


| Basic Part Number | U Square | Mounting Hole |
|---|---|---|
| 5970-1 | .028 | .032 |
| 5970-2 | .034 | .039 |

**5970-X-15-XX-32-XX-04-0**
Square press-fit for .032 or .039 ±.002 plated thru hole

## 0477/0478

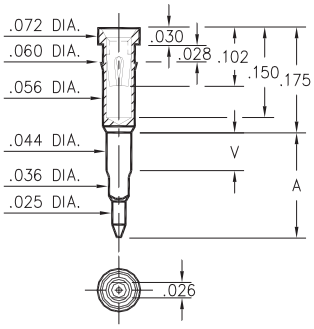


| Basic Part Number | Board Thick-ness | Length V | Length A |
|---|---|---|---|
| 0477-0 | .062 | .075 | .175 |
| 0478-0 | .125 | .140 | .250 |

**047X-0-18-XX-30-XX-04-0**
Solderless press-fit in .038 +.003 / -.002 plated thru hole (use 1.1mm drill prior to plating)

## 4612

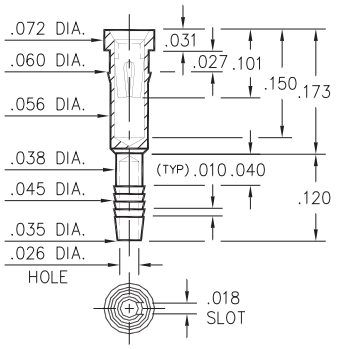


**4612-0-31-XX-30-XX-04-0**
Compliant press-fit in .040 ±.003 plated hole. For .060 → .100 thick board

## 4613

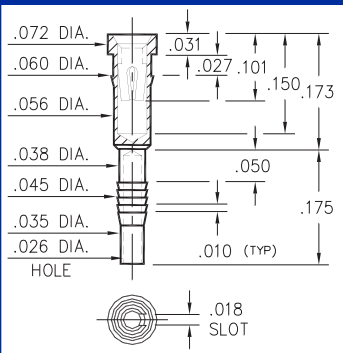


**4613-0-31-XX-30-XX-04-0**
Compliant press-fit in .040 ±.003 plated hole. For .090 → .130 thick board

## 0680

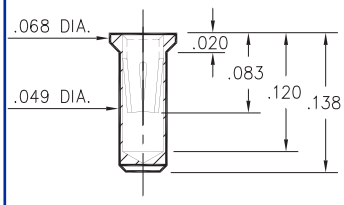


**0680-0-15-XX-32-XX-10-0**
Solder mount in .051 min. mounting hole

## 0149

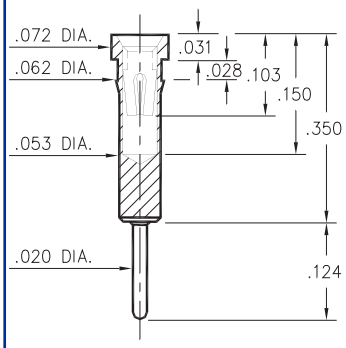


**0149-0-15-XX-30-XX-04-0**
Press-fit in .059 mounting hole

## SPECIFICATIONS

**SHELL MATERIAL:**
Brass Alloy 360, 1/2 Hard

**CONTACT MATERIAL:**
Beryllium Copper Alloy 172, HT

**DIMENSION IN INCHES**
**TOLERANCES ON:**
LENGTHS: ±.005
DIAMETERS: ±.002
ANGLES: ± 2°

**ORDER CODE: XXXX - X - XX - XX - XX - XX - XX - 0**

**BASIC PART #**

**SPECIFY SHELL FINISH:**
**01** 200μ" TIN/LEAD OVER NICKEL
◇ **80** 200μ" TIN OVER NICKEL (RoHS)
◇ **15** 10μ" GOLD OVER NICKEL (RoHS)

**SPECIFY CONTACT FINISH:**
**02** 100μ" TIN/LEAD OVER NICKEL
◇ **84** 100μ" TIN OVER NICKEL (RoHS)
◇ **27** 30μ" GOLD OVER NICKEL (RoHS)

RoHS 2002/95/EC

**SELECT CONTACT**
**#30 or #32** CONTACT (DATA ON PAGES 218 & 219)

# PIN RECEPTACLES
## for .015" - .025" diameter pins

## 0660

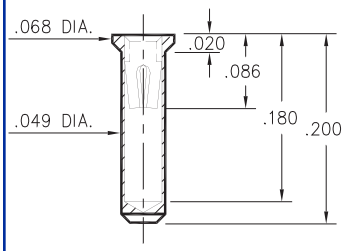


**0660-0-15-XX-30-XX-10-0**
Solder mount in .051 min. mounting hole

## 0677

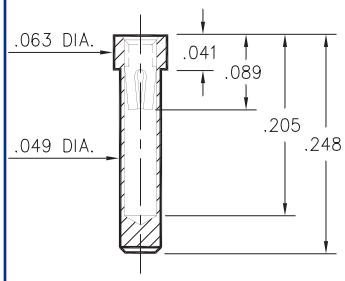


**0677-0-15-XX-30-XX-10-0**
Solder mount in .051 min. mounting hole

## 0555

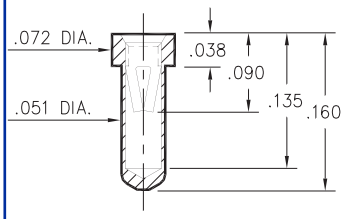


**0555-0-15-XX-20-XX-10-0**
Solder mount in .053 min. mounting hole

## 0558

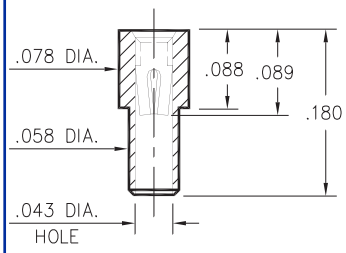


**0558-0-15-XX-30-XX-10-0**
Solder mount in .061 min. mounting hole

## 0675/0679

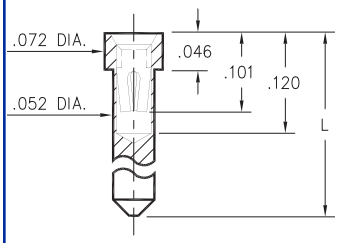


| Basic Part Number | Length L |
|---|---|
| 0675-0 | .145 |
| 0679-0 | .203 |

**067X-0-15-XX-30-XX-10-0**
Solder mount in .054 min. mounting hole

## 1065/1066/7065

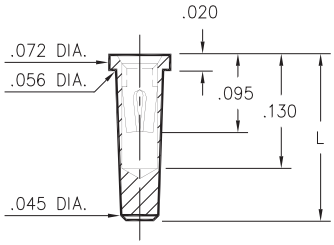


| Basic Part Number | Length L |
|---|---|
| 1065-0 | .190 |
| 1066-0 | .160 |
| 7065-0 | .181 |

**X06X-0-15-XX-30-XX-10-0**
Solder mount in .055 min. mounting hole

## 0682

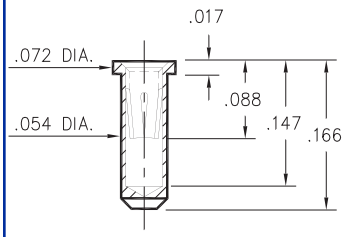


**0682-0-15-XX-32-XX-10-0**
Solder mount in .056 min. mounting hole

## 0667

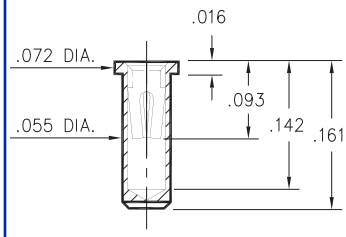


**0667-0-15-XX-30-XX-10-0**
Solder mount in .057 min. mounting hole

## 0665

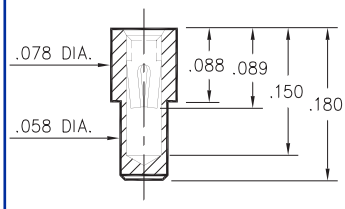


**0665-0-15-XX-30-XX-10-0**
Solder mount in .061 min. mounting hole

## 4286

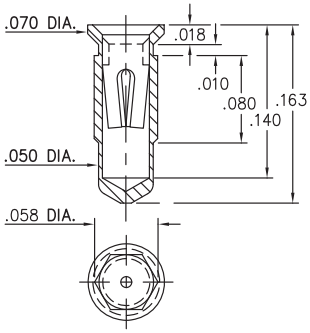


**4286-0-15-XX-30-XX-10-0**
Hex press-fit in .055 plated thru hole

## SPECIFICATIONS

**SHELL MATERIAL:**
Brass Alloy 360, 1/2 Hard

**CONTACT MATERIAL:**
Beryllium Copper Alloy 172, HT

**DIMENSION IN INCHES**
**TOLERANCES ON:**
LENGTHS: ±.005
DIAMETERS: ±.002
ANGLES: ±.002°

**ORDER CODE: XXXX - X - 15 - XX - XX - XX - 10 - 0**

**BASIC PART #**

**SPECIFY SHELL FINISH:**
**01** 200μ" TIN/LEAD OVER NICKEL
◇ **80** 200μ" TIN OVER NICKEL (RoHS)
◇ **15** 10μ" GOLD OVER NICKEL (RoHS)

**SPECIFY CONTACT FINISH:**
**02** 100μ" TIN/LEAD OVER NICKEL
◇ **84** 100μ" TIN OVER NICKEL (RoHS)
◇ **27** 30μ" GOLD OVER NICKEL (RoHS)

RoHS 2002/95/EC

**SELECT CONTACT**
**#30 or #32** CONTACT (DATA ON PAGES 218 & 219)

## 0669

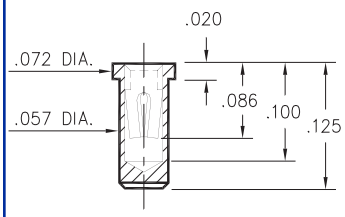


**0669-0-15-XX-30-XX-10-0**
Solder mount in .060 min. mounting hole

## 0670

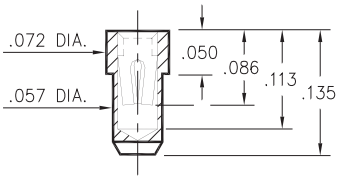


**0670-0-15-XX-30-XX-10-0**
Solder mount in .060 min. mounting hole

## 0673

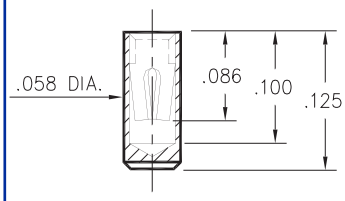


**0673-0-15-XX-30-XX-10-0**
Surface Mount

## 0666

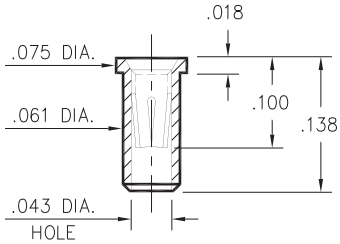


**0666-0-15-XX-32-XX-10-0**
Solder mount in .064 min. mounting hole
Also available on 24mm wide carrier tape: 1,500 parts per 13" reel.
Order as: 0666-0-57-XX-32-XX-10-0

## 0341

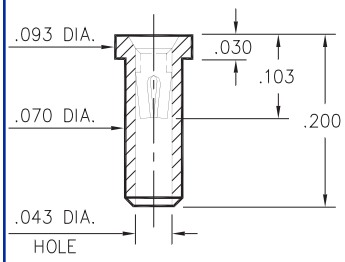


**0341-0-15-XX-30-XX-10-0**
Solder mount in .073 mounting hole

## 0252

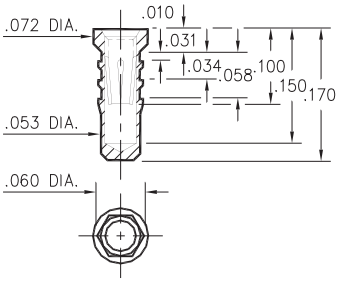


**0252-0-15-XX-32-XX-10-0**
Hex press-fit in .057 plated thru hole

## 0678

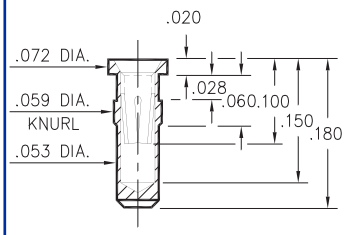


**0678-0-15-XX-32-XX-10-0**
Press-fit in .057 mounting hole

## 0676

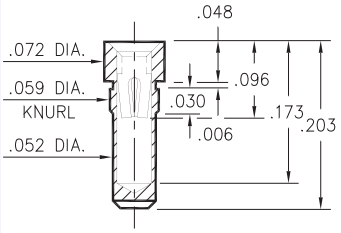


**0676-0-15-XX-30-XX-10-0**
Press-fit in .057 mounting hole

## 0697

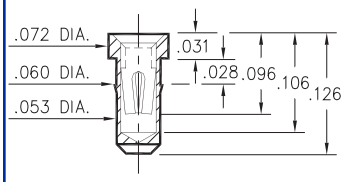


**0697-0-15-XX-30-XX-10-0**
Press-fit in .057 mounting hole

## 0668

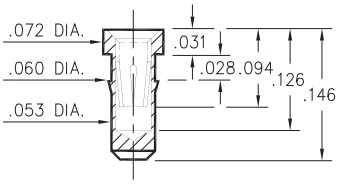


**0668-0-15-XX-30-XX-10-0**
Press-fit in .057 mounting hole

## 0253/1033

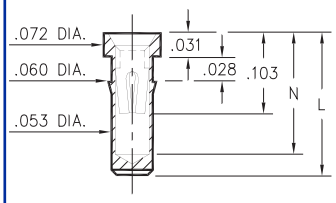


| Basic Part Number | Length L | Depth N |
|---|---|---|
| 0253-0 | .173 | .148 |
| 1033-0 | .203 | .162 |

**XXX3-0-15-XX-30-XX-10-0**
Press-fit in .057 mounting hole

## SPECIFICATIONS

**SHELL MATERIAL:**
Brass Alloy 360, 1/2 Hard

**CONTACT MATERIAL:**
Beryllium Copper Alloy 172, HT

**DIMENSION IN INCHES**
**TOLERANCES ON:**
LENGTHS: ±.005
DIAMETERS: ±.002
ANGLES: ± 2°

**ORDER CODE: XXXX - X - 15 - XX - XX - XX - 10 - 0**

**BASIC PART #**

**SPECIFY SHELL FINISH:**
**01** 200μ" TIN/LEAD OVER NICKEL
◇ **80** 200μ" TIN OVER NICKEL (RoHS)
◇ **15** 10μ" GOLD OVER NICKEL (RoHS)

**SPECIFY CONTACT FINISH:**
**02** 100μ" TIN/LEAD OVER NICKEL
◇ **84** 100μ" TIN OVER NICKEL (RoHS)
◇ **27** 30μ" GOLD OVER NICKEL (RoHS)

RoHS 2002/95/EC

**SELECT CONTACT**
**#30 or #32** CONTACT (DATA ON PAGES 218 & 219)

## 4011

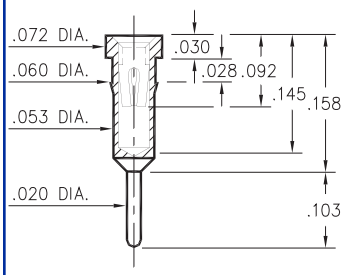


**4011-0-15-XX-30-XX-04-0**
Press-fit in .057 mounting hole

## 1801

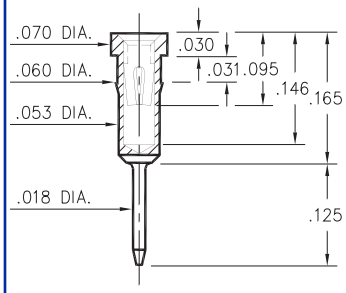


**1801-0-15-XX-30-XX-04-0**
Press-fit in .057 mounting hole
Shell is Ph. Br. Alloy 544 (B2)

## 1001

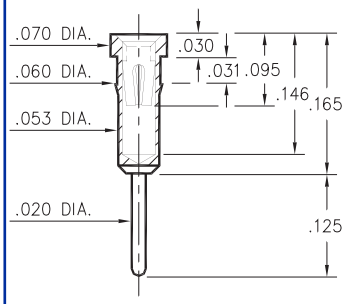


**1001-0-15-XX-3X-XX-04-0**
Press-fit in .057 mounting hole

## 0156

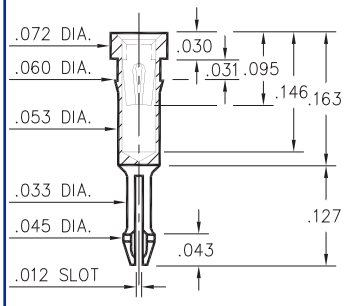


**0156-0-18-XX-30-XX-04-0**
Self-retention socket pin .038-.043 hole prior to soldering

## 0255

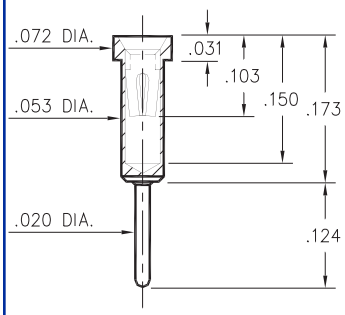


**0255-0-15-XX-30-XX-04-0**
Solder mount in .022 min. mounting hole

## 1109

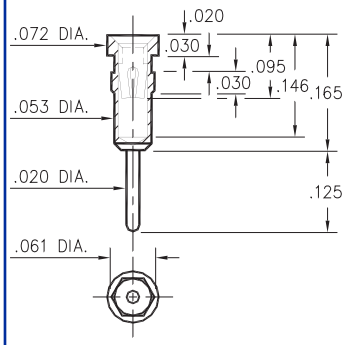


**1109-0-15-XX-30-XX-04-0**
Hex press-fit in .057 plated thru hole

## 3013

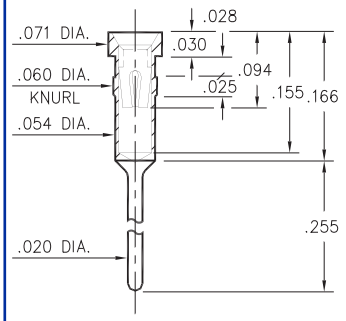


**3013-0-15-XX-32-XX-04-0**
Press-fit in .057 mounting hole

## 0134

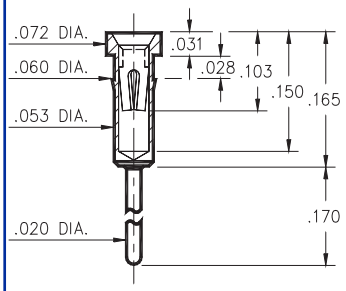


**0134-0-15-XX-3X-XX-04-0**
Press-fit in .057 mounting hole

## 0132/0135

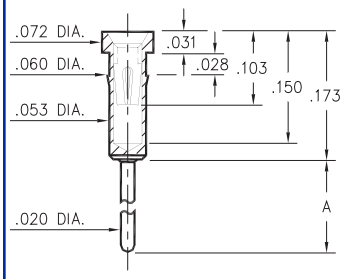


| Basic Part Number | Length A |
|---|---|
| 0132-0 | .273 |
| 0135-0 | .183 |

**013X-0-15-XX-30-XX-04-0**
Press-fit in .057 mounting hole

## 0133/0147

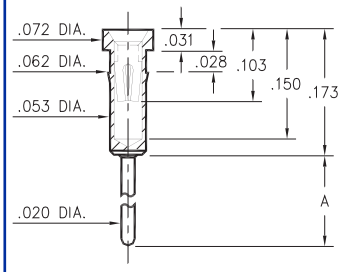


| Basic Part Number | Length A |
|---|---|
| 0133-0 | .382 |
| 0147-0 | .563 |

**01XX-0-15-XX-30-XX-04-0**
Press-fit in .059 mounting hole

## SPECIFICATIONS

**SHELL MATERIAL:**
Brass Alloy 360, 1/2 Hard

**CONTACT MATERIAL:**
Beryllium Copper Alloy 172, HT

**DIMENSION IN INCHES**
**TOLERANCES ON:**
LENGTHS: ±.005
DIAMETERS: ±.002
ANGLES: ± 2°

**ORDER CODE: XXXX - X - 1X - XX - XX - XX - 04 - 0**

**BASIC PART #**

**SPECIFY SHELL FINISH:**
**01** 200μ" TIN/LEAD OVER NICKEL
◇ **80** 200μ" TIN OVER NICKEL (RoHS)
◇ **15** 10μ" GOLD OVER NICKEL (RoHS)

**SPECIFY CONTACT FINISH:**
**02** 100μ" TIN/LEAD OVER NICKEL
◇ **84** 100μ" TIN OVER NICKEL (RoHS)
◇ **27** 30μ" GOLD OVER NICKEL (RoHS)

RoHS 2002/95/EC

**SELECT CONTACT**
**#30 or #32** CONTACT (DATA ON PAGES 218 & 219)

## 1005/1013/8898

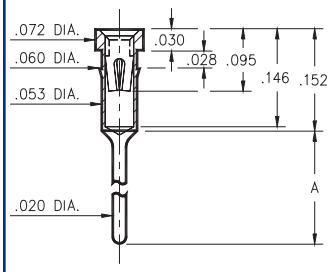


| Basic Part Number | Length A |
|---|---|
| 1005-0 | .138 |
| 1013-0 | .165 |
| 8898-0 | .224 |

NOTE: 8898 is not annealed & not suitable for auto-clinching

**XXXX-0-15-XX-3X-XX-04-0**
Press-fit in .057 mounting hole
1/4 hard brass shell for auto-clinching

## 0145/0146

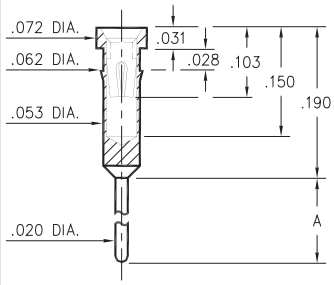


| Basic Part Number | Length A |
|---|---|
| 0145-0 | .300 |
| 0146-0 | .410 |

**014X-0-15-XX-30-XX-04-0**
Press-fit in .059 mounting hole

## 4378

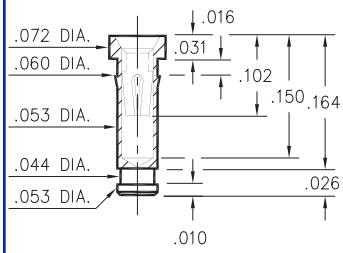


**4378-0-15-XX-30-XX-10-0**
Press-fit in .057 mounting hole

## 0556

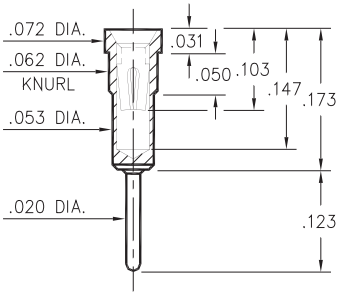


**0556-0-15-XX-30-XX-04-0**
Press-fit in .059 mounting hole

## 1103

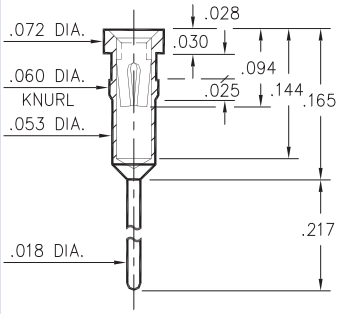


**1103-0-15-XX-30-XX-04-0**
Press-fit in .057 mounting hole

## 9234

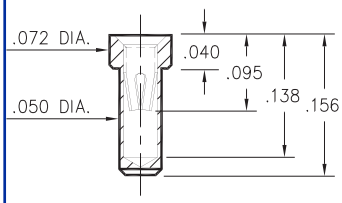


**9234-0-15-XX-30-XX-10-0**
Solder mount in .052 min. mounting hole

## 0136/37/38/39/41/48/52

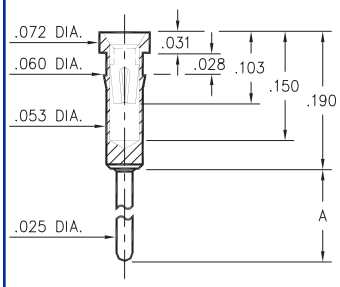


| Basic Part Number | Length A |
|---|---|
| 0136-0 | 1.215 |
| 0137-0 | .560 |
| 0138-0 | .210 |
| 0139-0 | .635 |
| 0141-0 | .700 |
| 0148-0 | .455 |
| 0152-0 | .410 |

**01XX-0-15-XX-30-XX-04-0**
Press-fit in .057 mounting hole

## 0447

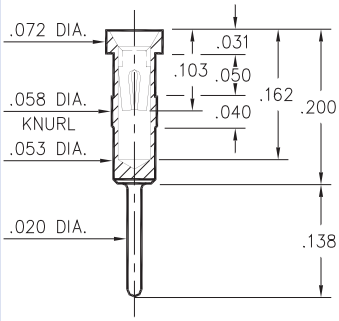


**0447-0-15-XX-30-XX-04-0**
Press-fit in .056 mounting hole

## 5660

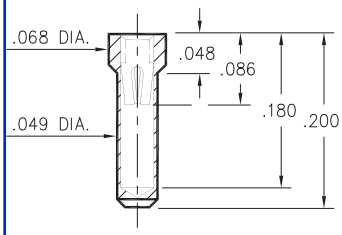


**5660-0-15-XX-30-XX-10-0**
Solder mount in .051 min. mounting hole

## SPECIFICATIONS

**SHELL MATERIAL:**
Brass Alloy 360, 1/2 Hard

**CONTACT MATERIAL:**
Beryllium Copper Alloy 172, HT

**DIMENSION IN INCHES**
**TOLERANCES ON:**
LENGTHS: ±.005
DIAMETERS: ±.002
ANGLES: ± 2°

**ORDER CODE: XXXX - X - 15 - XX - XX - XX - XX - 0**

**BASIC PART #**

**SPECIFY SHELL FINISH:**
**01** 200μ" TIN/LEAD OVER NICKEL
◇ **80** 200μ" TIN OVER NICKEL (RoHS)
◇ **15** 10μ" GOLD OVER NICKEL (RoHS)

**SPECIFY CONTACT FINISH:**
**02** 100μ" TIN/LEAD OVER NICKEL
◇ **84** 100μ" TIN OVER NICKEL (RoHS)
◇ **27** 30μ" GOLD OVER NICKEL (RoHS)

RoHS 2002/95/EC

**SELECT CONTACT**
**#30 or #32** CONTACT (DATA ON PAGES 218 & 219)

## 7132

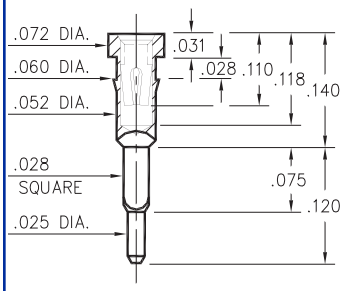


**7132-0-15-XX-30-XX-04-0**
Square press-fit for .032 ±.002 plated thru hole

## 8445

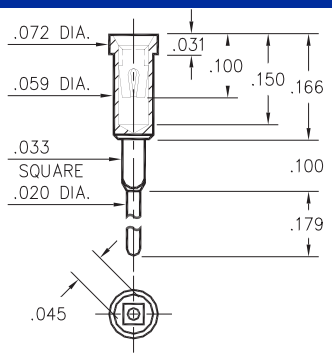


**8445-0-15-XX-30-XX-04-0**
Square press-fit for .039 ±.002 plated thru hole

## 1038

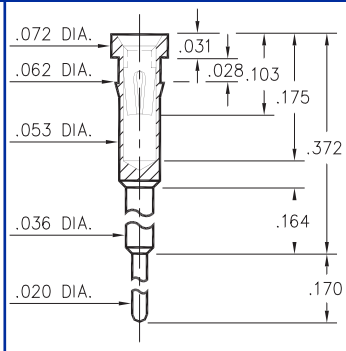


**1038-0-15-XX-30-XX-04-0**
Press-fit in .059 mounting hole

## 1261

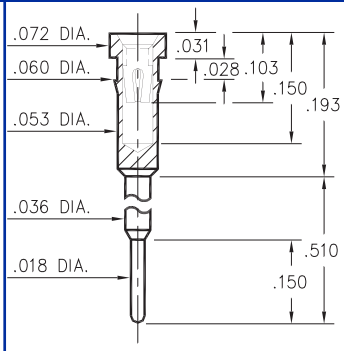


**1261-0-15-XX-30-XX-04-0**
Press-fit in .057 mounting hole

## 0153

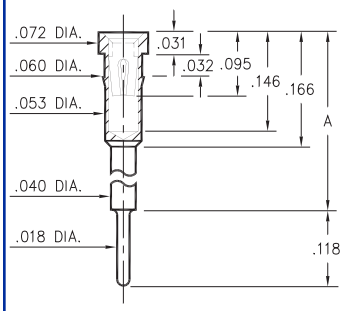


| Basic Part Number | Height A |
|---|---|
| 0153-1 | .236 |
| 0153-2 | .315 |
| 0153-3 | .402 |
| 0153-4 | .472 |
| 0153-5 | .594 |
| 0153-6 | .699 |

**0153-X-15-XX-30-XX-04-0**
Press-fit in .057 mounting hole

## 1602/1610

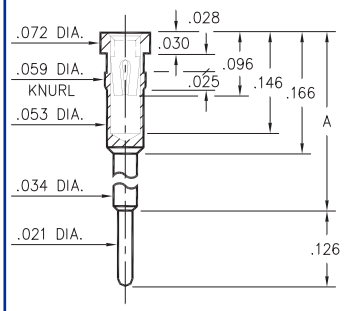


| Basic Part Number | Height A |
|---|---|
| 1602-0 | .441 |
| 1610-0 | .642 |

**16XX-0-15-XX-30-XX-04-0**
Press-fit in .057 mounting hole

## 0903/0904

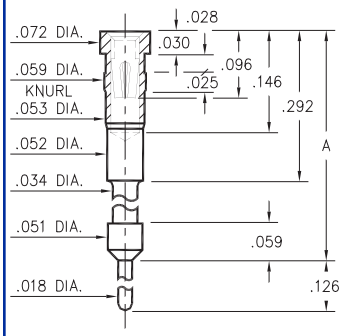


| Basic Part Number | Height A |
|---|---|
| 0903-0 | .841 |
| 0904-0 | 1.141 |

**090X-0-15-XX-30-XX-04-0**
Press-fit in .057 mounting hole

## 8252

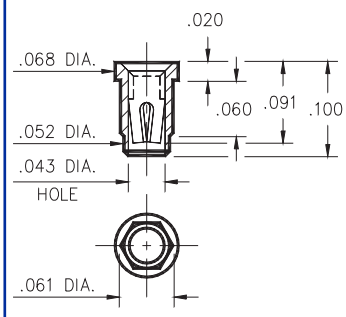


**8252-0-15-XX-30-XX-10-0**
Press-fit in .057 plated thru hole

## 4078

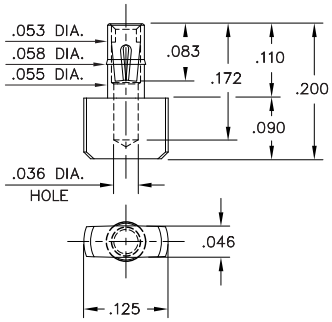


**4078-0-15-XX-30-XX-40-0**
Press-fit in .057 mounting hole

## SPECIFICATIONS

**SHELL MATERIAL:**
Brass Alloy 360, 1/2 Hard

**CONTACT MATERIAL:**
Beryllium Copper Alloy 172, HT

**DIMENSION IN INCHES**
**TOLERANCES ON:**
LENGTHS: ±.005
DIAMETERS: ±.002
ANGLES: ± 2°

**ORDER CODE: XXXX - X - 15 - XX - 30 - XX - XX - 0**

**BASIC PART #**

**SPECIFY SHELL FINISH:**
**01** 200μ" TIN/LEAD OVER NICKEL
◇ **80** 200μ" TIN OVER NICKEL (RoHS)
◇ **15** 10μ" GOLD OVER NICKEL (RoHS)

**SPECIFY CONTACT FINISH:**
**02** 100μ" TIN/LEAD OVER NICKEL
◇ **84** 100μ" TIN OVER NICKEL (RoHS)
◇ **27** 30μ" GOLD OVER NICKEL (RoHS)

RoHS 2002/95/EC

**CONTACT**
**#30** CONTACT (DATA ON PAGES 218)

## 1707

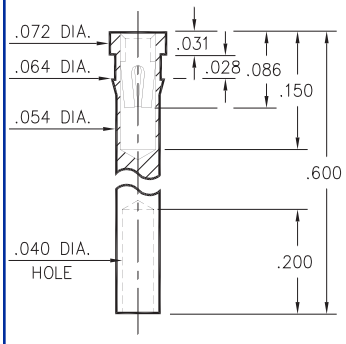


**1707-0-19-XX-30-XX-10-0**
Press-fit in .061 mounting hole

## 0240

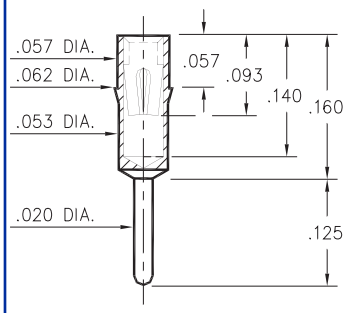


**0240-0-15-XX-30-XX-04-0**
Press-fit in .059 mounting hole

## 0307

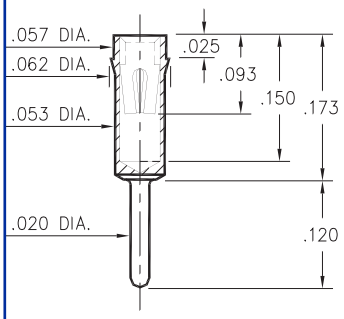


**0307-0-15-XX-30-XX-04-0**
Press-fit in .059 mounting hole

## 1753

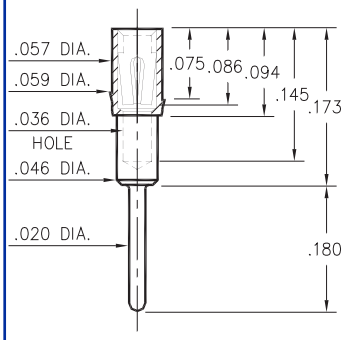


**1753-0-15-XX-30-XX-04-0**
Press-fit in .057 mounting hole

## 1705/1706/1762

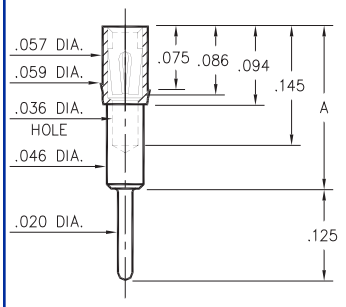


| Basic Part Number | Height A |
|---|---|
| 1705-0 | .165 |
| 1706-0 | .218 |
| 1762-0 | .300 |

**17XX-0-15-XX-3X-XX-04-0**
Press-fit in .057 mounting hole

## 0672

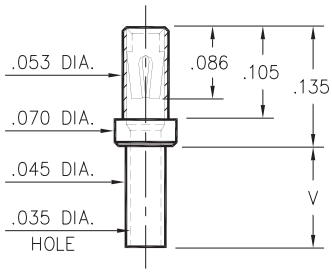


| Basic Part Number | Board Thickness | Length V |
|---|---|---|
| 0672-1 | .031 | .052 |
| 0672-2 | .062 | .084 |
| 0672-3 | .094 | .115 |
| 0672-4 | .125 | .146 |

**0672-X-15-XX-30-XX-10-0**
Swage mount in .049 hole

## 1024/1104

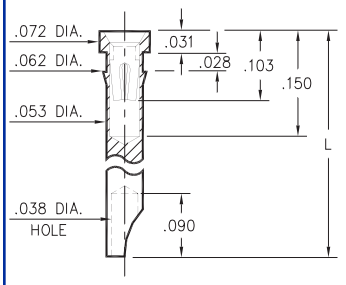


| Basic Part Number | Length L |
|---|---|
| 1024-0 | .290 |
| 1104-0 | .450 |

**1XX4-0-18-XX-30-XX-10-0**
Press-fit in .059 mounting hole

## 0498

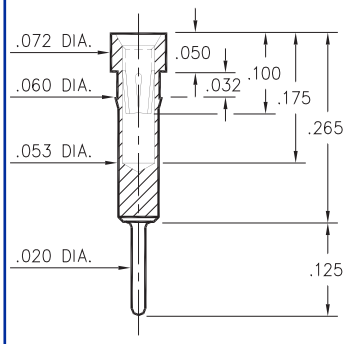


**0498-0-15-XX-35-XX-04-0**
Press-fit in .057 mounting hole

## 8131

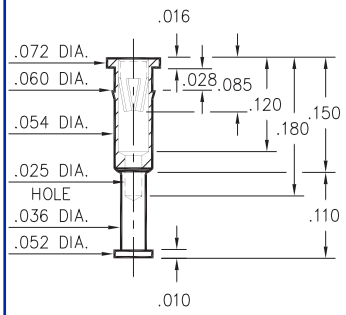


**8131-0-15-XX-30-XX-10-0**
Press-fit in .057 mounting hole

## SPECIFICATIONS

**SHELL MATERIAL:**
Brass Alloy 360, 1/2 Hard

**CONTACT MATERIAL:**
Beryllium Copper Alloy 172, HT

**DIMENSION IN INCHES**
**TOLERANCES ON:**
LENGTHS: ±.005
DIAMETERS: ±.002
ANGLES: ± 2°

**ORDER CODE: XXXX - X - 1X - XX - XX - XX - XX - 0**

**BASIC PART #**

**SPECIFY SHELL FINISH:**
**01** 200μ" TIN/LEAD OVER NICKEL
◇ **80** 200μ" TIN OVER NICKEL (RoHS)
◇ **15** 10μ" GOLD OVER NICKEL (RoHS)

**SPECIFY CONTACT FINISH:**
**02** 100μ" TIN/LEAD OVER NICKEL
◇ **84** 100μ" TIN OVER NICKEL (RoHS)
◇ **27** 30μ" GOLD OVER NICKEL (RoHS)

RoHS 2002/95/EC

**SELECT CONTACT**
**#30 or #35** CONTACT (DATA ON PAGES 218 & 219)

## 1802/3802/4030/8866

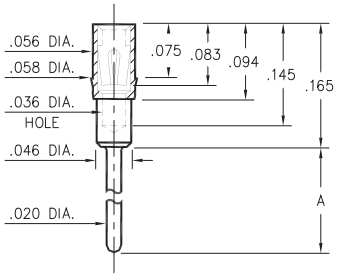


| Basic Part Number | Length A |
|---|---|
| 1802-0 | .125 |
| 3802-0 | .165 |
| 8866-0 | .775 |
| 4030-0 | .815 |

**XXXX-0-15-XX-43-XX-04-0**
Press-fit in .057 mounting hole

## 1803/1805

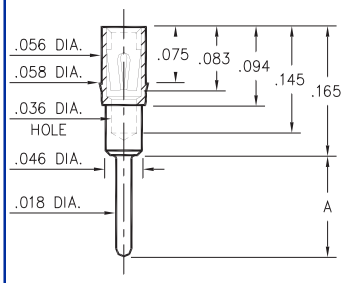


| Basic Part Number | Length A |
|---|---|
| 1803-0 | .145 |
| 1805-0 | .213 |

**180X-0-15-XX-43-XX-04-0**
Press-fit in .057 mounting hole

## 1804/1806

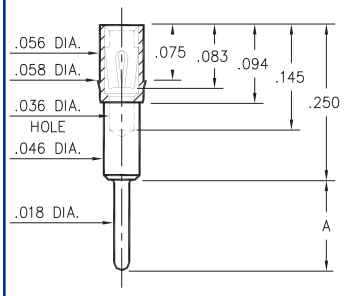


| Basic Part Number | Length A |
|---|---|
| 1804-0 | .080 |
| 1806-0 | .115 |

**180X-0-15-XX-43-XX-04-0**
Press-fit in .057 mounting hole

## 1808

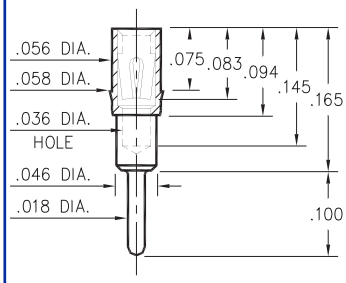


**1808-0-15-XX-43-XX-04-0**
Press-fit in .057 mounting hole

## 1807

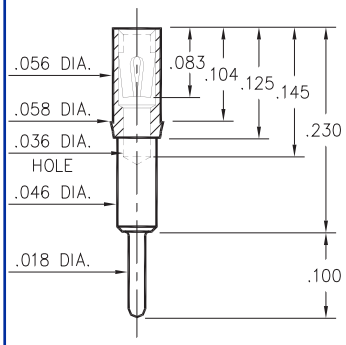


**1807-0-15-XX-43-XX-04-0**
Press-fit in .057 mounting hole

## 3805

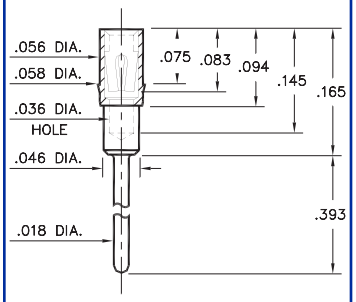


**3805-0-15-XX-43-XX-04-0**
Press-fit in .057 mounting hole

## 8830

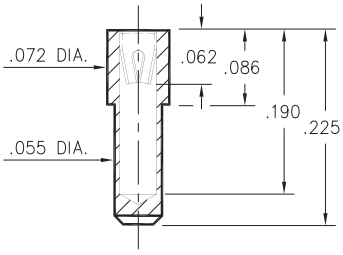


**8830-0-15-XX-22-XX-10-0**
Solder mount in .057 min. mounting hole

## 4622

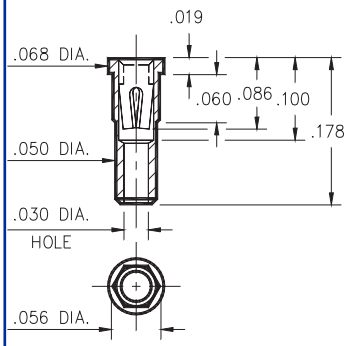


**4622-0-15-XX-30-XX-10-0**
Hex press-fit in .053 plated thru hole

## 6252

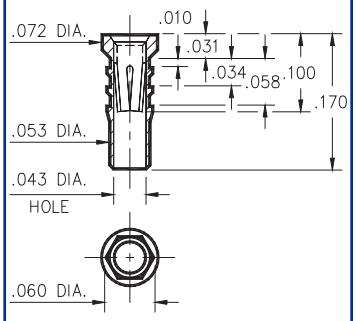


**6252-0-15-XX-32-XX-10-0**
Hex press-fit in .057 plated thru hole

## SPECIFICATIONS

**SHELL MATERIAL:**
Brass Alloy 360, 1/2 Hard

**CONTACT MATERIAL:**
Beryllium Copper Alloy 172, HT

**DIMENSION IN INCHES**
**TOLERANCES ON:**
LENGTHS: ±.005
DIAMETERS: ±.002
ANGLES: ± 2°

**ORDER CODE: XXXX - X - 15 - XX - XX - XX - XX - 0**

**BASIC PART #**

**SPECIFY SHELL FINISH:**
**01** 200μ" TIN/LEAD OVER NICKEL
◇ **80** 200μ" TIN OVER NICKEL (RoHS)
◇ **15** 10μ" GOLD OVER NICKEL (RoHS)

**SPECIFY CONTACT FINISH:**
**02** 100μ" TIN/LEAD OVER NICKEL
◇ **84** 100μ" TIN OVER NICKEL (RoHS)
◇ **27** 30μ" GOLD OVER NICKEL (RoHS)

RoHS 2002/95/EC

**SELECT CONTACT**
**#22, #30, #32 or #43** CONTACT (DATA ON PAGES 218,219 & 220)

## 0385

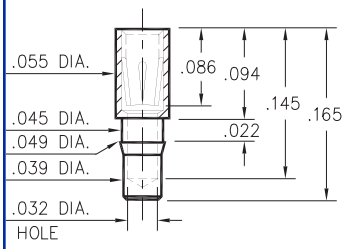


**0385-0-15-XX-43-XX-10-0**
Press-fit in .046 mounting hole

## 4001

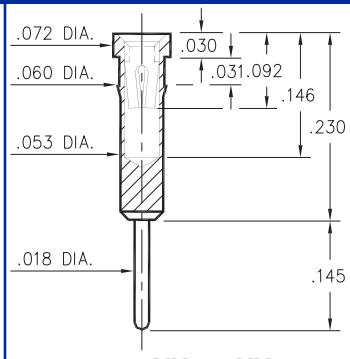


**4001-0-15-XX-43-XX-04-0**
Press-fit in .057 mounting hole

## 1782

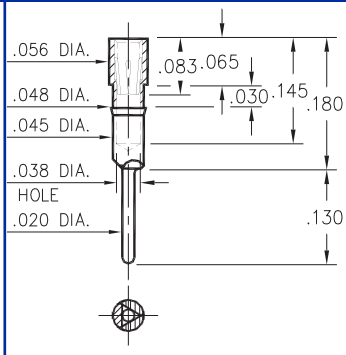


**1782-0-15-XX-43-XX-04-0**
Press-fit in .045 mounting hole

## 5960

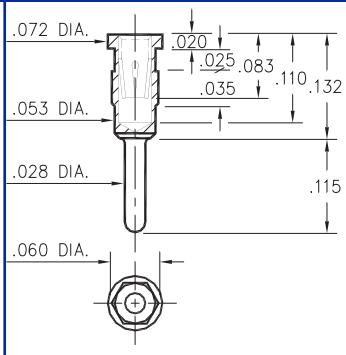


**5960-0-15-XX-43-XX-04-0**
Hex press-fit in .057 plated thru hole

## 1401/3185

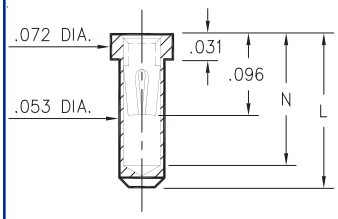


| Basic Part Number | Depth N | Length L |
|---|---|---|
| 1401-0 | .145 | .165 |
| 3185-0 | .109 | .130 |

**XXXX-0-15-XX-30-XX-10-0**
Solder mount in .055 min. mounting hole

## 4310

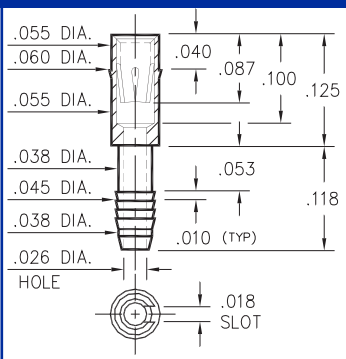


**4310-0-31-XX-43-XX-04-0**
Compliant press-fit in .040±.003 plated hole. For .090→.130 thick board.

## 1385

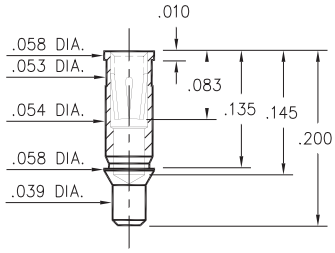


**1385-0-15-XX-43-XX-10-0**
Surface mount

## 3018

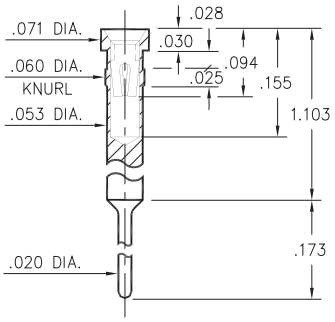


**3018-0-15-XX-30-XX-04-0**
Press-fit in .057 mounting hole

## 3907

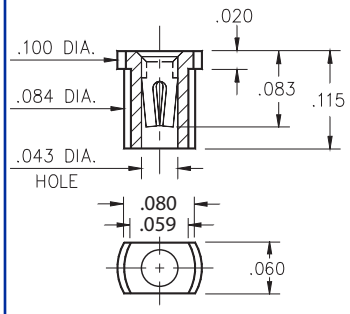


**3907-0-18-XX-30-XX-10-0**
Surface mount
Also available on 12mm wide carrier tape: 4,000 parts per 13" reel.
Order as: 3907-0-58-XX-30-XX-10-0

## 8852

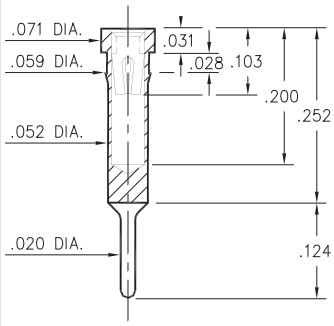


**8852-0-15-XX-30-XX-04-0**
Press-fit in .056 mounting hole

## 8363

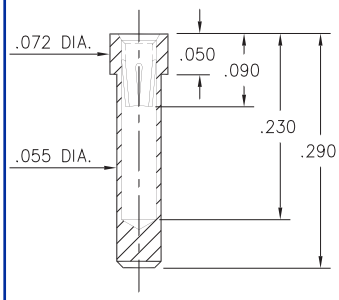


**8363-0-15-XX-35-XX-10-0**
Solder mount in .057 min. mounting hole

## SPECIFICATIONS

**SHELL MATERIAL:**
Brass Alloy 360, 1/2 Hard

**CONTACT MATERIAL:**
Beryllium Copper Alloy 172, HT

**DIMENSION IN INCHES**
**TOLERANCES ON:**
LENGTHS: ±.005
DIAMETERS: ±.002
ANGLES: ± 2°

**ORDER CODE: XXXX - X - XX - XX - XX - XX - XX - 0**

**BASIC PART #**

**SPECIFY SHELL FINISH:**
**01** 200μ" TIN/LEAD OVER NICKEL
◇ **80** 200μ" TIN OVER NICKEL (RoHS)
◇ **15** 10μ" GOLD OVER NICKEL (RoHS)

**SPECIFY CONTACT FINISH:**
**02** 100μ" TIN/LEAD OVER NICKEL
◇ **84** 100μ" TIN OVER NICKEL (RoHS)
◇ **27** 30μ" GOLD OVER NICKEL (RoHS)

RoHS 2002/95/EC

**SELECT CONTACT**
**#30, #35 or #43** CONTACT (DATA ON PAGES 218, 219 & 220)

## 8964

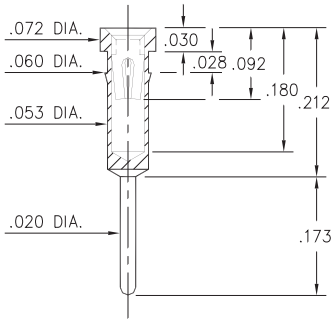


**8964-0-15-XX-30-XX-04-0**
Press-fit in .057 mounting hole

## 5342

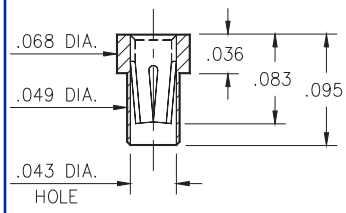


**5342-0-15-XX-35-XX-10-0**
Solder mount in .051 min. mounting hole

## 8857

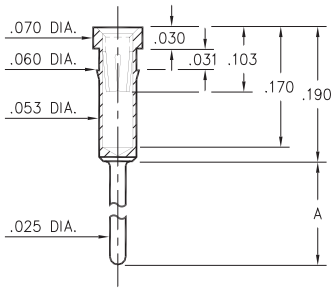


| Basic Part Number | Length A |
|---|---|
| 8857-0 | .311 |
| 8857-1 | .448 |
| 8857-2 | .589 |
| 8857-3 | .731 |
| 8857-4 | .871 |

**8857-X-15-XX-32-XX-04-0**
Press-fit in .057 mounting hole

## 8862/8877

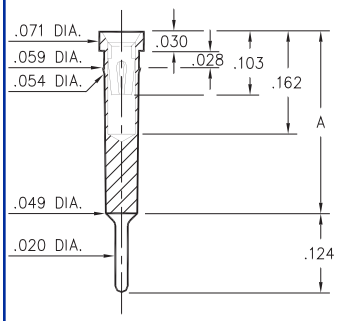


| Basic Part Number | Length A |
|---|---|
| 8862-0 | .300 |
| 8877-0 | .350 |

**88XX-0-15-XX-30-XX-04-0**
Press-fit in .056 mounting hole

## 1334

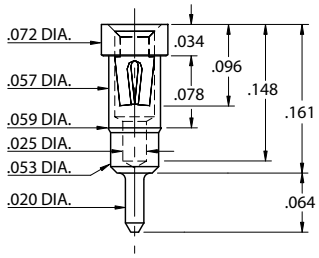


**1334-0-15-XX-30-XX-04-0**
Press-fit in .057 mounting hole

## 8855

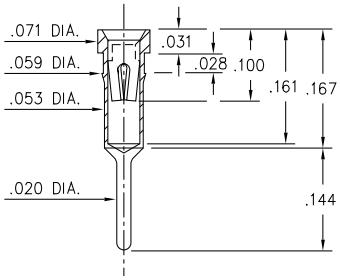


**8855-0-15-XX-30-XX-34-0**
Press-fit in .057 mounting hole

## 2954

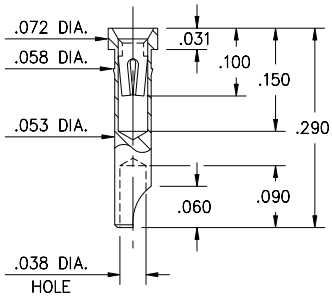


**2954-0-18-XX-30-XX-10-0**
Press-fit in .057 mounting hole

## 9363

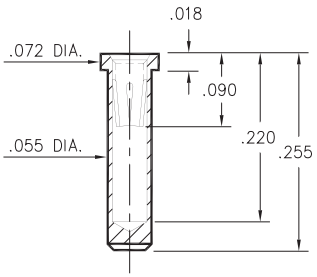


**9363-0-15-XX-35-XX-10-0**
Solder mount in .057 min. mounting hole

## 1023

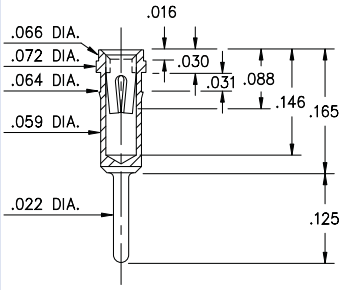


**1023-0-15-XX-30-XX-04-0**
Press-fit in .061 mounting hole

## 1701

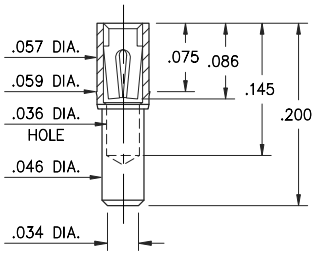


**1701-0-15-XX-30-XX-10-0**
Press-fit in .057 mounting hole

## SPECIFICATIONS

**SHELL MATERIAL:**
Brass Alloy 360, 1/2 Hard

**CONTACT MATERIAL:**
Beryllium Copper Alloy 172, HT

**DIMENSION IN INCHES**
**TOLERANCES ON:**
LENGTHS: ±.005
DIAMETERS: ±.002
ANGLES: ± 2°

**ORDER CODE: XXXX - X - 1X - XX - XX - XX - XX - 0**

**BASIC PART #**

**SPECIFY SHELL FINISH:**
**01** 200μ" TIN/LEAD OVER NICKEL
◇ **80** 200μ" TIN OVER NICKEL (RoHS)
◇ **15** 10μ" GOLD OVER NICKEL (RoHS)

**SPECIFY CONTACT FINISH:**
**02** 100μ" TIN/LEAD OVER NICKEL
◇ **84** 100μ" TIN OVER NICKEL (RoHS)
◇ **27** 30μ" GOLD OVER NICKEL (RoHS)

RoHS 2002/95/EC

**SELECT CONTACT**
**#30, #32 or #35** CONTACT (DATA ON PAGES 218 & 219)

## 0338

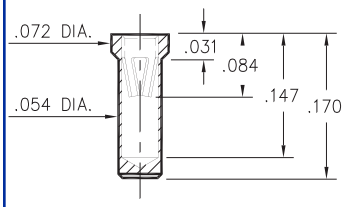


**0338-0-15-XX-15-XX-10-0**
Solder mount in .057 min. mounting hole

## 0378

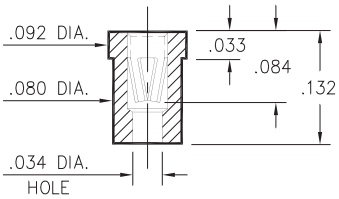


**0378-0-15-XX-15-XX-10-0**
Solder mount in .082 min. mounting hole

## 6002

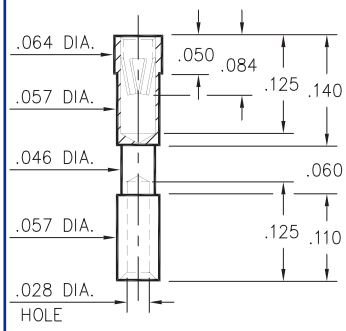


**6002-0-19-XX-15-XX-10-0**
Solder mount in .059 min. mounting hole

## 7009

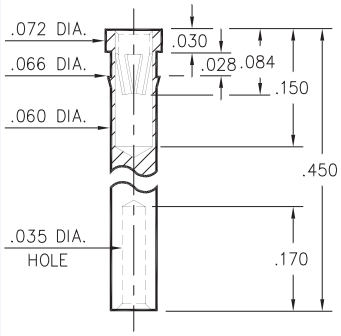


**7009-0-19-XX-15-XX-10-0**
Press-fit in .063 mounting hole

## 0339

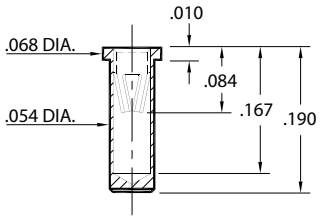


**0339-0-15-XX-15-XX-10-0**
Solder mount in .057 min. mounting hole

## SPECIFICATIONS

**SHELL MATERIAL:**
Brass Alloy 360, 1/2 Hard

**CONTACT MATERIAL:**
Beryllium Copper Alloy 172, HT

**DIMENSION IN INCHES**
**TOLERANCES ON:**
LENGTHS: ±.005
DIAMETERS: ±.002
ANGLES: ± 2°

**ORDER CODE: XXXX - X - 1X - XX - 15 - XX - 10 - 0**

**BASIC PART #**

**SPECIFY SHELL FINISH:**
**01** 200μ" TIN/LEAD OVER NICKEL
◇ **80** 200μ" TIN OVER NICKEL (RoHS)
◇ **15** 10μ" GOLD OVER NICKEL (RoHS)

**SPECIFY CONTACT FINISH:**
**01** 200μ" TIN/LEAD OVER NICKEL
◇ **80** 200μ" TIN OVER NICKEL (RoHS)
◇ **27** 30μ" GOLD OVER NICKEL (RoHS)

RoHS 2002/95/EC

**CONTACT**
**#15** CONTACT (DATA ON PAGE 220)

## 0295

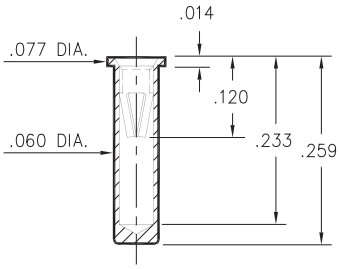


**0295-0-15-XX-06-XX-10-0**
Solder mount in .063 min. mounting hole
Also available on 24mm wide carrier tape: 1,000 parts per 13" reel.
Order as: 0295-0-57-XX-06-XX-10-0

## 0292

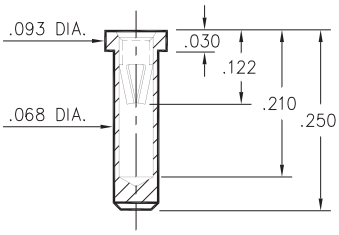


**0292-0-15-XX-06-XX-10-0**
Solder mount in .071 min. mounting hole

## 0294

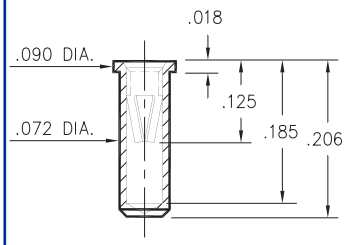


**0294-0-15-XX-06-XX-10-0**
Solder mount in .076 min. mounting hole

## 0398

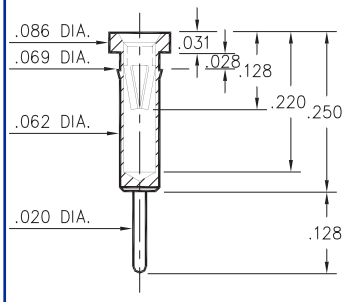


**0398-0-15-XX-06-XX-04-0**
Press-fit in .066 mounting hole

## 0397

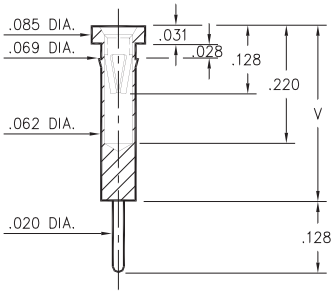


| Basic Part Number | Length V |
|---|---|
| 0397-0 | .353 |
| 0397-1 | .333 |
| 0397-2 | .413 |

**0397-X-15-XX-06-XX-04-0**
Press-fit in .066 mounting hole

## 0297

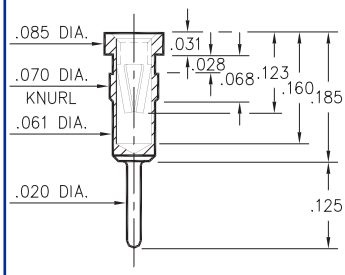


**0297-0-15-XX-06-XX-04-0**
Press-fit in .067 mounting hole

## 9019/9039

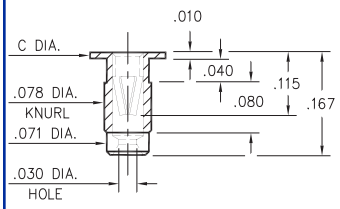


| Basic Part Number | Head Dia. C |
|---|---|
| 9019-0 | .125 |
| 9039-0 | .100 |

**90X9-X-19-XX-06-XX-10-0**
Press-fit in .075 mounting hole

## SPECIFICATIONS

**SHELL MATERIAL:**
Brass Alloy 360, 1/2 Hard

**CONTACT MATERIAL:**
Beryllium Copper Alloy 172, HT

**DIMENSION IN INCHES**
**TOLERANCES ON:**
LENGTHS: ±.005
DIAMETERS: ±.002
ANGLES: ± 2°

**ORDER CODE: XXXX - X - 1X - XX - 06 - XX - XX - 0**

**BASIC PART #**

**SPECIFY SHELL FINISH:**
**01** 200μ" TIN/LEAD OVER NICKEL
◇ **80** 200μ" TIN OVER NICKEL (RoHS)
◇ **15** 10μ" GOLD OVER NICKEL (RoHS)

**SPECIFY CONTACT FINISH:**
**01** 200μ" TIN/LEAD OVER NICKEL
◇ **80** 200μ" TIN OVER NICKEL (RoHS)
◇ **27** 30μ" GOLD OVER NICKEL (RoHS)

RoHS 2002/95/EC

**CONTACT**
**#06** CONTACT (DATA ON PAGE 220)

## 0326

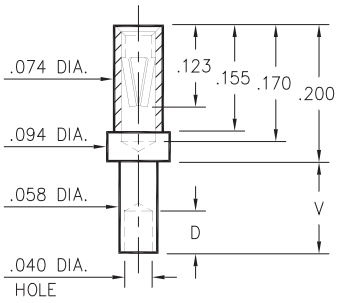


| Basic Part Number | Board Thick-ness | Length V | Depth D |
|---|---|---|---|
| 0326-1 | .031 | .062 | .040 |
| 0326-2 | .062 | .094 | .062 |
| 0326-3 | .094 | .125 | .062 |
| 0326-4 | .125 | .156 | .062 |

**0326-X-19-XX-06-XX-10-0**
Swage mount in .060 hole

## 5295

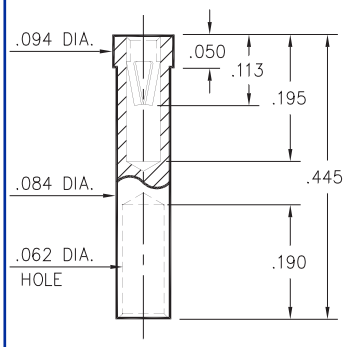


**5295-0-19-XX-06-XX-10-0**
Solder mount in .086 min. mounting hole

## 0396

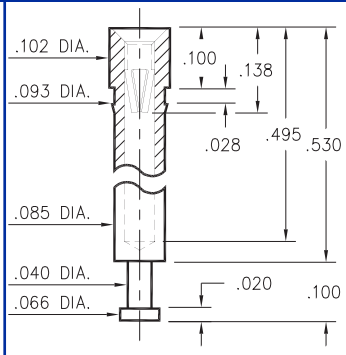


**0396-0-15-XX-06-XX-10-0**
Press-fit in .090 mounting hole

## 0298

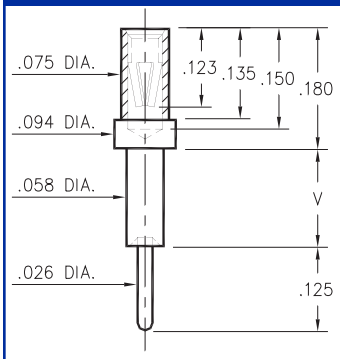


| Basic Part Number | Board Thick-ness | Length V |
|---|---|---|
| 0298-1 | .031 | .051 |
| 0298-2 | .062 | .082 |
| 0298-3 | .094 | .113 |
| 0298-4 | .125 | .145 |

**0298-X-15-XX-06-XX-10-0**
Swage mount in .060 hole

## 9293

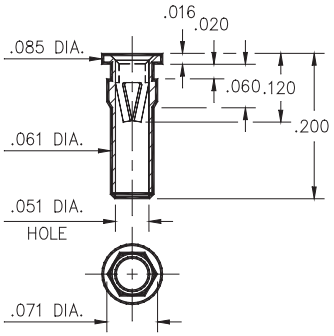


**9293-0-15-XX-06-XX-10-0**
Hex press-fit in .067 plated thru hole

## 8864

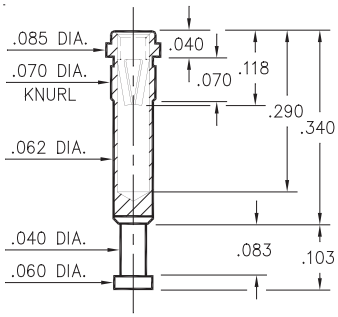


**8864-0-15-XX-06-XX-10-0**
Press-fit in.067 mounting hole

## 0664

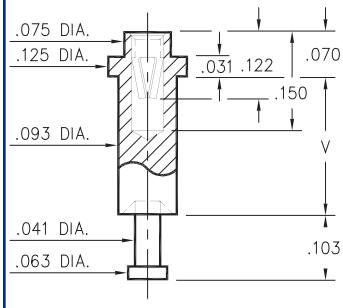


| Basic Part Number | Board Thick-ness | Length V |
|---|---|---|
| 0664-1 | .094 | .125 |
| 0664-2 | .125 | .156 |
| 0664-3 | .188 | .219 |

**0664-X-15-XX-06-XX-10-0**
Swage mount in .096 hole

## SPECIFICATIONS

**SHELL MATERIAL:**
Brass Alloy 360, 1/2 Hard

**CONTACT MATERIAL:**
Beryllium Copper Alloy 172, HT

**DIMENSION IN INCHES**
**TOLERANCES ON:**
LENGTHS: ±.005
DIAMETERS: ±.002
ANGLES: ± 2°

**ORDER CODE: XXXX - X - 1X - XX - 06 - XX - 10 - 0**

**BASIC PART #**

**SPECIFY SHELL FINISH:**
**01** 200μ" TIN/LEAD OVER NICKEL
◇ **80** 200μ" TIN OVER NICKEL (RoHS)
◇ **15** 10μ" GOLD OVER NICKEL (RoHS)

**SPECIFY CONTACT FINISH:**
**01** 200μ" TIN/LEAD OVER NICKEL
◇ **80** 200μ" TIN OVER NICKEL (RoHS)
◇ **27** 30μ" GOLD OVER NICKEL (RoHS)

RoHS 2002/95/EC

**CONTACT**
**#06** CONTACT (DATA ON PAGE 220)

# PIN RECEPTACLES
## for .022" - .034" diameter pins and .025" square pins

## 0291

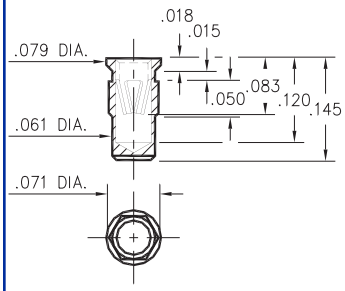


**0291-0-15-XX-16-XX-10-0**
Hex press-fit in .067 plated thru hole

## 0293

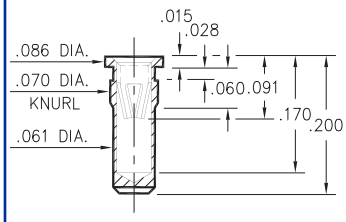


**0293-0-15-XX-16-XX-10-0**
Press-fit in.067 mounting hole

## 0287

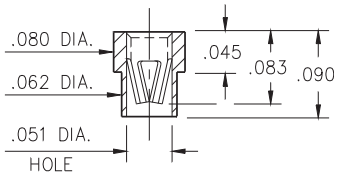


**0287-0-15-XX-16-XX-10-0**
Solder mount in .065 min. mounting hole
Also available on 8mm wide carrier tape: 3,250 parts per 13" reel.
Order as: 0287-0-57-XX-16-XX-10-0

## 0285

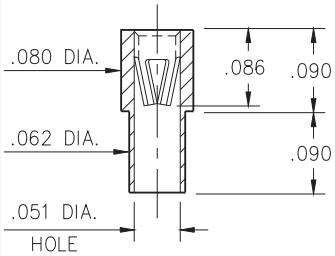


**0285-0-15-XX-16-XX-10-0**
Solder mount in .065 min. mounting hole

## 0284

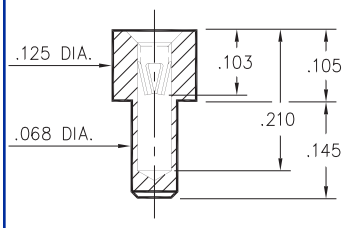


**0284-0-15-XX-16-XX-10-0**
Solder mount in .070 min. mounting hole

## 8114

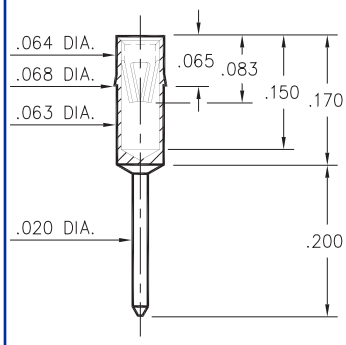


**8114-0-15-XX-16-XX-04-0**
Press-fit from underside of pc board into .065 mounting hole

## 0407

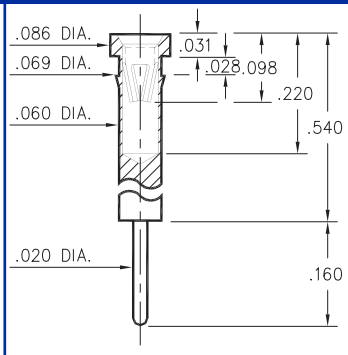


**0407-0-15-XX-16-XX-04-0**
Press-fit in .066 mounting hole

## 0415

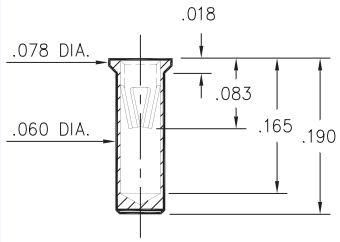


**0415-0-15-XX-16-XX-10-0**
Solder mount in .063 min. mounting hole
Also available on 24mm wide carrier tape: 1,500 parts per 13" reel.
Order as: 0415-0-57-XX-16-XX-10-0

## 0303

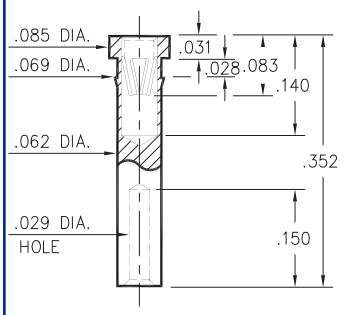


**0303-0-19-XX-16-XX-10-0**
Wire Termination
Press-fit in .067 mounting hole

## 0306

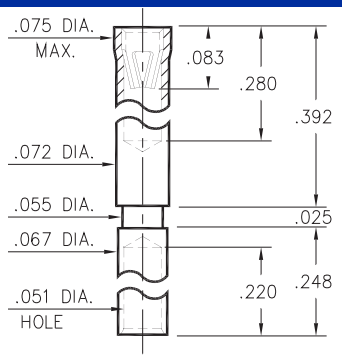


**0306-0-19-XX-16-XX-10-0**
Wire Termination
#18 gage crimp barrel

## 0273

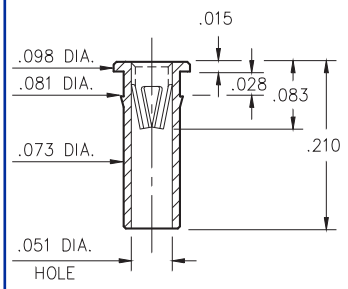


**0273-0-15-XX-16-XX-10-0**
Press-fit in .078 mounting hole

## 7520

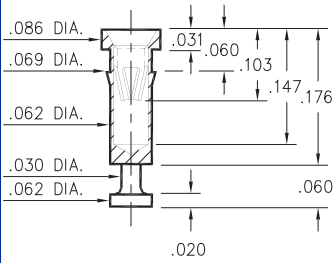


**7520-0-15-XX-16-XX-10-0**
Press-fit in .066 mounting hole

## SPECIFICATIONS

**SHELL MATERIAL:**
Brass Alloy 360, 1/2 Hard

**CONTACT MATERIAL:**
Beryllium Copper Alloy 172, HT

**DIMENSION IN INCHES**
**TOLERANCES ON:**
LENGTHS: ±.005
DIAMETERS: ±.002
ANGLES: ± 2°

**ORDER CODE: XXXX - X - 1X - XX - 16 - XX - XX - 0**

**BASIC PART #**

**SPECIFY SHELL FINISH:**
**01** 200µ" TIN/LEAD OVER NICKEL
◇ **80** 200µ" TIN OVER NICKEL (RoHS)
◇ **15** 10µ" GOLD OVER NICKEL (RoHS)

**SPECIFY CONTACT FINISH:**
**01** 200µ" TIN/LEAD OVER NICKEL
◇ **80** 200µ" TIN OVER NICKEL (RoHS)
◇ **27** 30µ" GOLD OVER NICKEL (RoHS)

RoHS 2002/95/EC

**CONTACT**
**#16** CONTACT (DATA ON PAGE 221)

## 9808

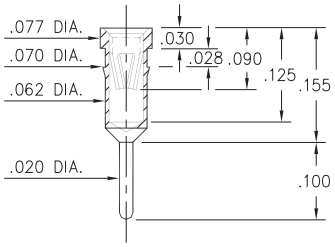


**9808-0-15-XX-16-XX-04-0**
Press-fit in .067 mounting hole

## 9101

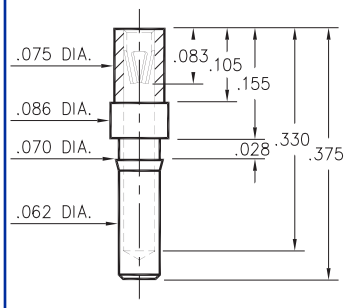


**9101-0-15-XX-16-XX-10-0**
Press-fit in .067 mounting hole

## 5650

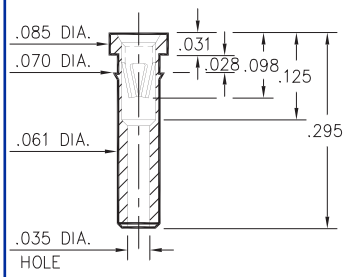


**5650-0-19-XX-16-XX-10-0**
Press-fit in .067 mounting hole

## 8679

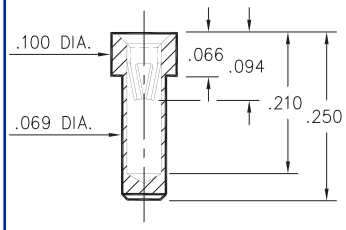


**8679-0-15-XX-16-XX-10-0**
Solder mount in .071 min.
mounting hole

## 8827

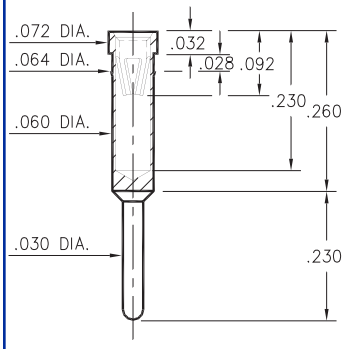


**8827-0-15-XX-16-XX-04-0**
Press-fit in .061 mounting hole

## 6021

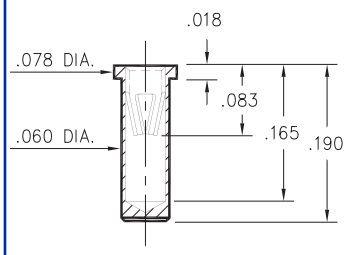


**6021-0-15-XX-16-XX-10-0**
Solder mount in .062 min.
mounting hole

## 1873

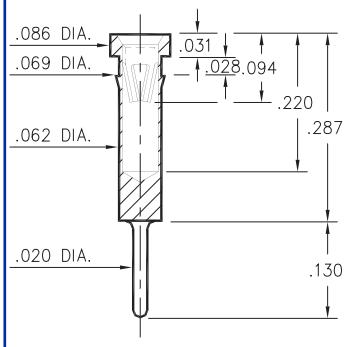


**1873-0-15-XX-16-XX-04-0**
Press-fit in .066 mounting hole

## SPECIFICATIONS

**SHELL MATERIAL:**
Brass Alloy 360, 1/2 Hard

**CONTACT MATERIAL:**
Beryllium Copper Alloy 172, HT

**DIMENSION IN INCHES**
**TOLERANCES ON:**
LENGTHS: ±.005
DIAMETERS: ±.002
ANGLES: ± 2°

**ORDER CODE: XXXX - X - 1X - XX - 16 - XX - XX - 0**

**BASIC PART #**

**SPECIFY SHELL FINISH:**
**01** 200μ" TIN/LEAD OVER NICKEL
◇ **80** 200μ" TIN OVER NICKEL (RoHS)
◇ **15** 10μ" GOLD OVER NICKEL (RoHS)

**SPECIFY CONTACT FINISH:**
**01** 200μ" TIN/LEAD OVER NICKEL
◇ **80** 200μ" TIN OVER NICKEL (RoHS)
◇ **27** 30μ" GOLD OVER NICKEL (RoHS)

RoHS 2002/95/EC

**CONTACT**
**#16** CONTACT (DATA ON PAGE 221)

# PIN RECEPTACLES
## for .025" - .037" diameter pins and .025" square pins

## 0305

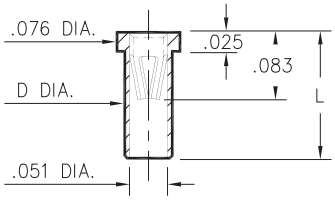


| Basic Part Number | Length L | Dia. D |
|---|---|---|
| 0305-0 | .095 | .056 |
| 0305-1 | .105 | .058 |
| 0305-2 | .155 | .058 |

**0305-X-15-XX-47-XX-10-0**
Solder mount in .059/.061 mounting hole
Also available on 24mm wide carrier tape: 1,500 parts per 13" reel.
Order as: 0305-2-57-XX-47-XX-10-0

## 0279

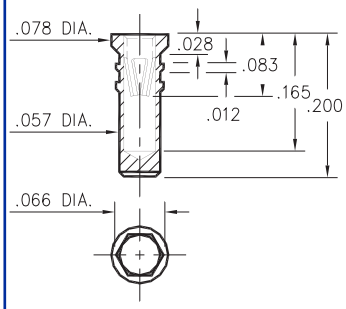


**0279-0-15-XX-47-XX-10-0**
Hex press-fit in .062 plated thru hole

## 0330

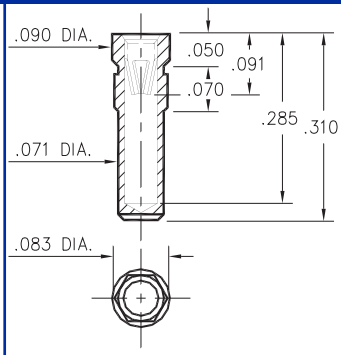


**0330-0-15-XX-47-XX-10-0**
Hex press-fit in .079 plated thru hole

## 0300/8300

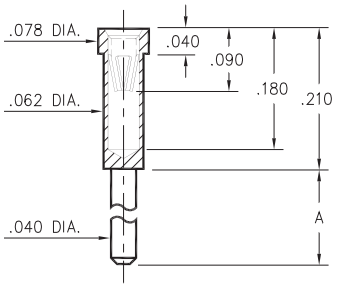


| Basic Part Number | Length A |
|---|---|
| 0300-1 | .110 |
| 0300-2 | .187 |
| 8300-0 | .140 |

**X300-X-15-XX-47-XX-10-0**
Solder mount in .042 min. mounting hole

## 0301

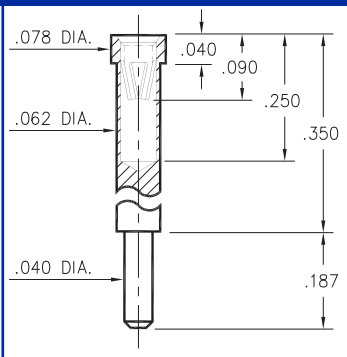


**0301-1-15-XX-47-XX-10-0**
Solder mount in .042 min. mounting hole

## 0309

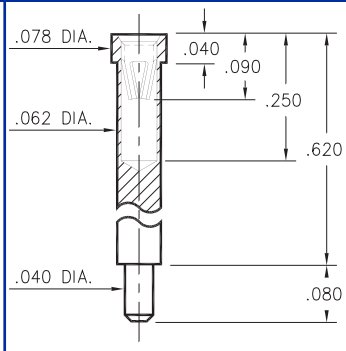


**0309-2-15-XX-47-XX-10-0**
Solder mount in .042 min. mounting hole

## 0399

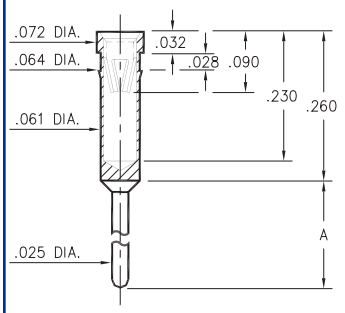


| Basic Part Number | Length A |
|---|---|
| 0399-0 | .230 |
| 0399-1 | .180 |

**0399-X-15-XX-47-XX-04-0**
Press-fit in .061 mounting hole

## 1304

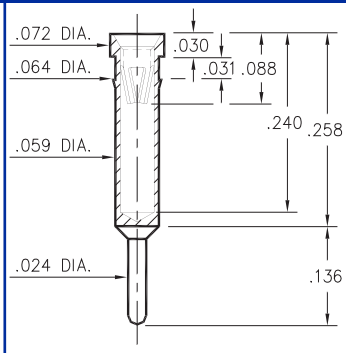


**1304-0-15-XX-47-XX-04-0**
Press-fit in .061 mounting hole

## SPECIFICATIONS

**SHELL MATERIAL:**
Brass Alloy 360, 1/2 Hard

**CONTACT MATERIAL:**
Beryllium Copper Alloy 172, HT

**DIMENSION IN INCHES**
**TOLERANCES ON:**
LENGTHS: ±.005
DIAMETERS: ±.002
ANGLES: ± 2°

**ORDER CODE: XXXX - X - 15 - XX - 47 - XX - XX - 0**

**BASIC PART #**

**SPECIFY SHELL FINISH:**
**01** 200μ" TIN/LEAD OVER NICKEL
◇ **80** 200μ" TIN OVER NICKEL (RoHS)
◇ **15** 10μ" GOLD OVER NICKEL (RoHS)

**SPECIFY CONTACT FINISH:**
**01** 200μ" TIN/LEAD OVER NICKEL
◇ **80** 200μ" TIN OVER NICKEL (RoHS)
◇ **27** 30μ" GOLD OVER NICKEL (RoHS)

RoHS 2002/95/EC

**CONTACT**
**#47** CONTACT (DATA ON PAGE 221)

# PIN RECEPTACLES
## for .025" - .037" diameter pins and .025" square pins

## 1305

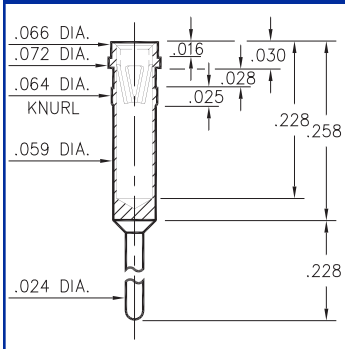


**1305-0-15-XX-47-XX-04-0**
Press-fit in .061 mounting hole.

## 1306

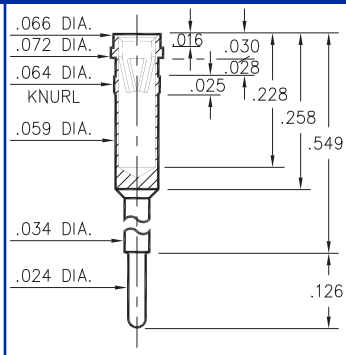


**1306-0-15-XX-47-XX-04-0**
Press-fit in .061 mounting hole.

## 7305

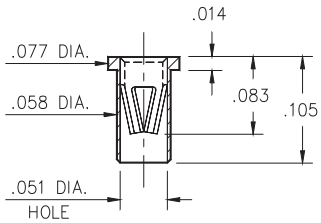


**7305-0-15-XX-47-XX-10-0**
Solder mount in .060 min. mounting hole.

## 0400

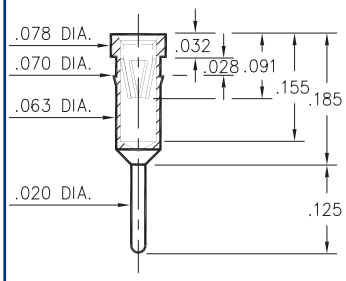


**0400-0-15-XX-47-XX-04-0**
Press-fit in .067 mounting hole.

## 0335

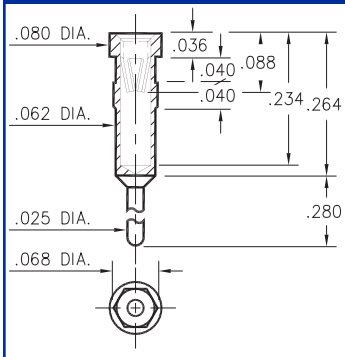


**0335-0-15-XX-47-XX-04-0**
Hex press-fit in .064 plated thru hole

## 4614

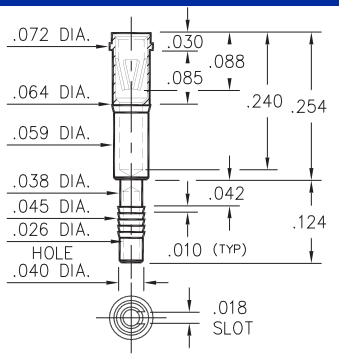


**4614-0-31-XX-47-XX-04-0**
Compliant press-fit in .040±.003 plated hole. For .060→.100 thick board.

## 4615

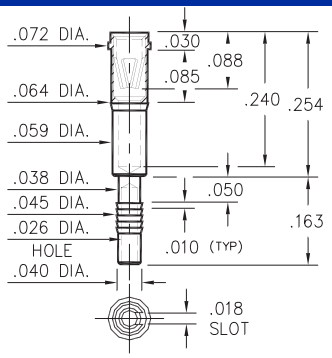


**4615-0-31-XX-47-XX-04-0**
Compliant press-fit in .040±.003 plated hole. For .090→.130 thick board.

## 7614

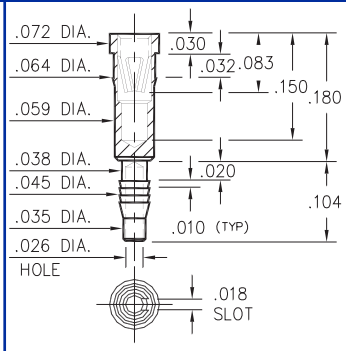


**7614-0-31-XX-47-XX-04-0**
Compliant press-fit in .040±.003 plated hole. For .060→.100 thick board.

## 8401

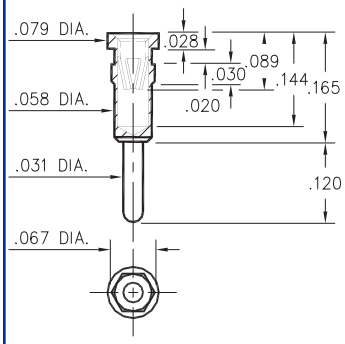


**8401-0-15-XX-47-XX-04-0**
Hex press-fit in .063 plated thru hole

## 2400

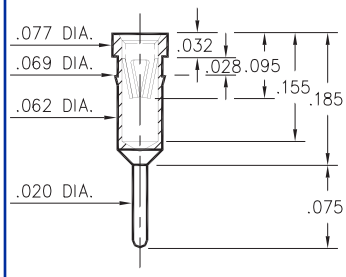


**2400-0-15-XX-47-XX-04-0**
Press-fit in .066 mounting hole.

## 6857

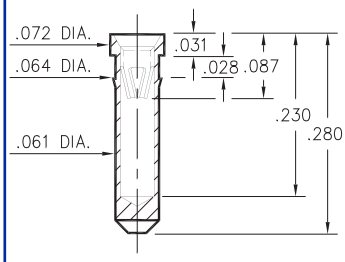


**6857-0-15-XX-47-XX-10-0**
Press-fit in .061 mounting hole.

## 9393

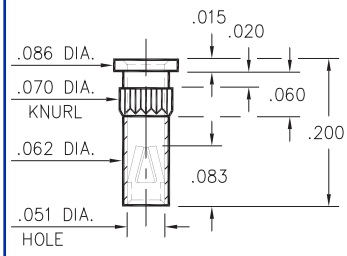


**9393-0-15-XX-47-XX-10-0**
Press-fit in .067 mounting hole.

## SPECIFICATIONS

**SHELL MATERIAL:**
Brass Alloy 360, 1/2 Hard

**CONTACT MATERIAL:**
Beryllium Copper Alloy 172, HT

**DIMENSION IN INCHES**
**TOLERANCES ON:**
LENGTHS: ±.005
DIAMETERS: ±.002
ANGLES: ± 2°

**ORDER CODE: XXXX - X - XX - XX - 47 - XX - XX - 0**

**BASIC PART #**

**SPECIFY SHELL FINISH:**
**01** 200μ" TIN/LEAD OVER NICKEL
◇ **80** 200μ" TIN OVER NICKEL (RoHS)
◇ **15** 10μ" GOLD OVER NICKEL (RoHS)

**SPECIFY CONTACT FINISH:**
**01** 200μ" TIN/LEAD OVER NICKEL
◇ **80** 200μ" TIN OVER NICKEL (RoHS)
◇ **27** 30μ" GOLD OVER NICKEL (RoHS)

RoHS 2002/95/EC

**CONTACT**
**#47** CONTACT (DATA ON PAGE 221)

# PIN RECEPTACLES
## for .025" - .037" diameter pins and .025" square pins

## 0401/6401

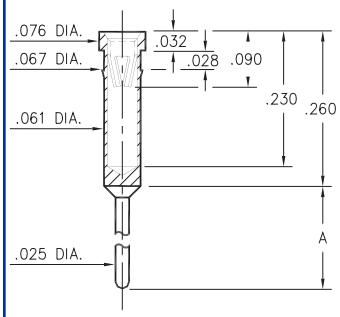


| Basic Part Number | Length A |
|---|---|
| 0401-0 | .340 |
| 6401-0 | .540 |

**X401-0-15-XX-47-XX-04-0**
Press-fit in .064 mounting hole

## 1303/8303

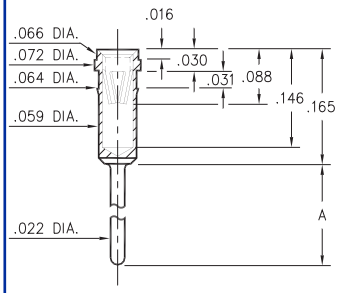


| Basic Part Number | Length A |
|---|---|
| 1303-0 | .125 |
| 8303-0 | .800 |

**X303-0-15-XX-47-XX-04-0**
Press-fit in .061 mounting hole

## 4095

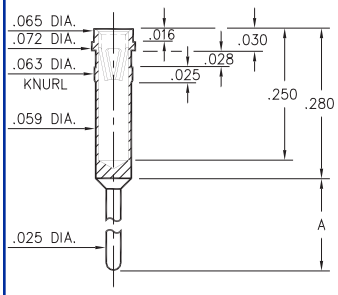


| Basic Part Number | Length A |
|---|---|
| 4095-0 | .635 |

**409X-0-15-XX-47-XX-04-0**
Press-fit in .061 mounting hole

## 8806

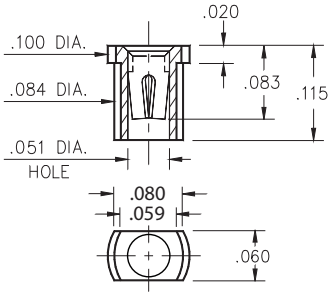


**8806-0-18-XX-47-XX-40-0**
Surface mount
Also available on 12mm wide carrier tape: 4,000 parts per 13" reel.
Order as: 8806-0-58-XX-47-XX-40-0

## SPECIFICATIONS

**SHELL MATERIAL:**
Brass Alloy 360, 1/2 Hard

**CONTACT MATERIAL:**
Beryllium Copper Alloy 172, HT

**DIMENSION IN INCHES**
**TOLERANCES ON:**
LENGTHS: ±.005
DIAMETERS: ±.002
ANGLES: ± 2°

**ORDER CODE: XXXX - X - 1X - XX - 47 - XX - XX - 0**

**BASIC PART #**

**SPECIFY SHELL FINISH:**
**01** 200μ" TIN/LEAD OVER NICKEL
◇ **80** 200μ" TIN OVER NICKEL (RoHS)
◇ **15** 10μ" GOLD OVER NICKEL (RoHS)

**SPECIFY CONTACT FINISH:**
**01** 200μ" TIN/LEAD OVER NICKEL
◇ **80** 200μ" TIN OVER NICKEL (RoHS)
◇ **27** 30μ" GOLD OVER NICKEL (RoHS)

RoHS 2002/95/EC

**CONTACT**
**#47** CONTACT (DATA ON PAGE 221)

## 0331/9353

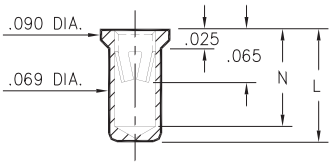


| Basic Part Number | Length L | Depth N |
|---|---|---|
| 0331-0 | .150 | .127 |
| 9353-0 | .170 | .147 |

**X3XX-X-15-XX-18-XX-10-0**
Solder mount in .071 min. mounting hole

## 7405

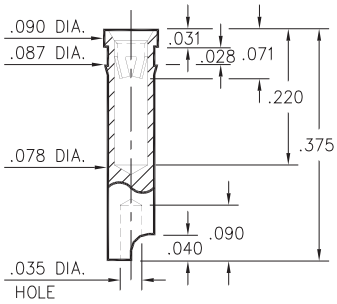


**7405-0-18-XX-18-XX-10-0**
Press-fit in .084 mounting hole

## 3450

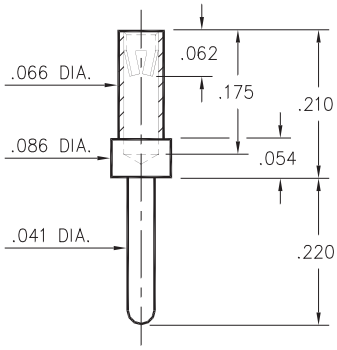


**3450-0-15-XX-18-XX-04-0**
Solder mount in .043 min. mounting hole

## 9354/7406

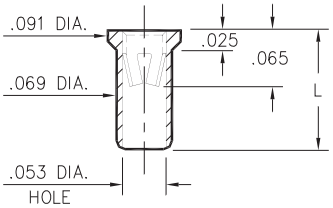


| Basic Part Number | Length L |
|---|---|
| 7406-0 | .120 |
| 9354-0 | .170 |

**XXXX-0-15-XX-18-XX-10-0**
Solder mount in .071 min. mounting hole

## 0319

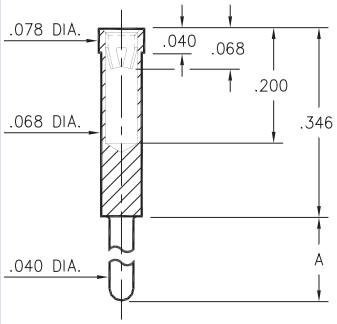


| Basic Part Number | Length A |
|---|---|
| 0319-0 | .240 |
| 0319-1 | .280 |

**0319-X-15-XX-18-XX-04-0**
Solder mount in .042 min. mounting hole

## 1313

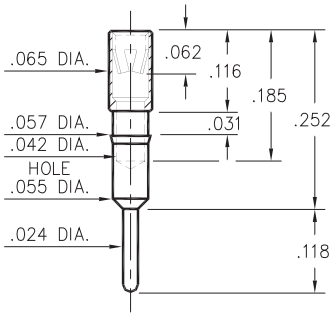


**1313-0-15-XX-18-XX-04-0**
Press-fit in .056 mounting hole

## 6628

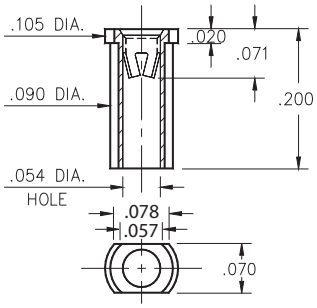


**6628-0-18-XX-18-XX-10-0**
Surface mount
Also available on 12mm wide carrier tape: 3,700 parts per 13" reel.
Order as: 6628-0-58-XX-18-XX-10-0

## 3520

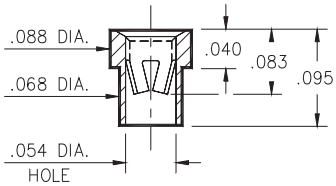


**3520-0-15-XX-18-XX-10-0**
Solder mount in .070 min. mounting hole

## 8331

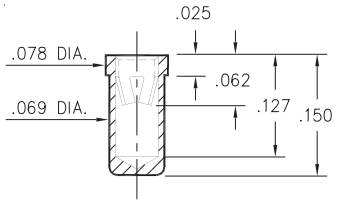


**8331-0-15-XX-18-XX-10-0**
Solder mount in .071 min. mounting hole

## SPECIFICATIONS

**SHELL MATERIAL:**
Brass Alloy 360, 1/2 Hard

**CONTACT MATERIAL:**
Beryllium Copper Alloy 172, HT

**DIMENSION IN INCHES**
**TOLERANCES ON:**
LENGTHS: ±.005
DIAMETERS: ±.002
ANGLES: ± 2°

**ORDER CODE: XXXX - X - 1X - XX - 18 - XX - XX - 0**

**BASIC PART #**

**SPECIFY SHELL FINISH:**
**01** 200μ" TIN/LEAD OVER NICKEL
◇ **80** 200μ" TIN OVER NICKEL (RoHS)
◇ **15** 10μ" GOLD OVER NICKEL (RoHS)

**SPECIFY CONTACT FINISH:**
**01** 200μ" TIN/LEAD OVER NICKEL
◇ **80** 200μ" TIN OVER NICKEL (RoHS)
◇ **27** 30μ" GOLD OVER NICKEL (RoHS)

RoHS 2002/95/EC

**CONTACT**
**#18** CONTACT (DATA ON PAGE 222)

## 0344

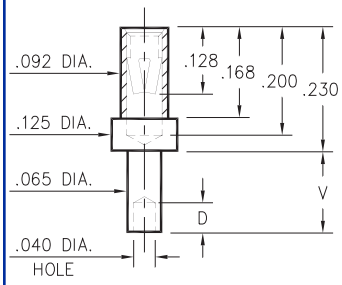


| Basic Part Number | Board Thick-ness | Length V | Depth D |
|---|---|---|---|
| 0344-1 | .031 | .062 | .040 |
| 0344-2 | .062 | .094 | .062 |
| 0344-3 | .094 | .125 | .062 |
| 0344-4 | .125 | .156 | .062 |

**0344-X-19-XX-34-XX-10-0**
Swage mount in .067 hole

## 0349

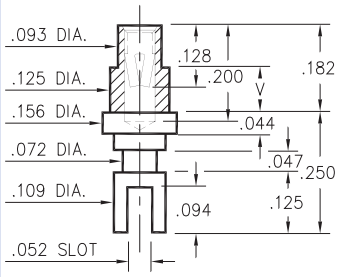


| Basic Part Number | Board Thickness | Length V |
|---|---|---|
| 0349-2 | .062 | .094 |
| 0349-3 | .094 | .125 |
| 0349-4 | .125 | .156 |

**0349-X-31-XX-34-XX-10-0**
Swage mount in .129 hole

## 0323/0324

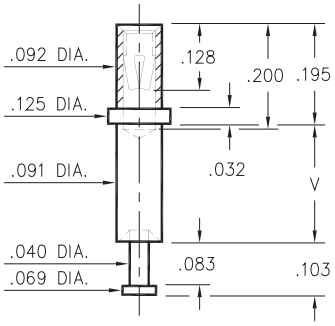


**0323-X-15-XX-34-XX-10-0**
Swage mount in .094 hole

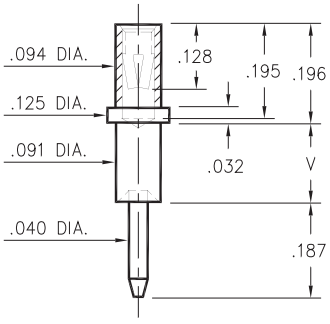


**0324-X-15-XX-34-XX-10-0**
Swage mount in .094 hole

| Basic Part Number | Board Thickness | Length V |
|---|---|---|
| 032X-1 | .031 | .062 |
| 032X-2 | .062 | .094 |
| 032X-3 | .094 | .125 |
| 032X-4 | .125 | .156 |
| 032X-5 | .188 | .219 |

## 0348

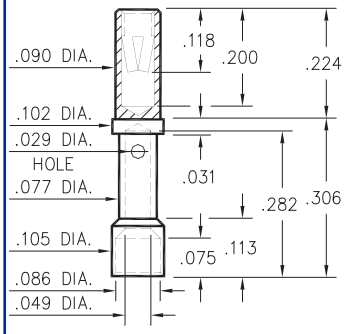


**0348-0-33-XX-34-XX-10-0**
#20A Crimp Barrel

## 0405

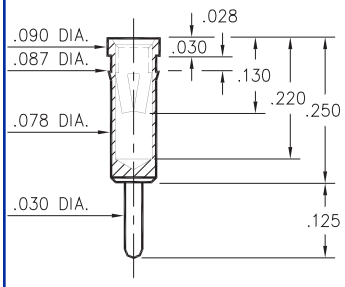


**0405-0-15-XX-34-XX-04-0**
Press-fit in .084 mounting hole

## 0336

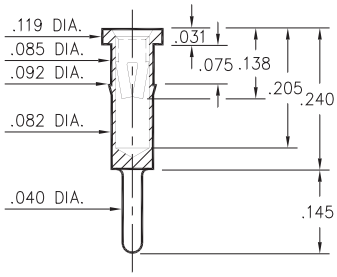


**0336-0-15-XX-34-XX-04-0**
Press-fit in .089 mounting hole

## 0322

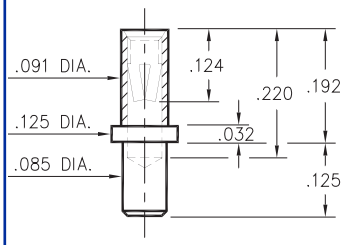


**0322-0-15-XX-34-XX-10-0**
Solder mount in .089 min. mounting hole

## 0325

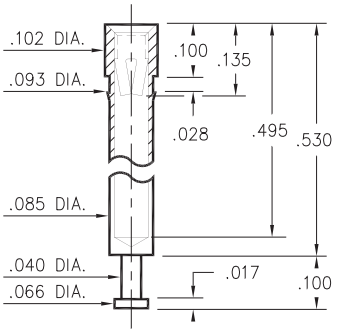


**0325-0-15-XX-34-XX-10-0**
Press-fit in .090 mounting hole

## SPECIFICATIONS

**SHELL MATERIAL:**
Brass Alloy 360, 1/2 Hard

**CONTACT MATERIAL:**
Beryllium Copper Alloy 172, HT

**DIMENSION IN INCHES**
**TOLERANCES ON:**
LENGTHS: ±.005
DIAMETERS: ±.002
ANGLES: ± 2°

**ORDER CODE: XXXX - X - XX - XX - 34 - XX - XX - 0**

**BASIC PART #**

**SPECIFY SHELL FINISH:**
**01** 200μ" TIN/LEAD OVER NICKEL
◇ **80** 200μ" TIN OVER NICKEL (RoHS)
◇ **15** 10μ" GOLD OVER NICKEL (RoHS)

**SPECIFY CONTACT FINISH:**
**01** 200μ" TIN/LEAD OVER NICKEL
◇ **80** 200μ" TIN OVER NICKEL (RoHS)
◇ **27** 30μ" GOLD OVER NICKEL (RoHS)

RoHS 2002/95/EC

**CONTACT**
**#34** CONTACT (DATA ON PAGE 222)

## 0327/0351/0373

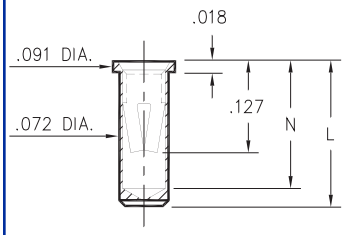


| Basic Part Number | Length L | Depth N |
|---|---|---|
| 0327-0 | .206 | .180 |
| 0351-0 | .226 | .200 |
| 0373-0 | .270 | .241 |

**03XX-0-15-XX-34-XX-10-0**
Solder mount in .075 min. mounting hole

## 0328

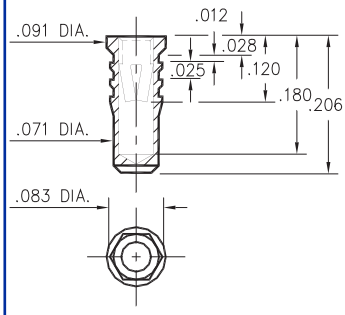


**0328-0-15-XX-34-XX-10-0**
Hex press-fit in .079 plated thru hole

## 0334

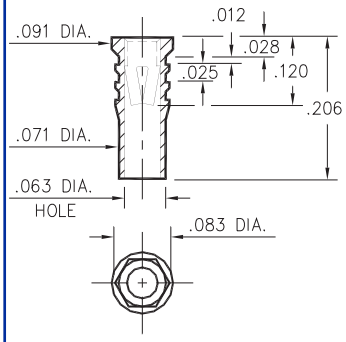


**0334-0-15-XX-34-XX-10-0**
Hex press-fit in .079 plated thru hole

## 0312

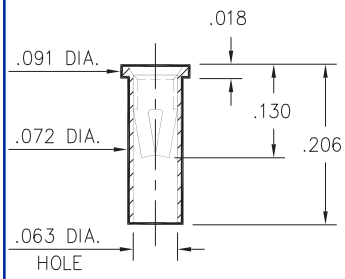


**0312-0-15-XX-34-XX-10-0**
Solder mount in .075 min. mounting hole

## 0333

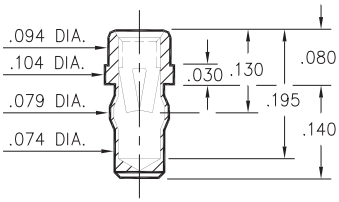


**0333-0-42-XX-34-XX-10-0**
Press-fit in .076 mounting hole

## 0357

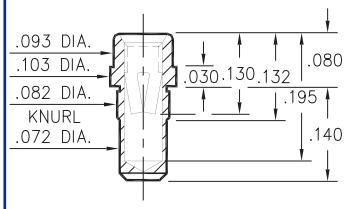


**0357-0-15-XX-34-XX-10-0**
Press-fit in .078 mounting hole

## 0317

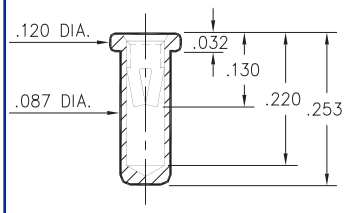


**0317-0-15-XX-34-XX-10-0**
Solder mount in .091min. mounting hole

## 0340

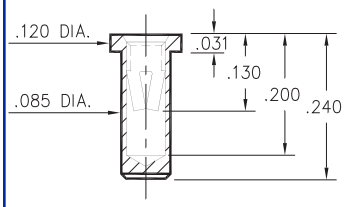


**0340-0-15-XX-34-XX-10-0**
Solder mount in .087 min. mounting hole

## 0345

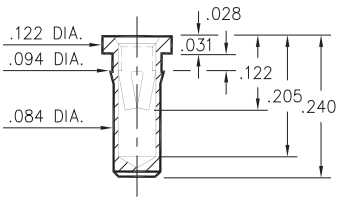


**0345-0-15-XX-34-XX-10-0**
Press-fit in .089 mounting hole

## 0316

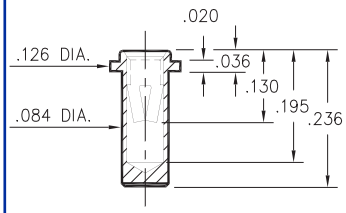


**0316-0-15-XX-34-XX-10-0**
Solder mount in .087 min. mounting hole

## 0314

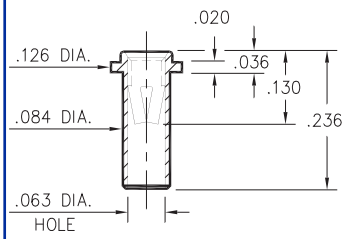


**0314-0-15-XX-34-XX-10-0**
Solder mount in .087 min. mounting hole

## SPECIFICATIONS

**SHELL MATERIAL:**
Brass Alloy 360, 1/2 Hard

**CONTACT MATERIAL:**
Beryllium Copper Alloy 172, HT

**DIMENSION IN INCHES**
**TOLERANCES ON:**
LENGTHS: ±.005
DIAMETERS: ±.002
ANGLES: ± 2°

**ORDER CODE: XXXX - X - XX - XX - 34 - XX - 10 - 0**

**BASIC PART #**

**SPECIFY SHELL FINISH:**
**01** 200μ" TIN/LEAD OVER NICKEL
◇ **80** 200μ" TIN OVER NICKEL (RoHS)
◇ **15** 10μ" GOLD OVER NICKEL (RoHS)

**SPECIFY CONTACT FINISH:**
**01** 200μ" TIN/LEAD OVER NICKEL
◇ **80** 200μ" TIN OVER NICKEL (RoHS)
◇ **27** 30μ" GOLD OVER NICKEL (RoHS)

RoHS 2002/95/EC

**CONTACT**
**#34** CONTACT (DATA ON PAGE 222)

# PIN RECEPTACLES
## for .032" - .046" diameter pins

## 0359

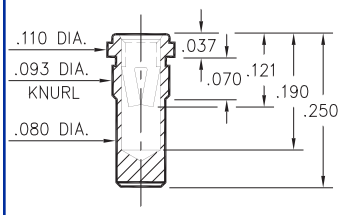


**0359-0-15-XX-34-XX-10-0**
Press-fit in .090 mounting hole

## 0358

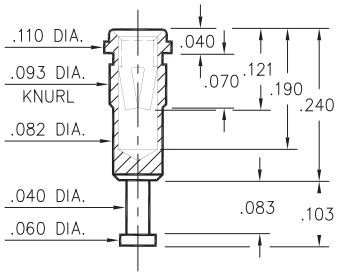


**0358-0-15-XX-34-XX-10-0**
Press-fit in .090 mounting hole

## 0360

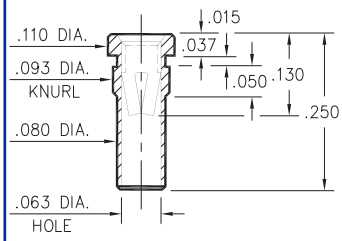


**0360-0-15-XX-34-XX-10-0**
Press-fit in .090 mounting hole

## 0343

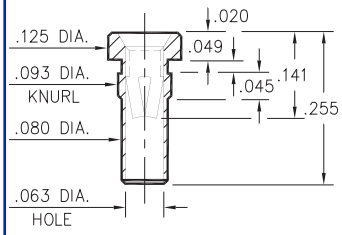


**0343-0-15-XX-34-XX-10-0**
Press-fit in .090 mounting hole

## 0356

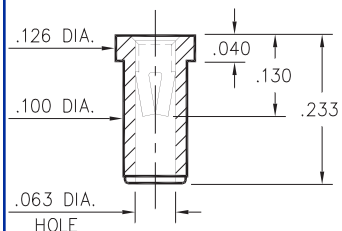


**0356-0-15-XX-34-XX-10-0**
Solder mount in .102 min. mounting hole

## 6659

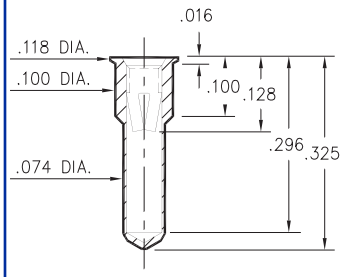


**6659-0-15-XX-34-XX-10-0**
Solder mount in .102 min. mounting hole

## 0347

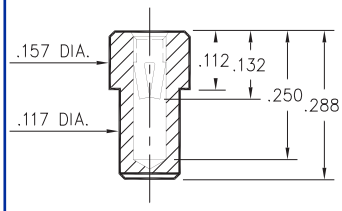


**0347-0-15-XX-34-XX-10-0**
Solder mount in .120 min. mounting hole

## 0329

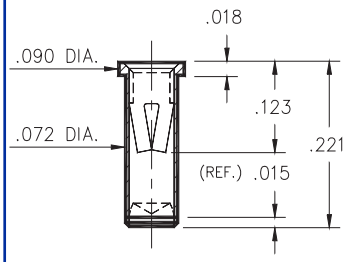


**0329-0-15-XX-34-XX-10-0**
Solder mount in .075 min. mounting hole. "knock out" bottom.

## 0814

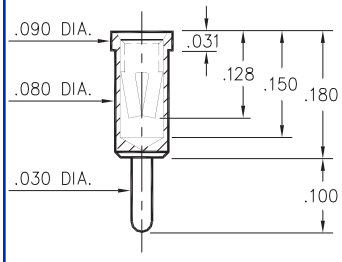


**0814-0-15-XX-34-XX-04-0**
Solder mount in .082 min. mounting hole

## 5059

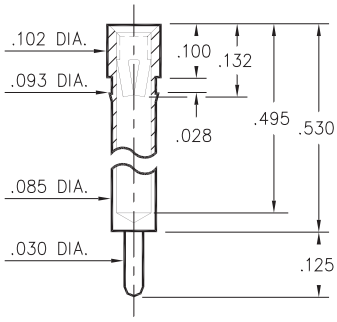


**5059-0-15-XX-34-XX-04-0**
Press-fit in .090 mounting hole

## 8360

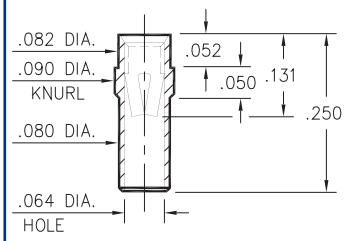


**8360-0-15-XX-34-XX-10-0**
Press-fit in .087 mounting hole

## 9359

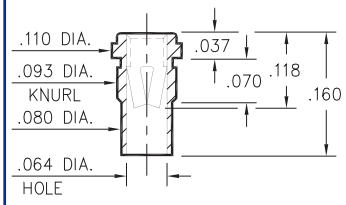


**9359-0-15-XX-34-XX-10-0**
Press-fit in .090 mounting hole

## SPECIFICATIONS

**SHELL MATERIAL:**
Brass Alloy 360, 1/2 Hard

**CONTACT MATERIAL:**
Beryllium Copper Alloy 172, HT

**DIMENSION IN INCHES**
**TOLERANCES ON:**
LENGTHS: ±.005
DIAMETERS: ±.002
ANGLES: ± 2°

**ORDER CODE: XXXX - X - 15 - XX - 34 - XX - XX - 0**

**BASIC PART #**

**SPECIFY SHELL FINISH:**
**01** 200μ" TIN/LEAD OVER NICKEL
◇ **80** 200μ" TIN OVER NICKEL (RoHS)
◇ **15** 10μ" GOLD OVER NICKEL (RoHS)

**SPECIFY CONTACT FINISH:**
**01** 200μ" TIN/LEAD OVER NICKEL
◇ **80** 200μ" TIN OVER NICKEL (RoHS)
◇ **27** 30μ" GOLD OVER NICKEL (RoHS)

RoHS 2002/95/EC

**CONTACT**
**#34** CONTACT (DATA ON PAGE 222)

# PIN RECEPTACLES
## for .032" - .046" diameter pins (#34 contact)

## 8838

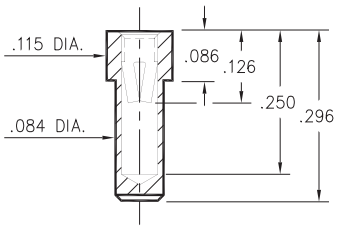


**8838-0-15-XX-34-XX-10-0**
Solder mount in .086 min. mounting hole

## 3100

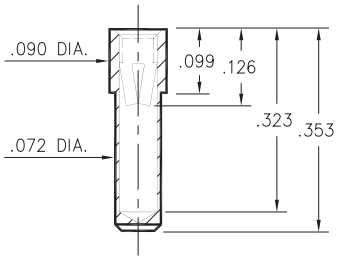


**3100-0-15-XX-34-XX-10-0**
Solder mount in .074 min. mounting hole

## 8853

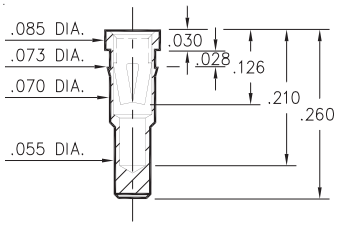


**8853-0-15-XX-34-XX-10-0**
Press-fit in .071 mounting hole

## 6800

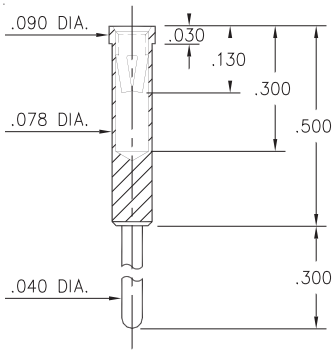


**6800-0-15-XX-34-XX-04-0**
Solder mount in .080 min. mounting hole

## 8206

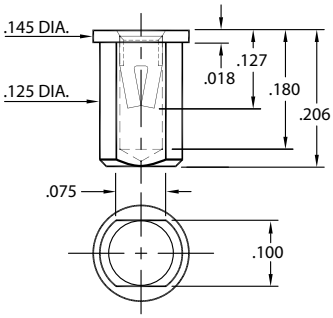


**8206-0-15-XX-34-XX-40-0**
Surface mount

## 0739

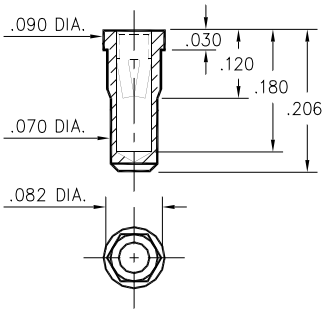


**0739-0-15-XX-34-XX-10-0**
Hex press-fit in .078±.002 plated thru hole

## SPECIFICATIONS

**SHELL MATERIAL:**
Brass Alloy 360, 1/2 Hard

**CONTACT MATERIAL:**
Beryllium Copper Alloy 172, HT

**DIMENSION IN INCHES**
**TOLERANCES ON:**
LENGTHS: ±.005
DIAMETERS: ±.002
ANGLES: ± 2°

**ORDER CODE: XXXX - X - 15 - XX - 34 - XX - XX - 0**

**BASIC PART #**

**SPECIFY SHELL FINISH:**
**01** 200μ" TIN/LEAD OVER NICKEL
◇ **80** 200μ" TIN OVER NICKEL (RoHS)
◇ **15** 10μ" GOLD OVER NICKEL (RoHS)

**SPECIFY CONTACT FINISH:**
**01** 200μ" TIN/LEAD OVER NICKEL
◇ **80** 200μ" TIN OVER NICKEL (RoHS)
◇ **27** 30μ" GOLD OVER NICKEL (RoHS)

RoHS 2002/95/EC

**CONTACT**
**#34** CONTACT (DATA ON PAGE 222)

# PIN RECEPTACLES
## for .040” - .050” diameter pins

## 0355

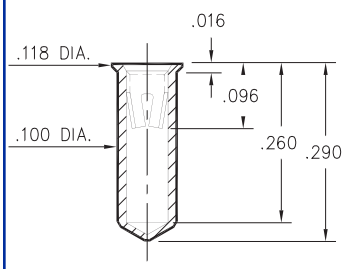


**0355-0-15-XX-02-XX-10-0**
Solder mount in .102 min. mounting hole

## 0354

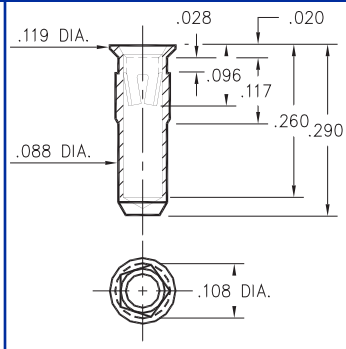


**0354-0-15-XX-02-XX-10-0**
Pentagonal press-fit in .104 min. plated thru hole

## 3490

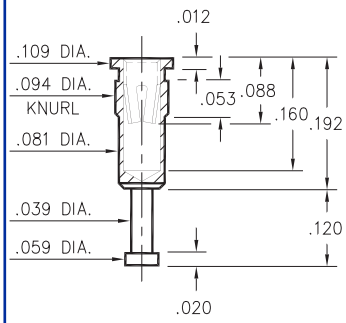


**3490-0-15-XX-02-XX-10-0**
Press-fit in .091 mounting hole

## 3808

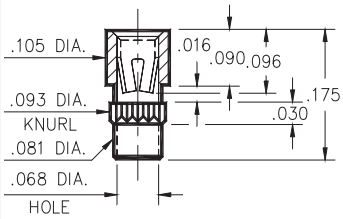


**3808-0-15-XX-02-XX-10-0**
Press-fit in .090 mounting hole

## 9184

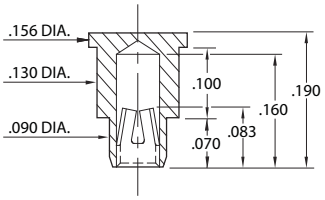


**9184-0-15-XX-02-XX-40-0**
Bottom entry, surface mount
.092 min. plated thru hole.
Also available on carrier tape,
Order as: 9184-0-57-XX-02-XX-40-0

## 9222

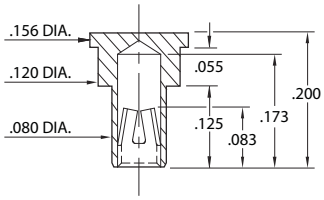


**9222-2-15-XX-02-XX-40-0**
Bottom entry, surface mount
.082 min. plated thru hole
Also available on carrier tape,
Order as: 9222-2-57-XX-02-XX-40-0

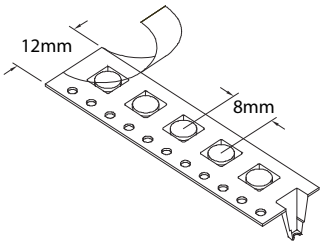


Carrier tape format for
9184 & 9222.
1,500 pieces per 13” reel

## SPECIFICATIONS

**SHELL MATERIAL:**
Brass Alloy 360, 1/2 Hard

**CONTACT MATERIAL:**
Beryllium Copper Alloy 172, HT

**DIMENSION IN INCHES**
**TOLERANCES ON:**
LENGTHS: ±.005
DIAMETERS: ±.002
ANGLES: ± 2°

**ORDER CODE: XXXX - X - 15 - XX - 02 - XX - XX - 0**

**BASIC PART #**

**SPECIFY SHELL FINISH:**
**01** 200µ” TIN/LEAD OVER NICKEL
◇ **80** 200µ” TIN OVER NICKEL (RoHS)
◇ **15** 10µ” GOLD OVER NICKEL (RoHS)

**SPECIFY CONTACT FINISH:**
**01** 200µ” TIN/LEAD OVER NICKEL
◇ **80** 200µ” TIN OVER NICKEL (RoHS)
◇ **27** 30µ” GOLD OVER NICKEL (RoHS)

RoHS 2002/95/EC

**CONTACT**
**#02** CONTACT (DATA ON PAGE 223)

# PIN RECEPTACLES
## for .040" - .060" diameter pins (#03 contact) and .059" - .063" diameter pins (#42 contact)

## 0433/8433

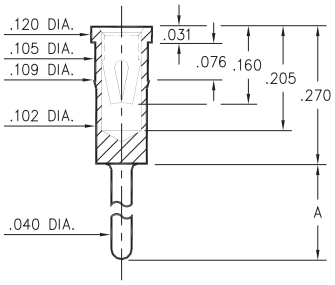


| Basic Part Number | Length A |
|---|---|
| 0433-0 | .120 |
| 8433-0 | .330 |

**X433-0-15-XX-03-XX-04-0**
Press-fit in .106 mounting hole

## 0435/0436

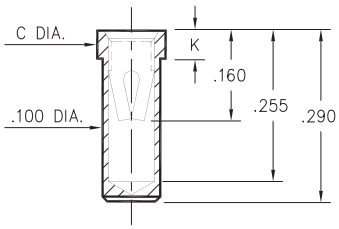


| Basic Part Number | Dia. C | Length K |
|---|---|---|
| 0435-0-15-XX-03-XX-10-0 | .118 | .050 |
| 0436-0 | .125 | .070 |

**0435-0-15-XX-03-XX-10-0**
Solder mount in .102 min. mounting hole
Also available on 24mm wide carrier tape: 950 parts per 13" reel.
Order as: 0435-0-57-XX-03-XX-10-0

## 0434

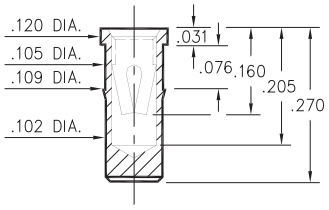


**0434-0-15-XX-03-XX-10-0**
Press-fit in .106 mounting hole

## 4064

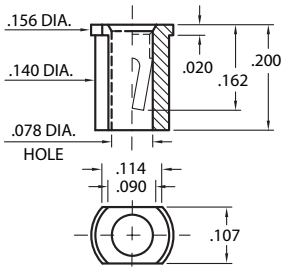


**4064-0-18-XX-03-XX-40-0**
Surface mount
Also available on 16mm wide carrier tape: 2,400 parts per 13" reel.
Order as: 4064-0-58-XX-03-XX-40-0

## 0342

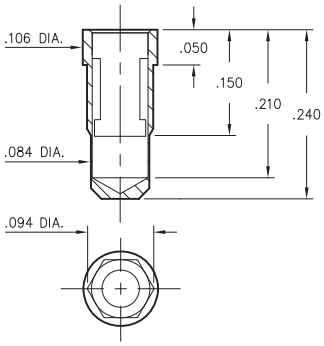


**0342-0-15-XX-42-XX-10-0**
Hex press-fit in .090±.002 plated thru hole

- 0342 receptacle uses Mill-Max's new #42 Contact. This receptacle will accept the Ø.061±.002 power pins of ¼ brick DC/DC converters.
- #42 contact can be ordered in standard receptacles that use #03 contact; or it can be specified as the spring element inside custom made receptacles.

**Mechanical Data #42 Contact:**
**Insertion/Extraction Force** with a Ø.061 (nominal) pin**:**

| First Cycle | | 2nd & Subsequent Cycles | |
|---|---|---|---|
| Insertion Force | Extraction Force | Insertion Force | Extraction Force |
| 20N | 6N | 10N | 6N |

**Compliancy Test** (the "spring back" characteristic of the contact to accept Ø.059 small pin after insertion of a Ø.063 large pin) :

| Initial Cycle with Ø.059 pin | | Second Cycle with Ø.063 pin | | Third Cycle with Ø.059 pin | |
|---|---|---|---|---|---|
| Ins. Force | Ext. Force | Ins. Force | Ext. Force | Ins. Force | Ext. Force |
| 18N | 6N | 22N | 7N | 3N | 2N |

(Insertion/Extraction Forces are in Newtons and measured with polished steel gage pins having elliptical shaped tips).

## SPECIFICATIONS

**SHELL MATERIAL:**
Brass Alloy 360, 1/2 Hard

**CONTACT MATERIAL:**
Beryllium Copper Alloy 172, HT

**DIMENSION IN INCHES**
**TOLERANCES ON:**
LENGTHS: ±.005
DIAMETERS: ±.002
ANGLES: ± 2°

**ORDER CODE: XXXX - X - 1X - XX - XX - XX - XX - 0**

**BASIC PART #**

**SPECIFY SHELL FINISH:**
**01** 200μ" TIN/LEAD OVER NICKEL
◇ **80** 200μ" TIN OVER NICKEL (RoHS)
◇ **15** 10μ" GOLD OVER NICKEL (RoHS)

**SPECIFY CONTACT FINISH:**
**01** 200μ" TIN/LEAD OVER NICKEL
◇ **80** 200μ" TIN OVER NICKEL (RoHS)
◇ **27** 30μ" GOLD OVER NICKEL (RoHS)

RoHS 2002/95/EC

**SELECT CONTACT**
**#03 or #42** CONTACT (DATA ON PAGE 224)

# PIN RECEPTACLES
## for .048” - .064” diameter pins (#13 contact) and .045” - .065” diameter pins (#23 contact)

## 0364

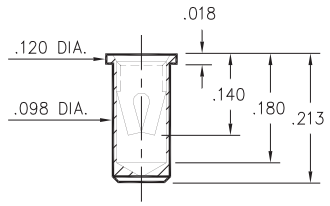


**0364-0-15-XX-13-XX-10-0**
Solder mount in .100 min. mounting hole
Also available on 16mm wide carrier tape: 1,300 parts per 13” reel.
Order as: 0364-0-57-XX-13-XX-10-0

## 0363

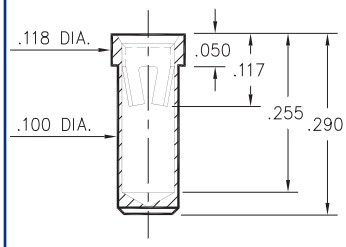


**0363-0-15-XX-23-XX-10-0**
Solder mount in .102 min. mounting hole

## 0365

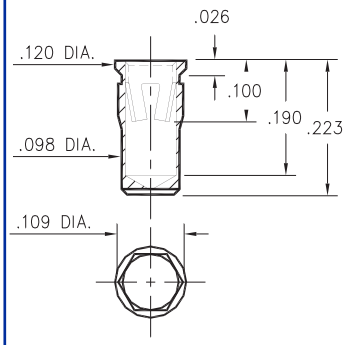


**0365-0-15-XX-23-XX-10-0**
Hex press-fit in .105 plated thru hole

## 0366

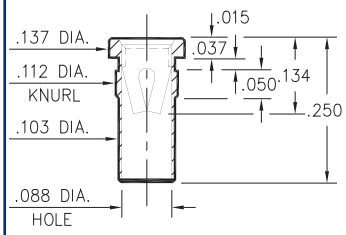


**0366-0-15-XX-13-XX-10-0**
Press-fit in .109 mounting hole

## 0372

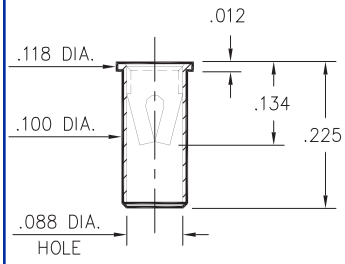


**0372-0-15-XX-13-XX-10-0**
Solder mount in .102 min. mounting hole

## 0362

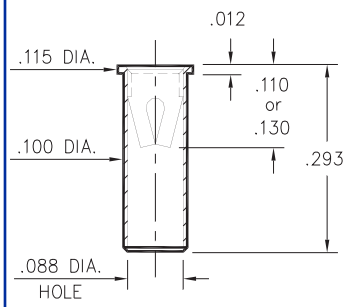


**0362-0-15-XX-X3-XX-10-0**
Solder mount in .102 min. mounting hole

## 0367

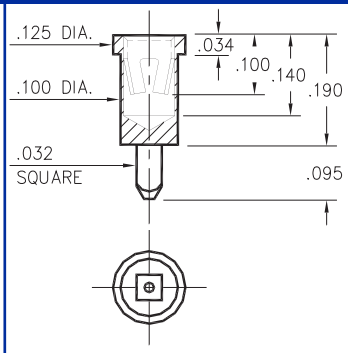


**0367-0-15-XX-23-XX-10-0**
Square press-fit in .040 plated thru hole

## 9324

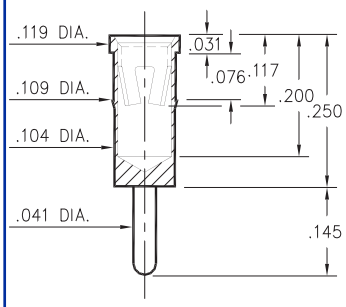


**9324-0-15-XX-23-XX-04-0**
Press-fit in .106 mounting hole

## 0492

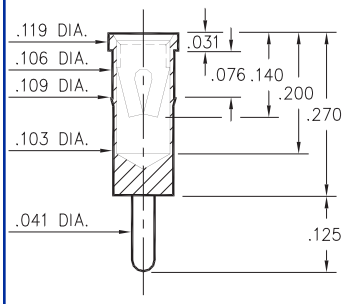


**0492-0-15-XX-13-XX-04-0**
Press-fit in .106 mounting hole

## 0381

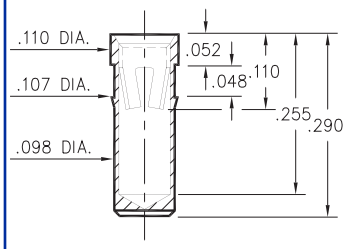


**0381-0-15-XX-23-XX-10-0**
Press-fit in .104 mounting hole

## 4034

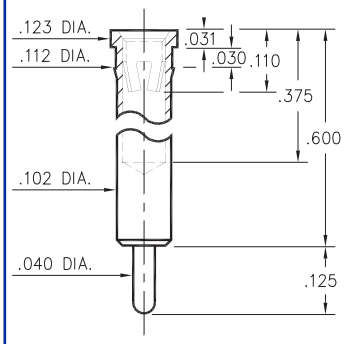


**4034-0-15-XX-23-XX-04-0**
Press-fit in .109 mounting hole

## 3044

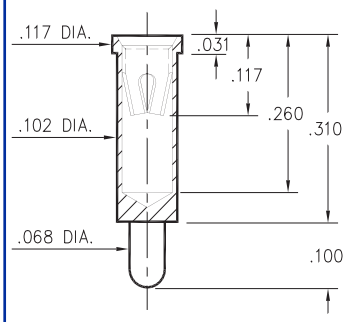


**3044-0-15-XX-23-XX-04-0**
Solder mount in .104 min. mounting hole

## SPECIFICATIONS

**SHELL MATERIAL:**
Brass Alloy 360, 1/2 Hard

**CONTACT MATERIAL:**
Beryllium Copper Alloy 172, HT

**DIMENSION IN INCHES**
**TOLERANCES ON:**
LENGTHS: ±.005
DIAMETERS: ±.002
ANGLES: ± 2°

**ORDER CODE: XXXX - X - 15 - XX - XX - XX - XX - 0**

**BASIC PART #**

**SPECIFY SHELL FINISH:**
**01** 200µ” TIN/LEAD OVER NICKEL
◇ **80** 200µ” TIN OVER NICKEL (RoHS)
◇ **15** 10µ” GOLD OVER NICKEL (RoHS)

**SPECIFY CONTACT FINISH:**
**01** 200µ” TIN/LEAD OVER NICKEL
◇ **80** 200µ” TIN OVER NICKEL (RoHS)
◇ **27** 30µ” GOLD OVER NICKEL (RoHS)

RoHS 2002/95/EC

**SELECT CONTACT**
**#13 or #23** CONTACT (DATA ON PAGES 224 & 225)

# PIN RECEPTACLES
## for .048" - .064" diameter pins (#13 contact) and .045" - .065" diameter pins (#23 contact)

## 0496

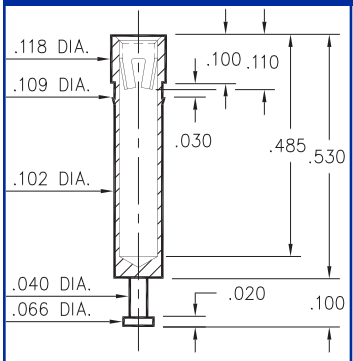


**0496-0-15-XX-23-XX-10-0**
Press-fit in .106 mounting hole

## 0368

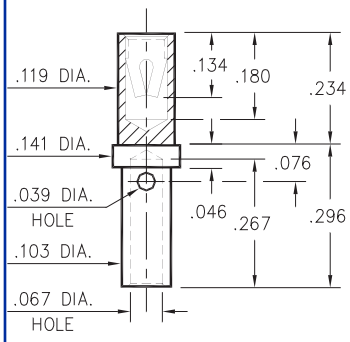


**0368-0-33-XX-13-XX-10-0**
#16A Crimp Barrel

## 8067

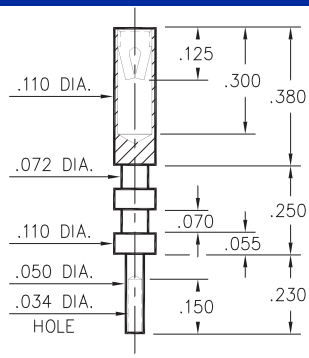


**8067-0-19-XX-13-XX-10-0**
Wire Termination

## 1105

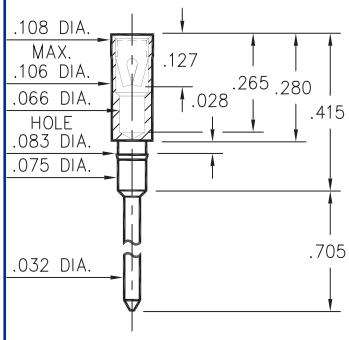


**1105-0-15-XX-13-XX-04-0**
Press-fit in .080 mounting hole

## 8730

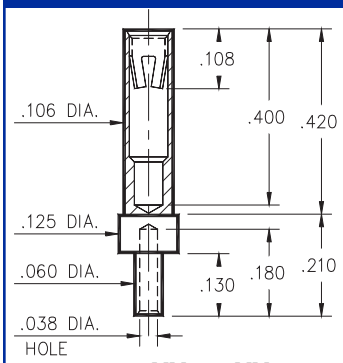


**8730-0-19-XX-23-XX-10-0**
Wire Termination

## 3667

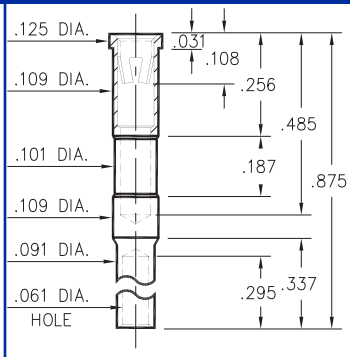


**3667-0-19-XX-23-XX-10-0**
Wire Termination

## 9372

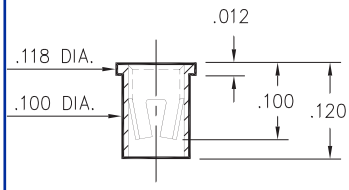


**9372-0-15-XX-23-XX-10-0**
Solder mount in .102 min. mounting hole

## 4582

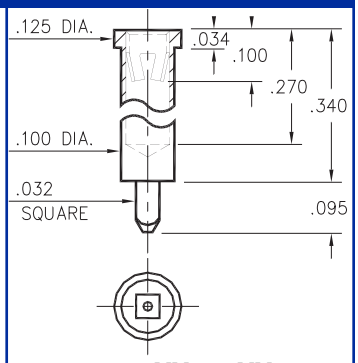


**4582-0-15-XX-23-XX-10-0**
Square press-fit in .040 plated thru hole

## 5834

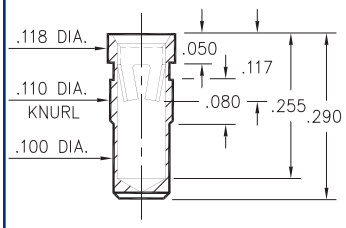


**5834-0-15-XX-23-XX-10-0**
Press-fit in .107 mounting hole

## 9401

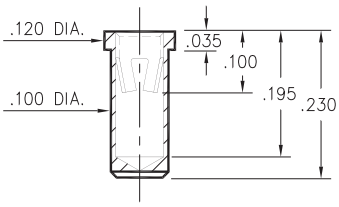


**9401-0-15-XX-23-XX-10-0**
Solder mount in .102 min. mounting hole
Also available on 24mm wide carrier tape: 1,100 parts per 13" reel.
Order as: 9401-0-57-XX-23-XX-10-0

## 9801

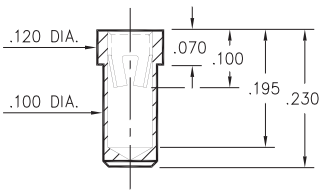


**9801-0-15-XX-23-XX-10-0**
Solder mount in .102 min. mounting hole
Also available on 16mm wide carrier tape: 1,200 parts per 13" reel.
Order as: 9801-0-57-XX-23-XX-10-0

## 8829

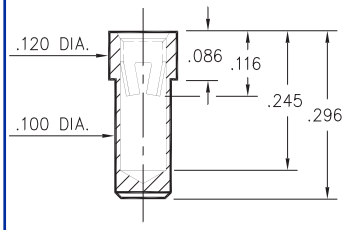


**8829-0-15-XX-23-XX-10-0**
Solder mount in .102 min. mounting hole

## SPECIFICATIONS

**SHELL MATERIAL:**
Brass Alloy 360, 1/2 Hard

**CONTACT MATERIAL:**
Beryllium Copper Alloy 172, HT

**DIMENSION IN INCHES**
**TOLERANCES ON:**
LENGTHS: ±.005
DIAMETERS: ±.002
ANGLES: ± 2°

**ORDER CODE: XXXX - X - XX - XX - XX - XX - XX - 0**

**BASIC PART #**

**SPECIFY SHELL FINISH:**
**01** 200μ" TIN/LEAD OVER NICKEL
◇ **80** 200μ" TIN OVER NICKEL (RoHS)
◇ **15** 10μ" GOLD OVER NICKEL (RoHS)

**SPECIFY CONTACT FINISH:**
**01** 200μ" TIN/LEAD OVER NICKEL
◇ **80** 200μ" TIN OVER NICKEL (RoHS)
◇ **27** 30μ" GOLD OVER NICKEL (RoHS)

RoHS 2002/95/EC

**SELECT CONTACT**
**#13 or #23** CONTACT (DATA ON PAGES 224 & 225)

# PIN RECEPTACLES
## for .048" - .064" diameter pins (#13 contact)
## for .045" - .065" diameter pins (#23 contact)

## 8365

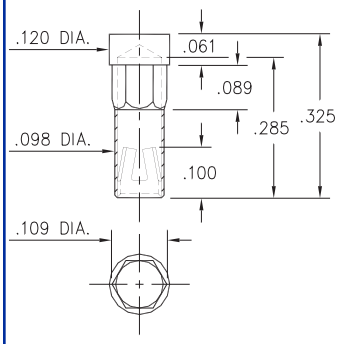


**8365-0-15-XX-13-XX-10-0**
Hex-pressfit in .106 plated thru hole.

## 8996

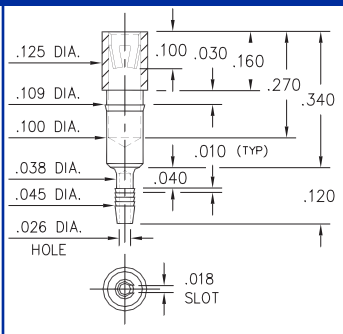


**8996-0-31-XX-13-XX-04-0**
Compliant press-fit in .040±.003 plated hole. For .060→.100 thick board.

## 9064

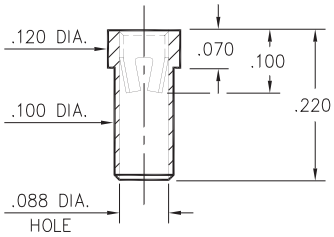


**9064-0-15-XX-13-XX-10-0**
Solder mount in .102 min. mounting hole

## 9280

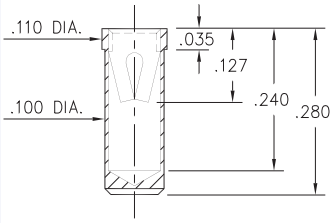


**9280-0-15-XX-13-XX-10-0**
Solder mount in .102 min. mounting hole

## 4900

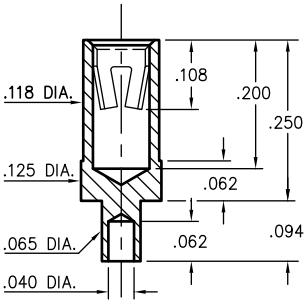


**4900-0-19-XX-23-XX-10-0**
Swage mount in .067 hole

## SPECIFICATIONS

**SHELL MATERIAL:**
Brass Alloy 360, 1/2 Hard

**CONTACT MATERIAL:**
Beryllium Copper Alloy 172, HT

**DIMENSION IN INCHES**
**TOLERANCES ON:**
LENGTHS: ±.005
DIAMETERS: ±.002
ANGLES: ± 2°

**ORDER CODE: XXXX - X - XX - XX - XX - XX - XX - 0**

**BASIC PART #**

**SPECIFY SHELL FINISH:**
**01** 200μ" TIN/LEAD OVER NICKEL
◇ **80** 200μ" TIN OVER NICKEL (RoHS)
◇ **15** 10μ" GOLD OVER NICKEL (RoHS)

**SPECIFY CONTACT FINISH:**
**01** 200μ" TIN/LEAD OVER NICKEL
◇ **80** 200μ" TIN OVER NICKEL (RoHS)
◇ **27** 30μ" GOLD OVER NICKEL (RoHS)

RoHS 2002/95/EC

**SELECT CONTACT**
**#13 or #23** CONTACT (DATA ON PAGES 224 & 225)

# PIN RECEPTACLES
## for .065" - .082" diameter pins

## 0394

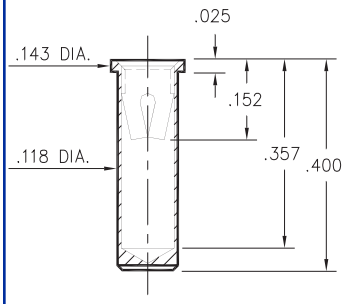


**0394-0-15-XX-07-XX-10-0**
Solder mount in .120 min. mounting hole

## 0393

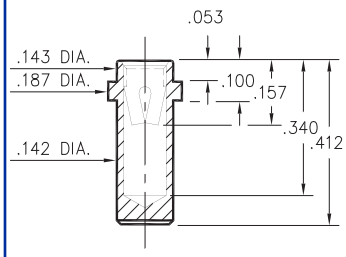


**0393-0-15-XX-07-XX-10-0**
Solder mount in .144 min. mounting hole

## 0391

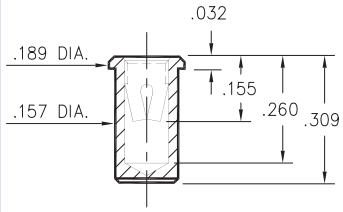


**0391-0-15-XX-07-XX-10-0**
Solder mount in .159 min. mounting hole

## 9016

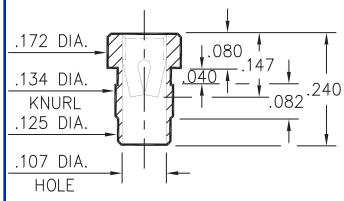


**9016-0-15-XX-07-XX-10-0**
Press-fit in .131 mounting hole

## 0493

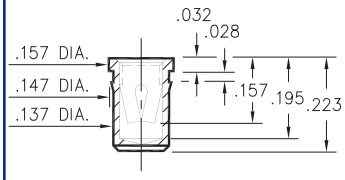


**0493-0-15-XX-07-XX-10-0**
Press-fit in .144 mounting hole

## 0490

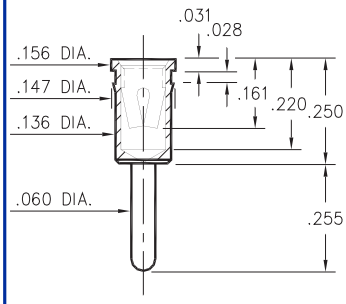


**0490-0-15-XX-07-XX-04-0**
Press-fit in .144 mounting hole

## 0616

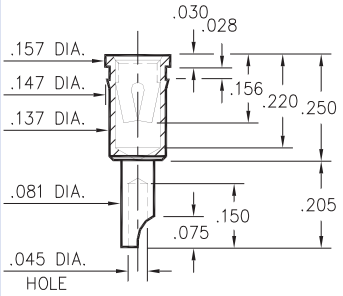


**0616-0-18-XX-07-XX-10-0**
Press-fit in .144 mounting hole

## 0387

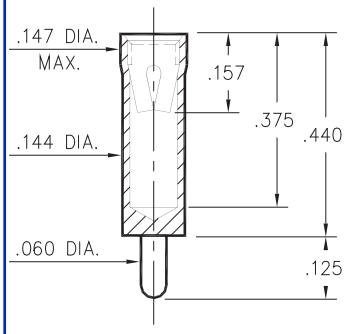


**0387-0-15-XX-07-XX-04-0**
Solder mount in .063 min. mounting hole

## 0370

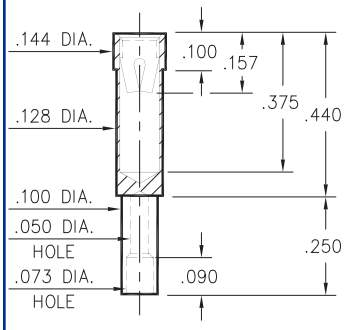


**0370-0-19-XX-07-XX-10-0**
#18 Gage crimp barrel

## 4040

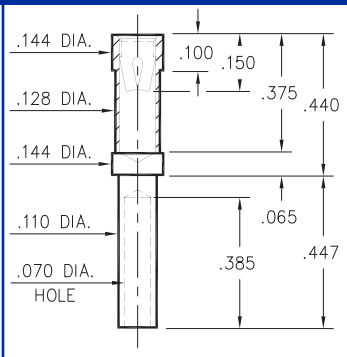


**4040-0-19-XX-07-XX-10-0**
Wire Termination

## 0491

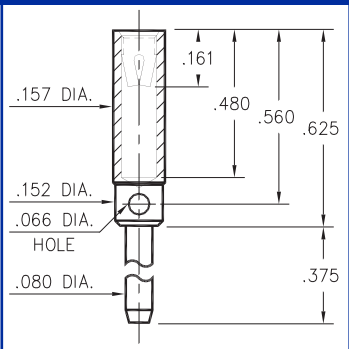


**0491-0-19-XX-07-XX-04-0**
For use in stackable patch cords

## 9214

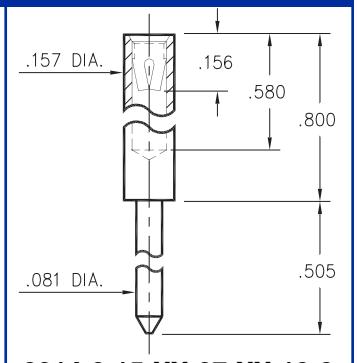


**9214-0-15-XX-07-XX-10-0**
Solder mount in .083 min. mounting hole

## SPECIFICATIONS

**SHELL MATERIAL:**
Brass Alloy 360, 1/2 Hard

**CONTACT MATERIAL:**
Beryllium Copper Alloy 172, HT

**DIMENSION IN INCHES**
**TOLERANCES ON:**
LENGTHS: ±.005
DIAMETERS: ±.002
ANGLES: ± 2°

**ORDER CODE: XXXX - X - 1X - XX - 07 - XX - XX - 0**

**BASIC PART #**

**SPECIFY SHELL FINISH:**
**01** 200μ" TIN/LEAD OVER NICKEL
◇ **80** 200μ" TIN OVER NICKEL (RoHS)
◇ **15** 10μ" GOLD OVER NICKEL (RoHS)

**SPECIFY CONTACT FINISH:**
**01** 200μ" TIN/LEAD OVER NICKEL
◇ **80** 200μ" TIN OVER NICKEL (RoHS)
◇ **27** 30μ" GOLD OVER NICKEL (RoHS)

RoHS 2002/95/EC

**CONTACT**
**#07** CONTACT (DATA ON PAGE 222)

## 0395

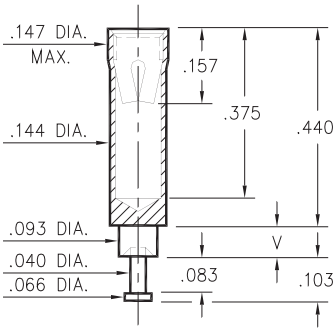


| Basic Part Number | Board Thickness | Length V |
|---|---|---|
| 0395-1 | .031 | .062 |
| 0395-2 | .062 | .094 |
| 0395-3 | .094 | .125 |
| 0395-4 | .125 | .156 |
| 0395-5 | .188 | .219 |

**0395-X-15-XX-07-XX-10-0**
Swage mount in .096 hole

## 8016

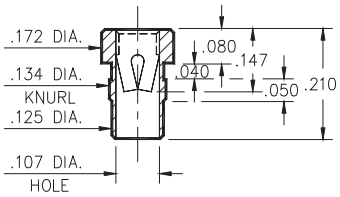


**8016-0-15-XX-07-XX-10-0**
Press-fit in .131 mounting hole

## 0350

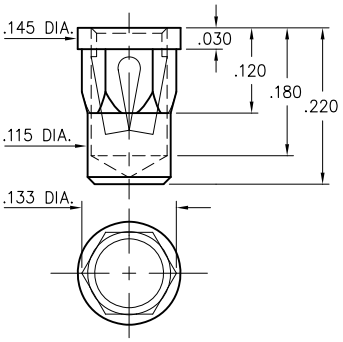


**0350-0-15-XX-07-XX-10-0**
Hex press-fit in .129±.002
plated thru hole

## 8837

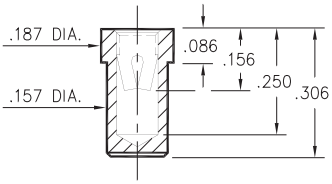


**8837-0-15-XX-14-XX-10-0**
Solder mount in .159 min.
mounting hole

## SPECIFICATIONS

**SHELL MATERIAL:**
Brass Alloy 360, 1/2 Hard

**CONTACT MATERIAL:**
Beryllium Copper Alloy 172, HT

**DIMENSION IN INCHES**
**TOLERANCES ON:**
LENGTHS: ±.005
DIAMETERS: ±.002
ANGLES: ± 2°

**ORDER CODE: XXXX - X - 15 - XX - XX - XX - 10 - 0**

**BASIC PART #**

**SPECIFY SHELL FINISH:**
**01** 200μ" TIN/LEAD OVER NICKEL
◇ **80** 200μ" TIN OVER NICKEL (RoHS)
◇ **15** 10μ" GOLD OVER NICKEL (RoHS)

**SPECIFY CONTACT FINISH:**
**01** 200μ" TIN/LEAD OVER NICKEL
◇ **80** 200μ" TIN OVER NICKEL (RoHS)
◇ **27** 30μ" GOLD OVER NICKEL (RoHS)

RoHS 2002/95/EC

**SELECT CONTACT**
**#07 or #14** CONTACT (DATA ON PAGES 225 & 226)

## 0388

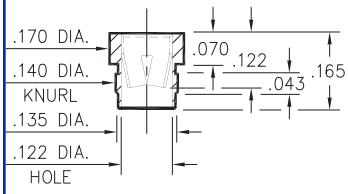


**0388-0-15-XX-08-XX-10-0**
Press-fit in .138 mounting hole

## 0390

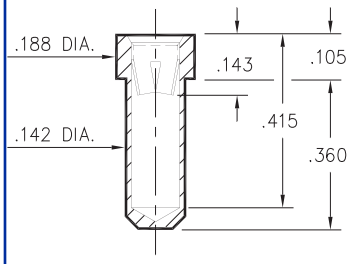


**0390-0-15-XX-08-XX-10-0**
Solder mount in .144 min. mounting hole

## 0389

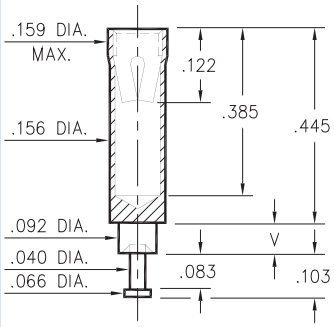


| Basic Part Number | Board Thickness | Length V |
|---|---|---|
| 0389-2 | .062 | .094 |
| 0389-3 | .094 | .125 |
| 0389-4 | .125 | .156 |

**0389-X-15-XX-08-XX-10-0**
Swage mount in .094 hole

## 8963

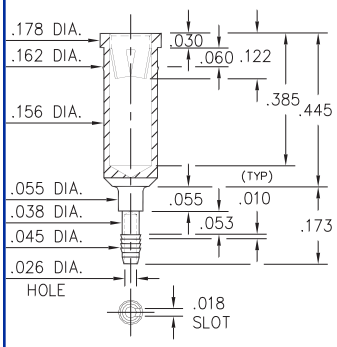


**8963-0-31-XX-08-XX-04-0**
Compliant press-fit in .040±.003 plated hole. For .060→.100 thick board.

## SPECIFICATIONS

**SHELL MATERIAL:**
Brass Alloy 360, 1/2 Hard

**CONTACT MATERIAL:**
Beryllium Copper Alloy 172, HT

**DIMENSION IN INCHES**
**TOLERANCES ON:**
LENGTHS: ±.005
DIAMETERS: ±.002
ANGLES: ± 2°

**ORDER CODE: XXXX - X - XX - XX - 08 - XX - XX - 0**

**BASIC PART #**

**SPECIFY SHELL FINISH:**
**01** 200μ” TIN/LEAD OVER NICKEL
◇ **80** 200μ” TIN OVER NICKEL (RoHS)
◇ **15** 10μ” GOLD OVER NICKEL (RoHS)

**SPECIFY CONTACT FINISH:**
**01** 200μ” TIN/LEAD OVER NICKEL
◇ **80** 200μ” TIN OVER NICKEL (RoHS)
◇ **27** 30μ” GOLD OVER NICKEL (RoHS)

RoHS 2002/95/EC

**CONTACT**
**#08** CONTACT (DATA ON PAGE 226)

# PIN RECEPTACLES
## With Organic Fibre Plug® Solder Barrier
(see specific contact range on pages 216, 217, 218 & 221)

- These through-hole (tubular) receptacles are designed for hand, wave or reflow* soldering. The *ORGANIC FIBRE PLUG®* barrier prevents solder, paste or flux from contaminating the spring contact.
- After soldering, the *OFP®* barrier is pushed out of the receptacle when the device is plugged in.
- All parts are available as discrete receptacles; but for SMT assembly, certain receptacles are supplied on carrier tape per EIA-481 to feed industry standard pick and place machines.

**Intrusive reflow (also called "pin-in-paste") is a technique of using conventional through-hole components in a reflow soldering process. The receptacles are placed into plated through-holes in the circuit board (solder paste has previously been screen printed on pads adjacent to the holes) and the board is reflowed in the same pass as other SMT components. Solder will fill the plated through-holes and achieve solder joints as reliable as wave soldering. The OFP® barrier prevents solder paste from being picked-up inside the contact during pick 'n place assembly. "Overprinting" paste on the solder mask can be used to adjust the volume of paste required to fill each hole.*

## 5359

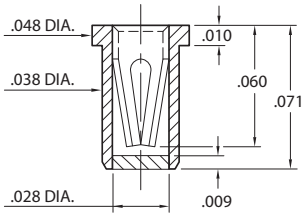


**5359-0-XX-XX-10-XX-10-0**
Solder mount in Ø.043±.003 PTH.
**#10** Contact for Ø.012-.017 pins.
Also available on 16mm wide carrier tape: 3,000 parts per 13" reel.

## 0577

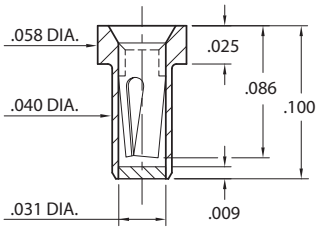


**0577-0-XX-XX-21-XX-10-0**
Solder mount in Ø.045±.003 PTH.
**#21** Contact for Ø.015-.022 pins.
Also available on 12mm wide carrier tape: 3,000 parts per 13" reel.

## 4015

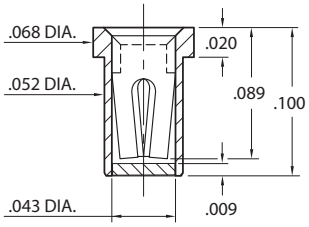


**4015-0-XX-XX-30-XX-10-0**
Solder mount in Ø.057±.003 PTH.
**#30** Contact for Ø.015-.025 pins.
Also available on 8mm wide carrier tape: 5,500 parts per 13" reel.

## 3435

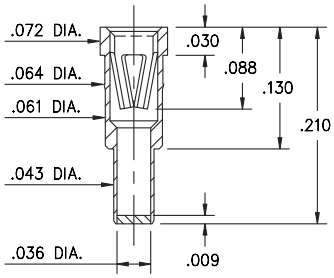


**3435-0-XX-XX-47-XX-04-0**
Solder mount in Ø.046±.003 PTH.
**#47** Contact for Ø.025-.036 and .025" square pins.

### SPECIFICATIONS

**SHELL MATERIAL:**
Brass Alloy 360, 1/2 Hard
**CONTACT MATERIAL:**
Beryllium Copper Alloy 172, HT
**SOLDER BARRIER:**
Organic Fibre Plug®
**DIMENSION IN INCHES**
**TOLERANCES ON:**
LENGTHS: ±.005
DIAMETERS: ±.002
ANGLES: ± 2°

### ORDER CODE: XXXX - 0 - XX - XX - XX - XX -XX - 0

**BASIC PART #**

**SPECIFY PACKAGING:**
**43** Discrete Receptacles
**67** Supplied on 13" Reels

**SPECIFY SHELL FINISH:**
**01** 200µ" TIN/LEAD OVER NICKEL
◇ **80** 200µ" TIN OVER NICKEL (RoHS)

**CONTACT**
**#10, #21, #30 or #47** CONTACT (DATA ON PAGES 216, 217, 218 & 221)

**SPECIFY CONTACT FINISH:**
◇ **27** 30µ" GOLD OVER NICKEL (RoHS)
**02** 100µ" TIN/LEAD OVER NICKEL
◇ **84** 100µ" TIN OVER NICKEL (RoHS)

RoHS 2002/95/EC

# PIN RECEPTACLES
## With Organic Fibre Plug® Solder Barrier
(see specific contact range on pages 221 - 226)

## 4280

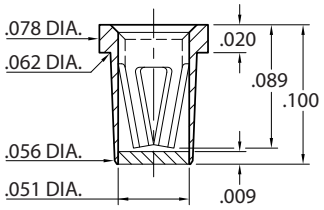


**4280-0-XX-XX-16-XX-10-0**
Solder mount in Ø.067±.003 PTH.
**#16** Contact for Ø.022-.034 pins.
Also available on 8mm wide carrier tape: 6,000 parts per 13" reel.

## 5280

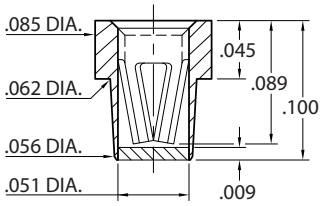


**5280-0-XX-XX-16-XX-40-0**
Solder mount in Ø.067±.003 PTH.
**#16** Contact for Ø.022-.034 pins.
Also available on 16mm wide carrier tape: 2,200 parts per 13" reel.

## 0479

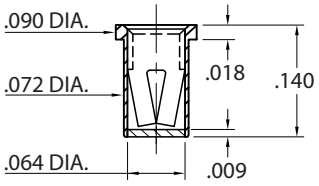


**0479-0-XX-XX-34-XX-10-0**
Solder mount in Ø.077±.003 PTH.
**#34** Contact for Ø.032-.046 pins.
Also available on 16mm wide carrier tape: 2,000 parts per 13" reel.

## 9873

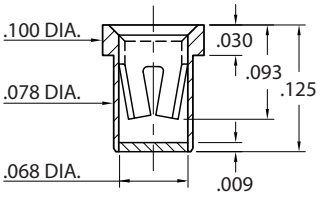


**9873-0-XX-XX-02-XX-10-0**
Solder mount in Ø.083±.003 PTH.
**#02** Contact for Ø.040-.050 pins.
Also available on 12mm wide carrier tape: 4,500 parts per 13" reel.

## 5364

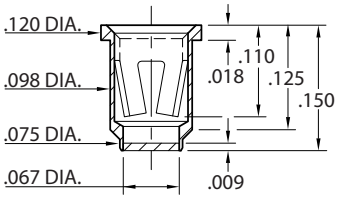


**5364-0-XX-XX-23-XX-10-0**
Solder mount in Ø.103±.003 PTH.
**#23** Contact for Ø.045-.065 pins.
Also available on 12mm wide carrier tape: 2,000 parts per 13" reel.

## 5291

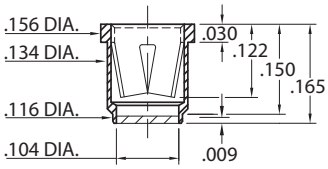


**5291-0-XX-XX-08-XX-40-0**
Solder mount in Ø.139±.003 PTH.
**#08** Contact for Ø.084-.102 pins.
Also available on 16mm wide carrier tape: 1,700 parts per 13" reel.

## SPECIFICATIONS

**SHELL MATERIAL:**
Brass Alloy 360, 1/2 Hard
**CONTACT MATERIAL:**
Beryllium Copper Alloy 172, HT
**SOLDER BARRIER:**
Organic Fibre Plug®
**DIMENSION IN INCHES**
**TOLERANCES ON:**
LENGTHS: ±.005
DIAMETERS: ±.002
ANGLES: ± 2°

## ORDER CODE: XXXX - 0 - XX - XX - XX - XX -XX - 0

**BASIC PART #**

**SPECIFY PACKAGING:**
**43** Discrete Receptacles
**67** Supplied on 13" Reels

**SPECIFY SHELL FINISH:**
**01** 200µ" TIN/LEAD OVER NICKEL
◇ **80** 200µ" TIN OVER NICKEL (RoHS)

**CONTACT**
**#02, #08, #16, #23 or #34** CONTACT (DATA ON PAGES 221 - 226)

**SPECIFY CONTACT FINISH:**
◇ **27** 30µ" GOLD OVER NICKEL (RoHS)
**02** 100µ" TIN/LEAD OVER NICKEL
◇ **84** 100µ" TIN OVER NICKEL (RoHS)

RoHS 2002/95/EC

## 1702/1703

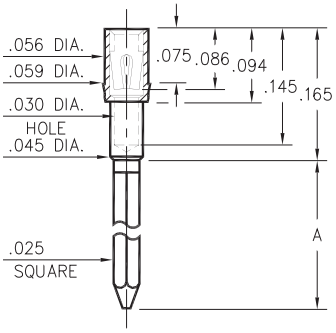


| Basic Part Number | # of Wraps | Length A |
|---|---|---|
| 1702-2 | 2 | .370 |
| 1703-3 | 3 | .510 |

**170X-X-17-XX-30-XX-02-0**
Press-fit in .057 mounting hole

## 0038⇒0040/0066⇒0068

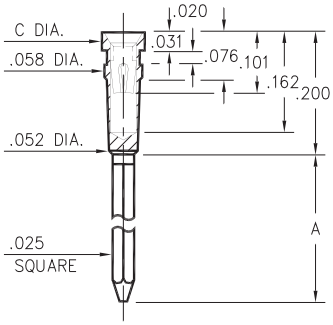


| Basic Part # | # of Wraps | Length A | Dia. C |
|---|---|---|---|
| 0040-1 | 1 | .260 | |
| 0039-2 | 2 | .360 | .072 |
| 0038-3 | 3 | .500 | |
| 0068-1 | 1 | .260 | |
| 0067-2 | 2 | .360 | .062 |
| 0066-3 | 3 | .500 | |

**00XX-X-17-XX-30-XX-02-0**
Press-fit in .055 mounting hole

## 0086/0088/0089

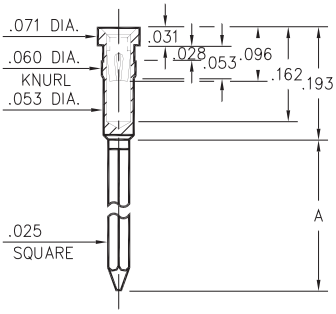


| Basic Part Number | # of Wraps | Length A |
|---|---|---|
| 0089-2 | 2 | .370 |
| 0088-3 | 3 | .510 |
| 0086-4 | 4 | .630 |

**008X-X-17-XX-3X-XX-02-0**
Press-fit in .057 mounting hole

## 1030⇒1036

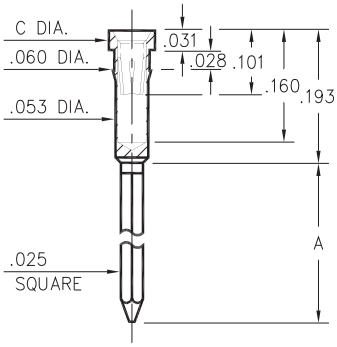


| Basic Part # | # of Wraps | Length A | Dia. C |
|---|---|---|---|
| 1032-1 | 1 | .260 | |
| 1031-2 | 2 | .360 | .072 |
| 1030-3 | 3 | .510 | |
| 1036-1 | 1 | .260 | |
| 1035-2 | 2 | .360 | .062 |
| 1034-3 | 3 | .510 | |

**103X-X-17-XX-3X-XX-02-0**
Press-fit in .057 mounting hole

## 1045

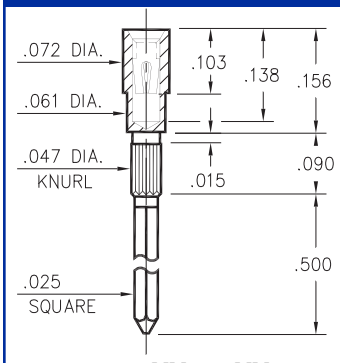


**1045-3-17-XX-30-XX-02-0**
Press-fit in .043 mounting hole

## 1040

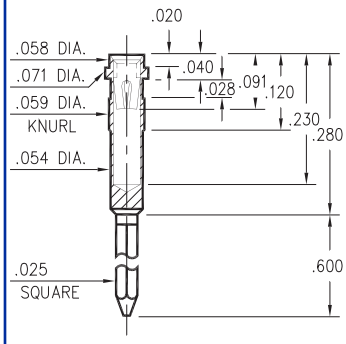


**1040-3-17-XX-30-XX-02-0**
Press-fit in .056 mounting hole

## SPECIFICATIONS

**SHELL MATERIAL:**
Brass Alloy 360, 1/2 Hard

**CONTACT MATERIAL:**
Beryllium Copper Alloy 172, HT

**DIMENSION IN INCHES**
**TOLERANCES ON:**
LENGTHS: ±.005
DIAMETERS: ±.002
ANGLES: ± 2°

**ORDER CODE: XXXX - X - 17 - XX - XX - XX - 02 - 0**

**BASIC PART #**

**SPECIFY SHELL FINISH:**
**01** 200μ" TIN/LEAD OVER NICKEL
◇ **80** 200μ" TIN OVER NICKEL (RoHS)
◇ **15** 10μ" GOLD OVER NICKEL (RoHS)

**SPECIFY CONTACT FINISH:**
**02** 100μ" TIN/LEAD OVER NICKEL
◇ **84** 100μ" TIN OVER NICKEL (RoHS)
◇ **27** 30μ" GOLD OVER NICKEL (RoHS)

RoHS 2002/95/EC

**SELECT CONTACT**
**#30 or #32** CONTACT (DATA ON PAGES 218 & 219)

## 0444

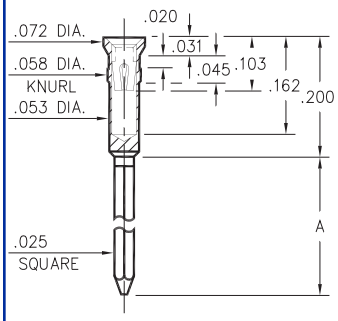


| Basic Part Number | # of Wraps | Length A |
|---|---|---|
| 0444-1 | 1 | .260 |
| 0444-2 | 2 | .370 |
| 0444-3 | 3 | .505 |

**0444-X-17-XX-30-XX-02-0**
Press-fit in .056 mounting hole

## 0445

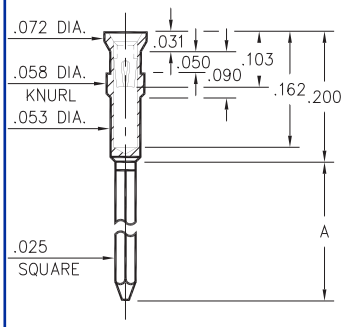


| Basic Part Number | # of Wraps | Length A |
|---|---|---|
| 0445-3 | 3 | .505 |

**044X-X-17-XX-30-XX-02-0**
Press-fit in .056 mounting hole

## 2601⇒ 2603

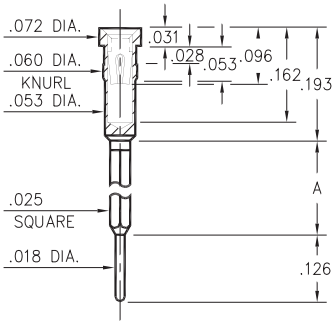


| Basic Part Number | # of Wraps | Length A |
|---|---|---|
| 2601-0 | 1 | .232 |
| 2602-0 | 2 | .350 |
| 2603-0 | 3 | .468 |

**260X-X-17-XX-30-XX-02-0**
Press-fit in .057 mounting hole

## 1047

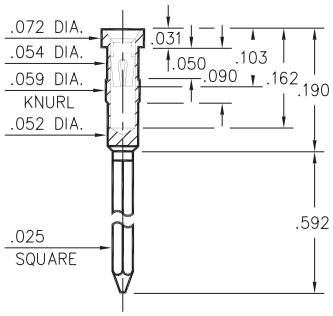


**1047-3-17-XX-30-XX-02-0**
Press-fit in .056 mounting hole

## SPECIFICATIONS

**SHELL MATERIAL:**
Brass Alloy 360, 1/2 Hard

**CONTACT MATERIAL:**
Beryllium Copper Alloy 172, HT

**DIMENSION IN INCHES**
**TOLERANCES ON:**
LENGTHS: ±.005
DIAMETERS: ±.002
ANGLES: ± 2°

**ORDER CODE: XXXX - X - 17 - XX - 30 - XX - 02 - 0**

**BASIC PART #**

**SPECIFY SHELL FINISH:**
**01** 200μ" TIN/LEAD OVER NICKEL
◇ **80** 200μ" TIN OVER NICKEL (RoHS)
◇ **15** 10μ" GOLD OVER NICKEL (RoHS)

**SPECIFY CONTACT FINISH:**
**02** 100μ" TIN/LEAD OVER NICKEL
◇ **84** 100μ" TIN OVER NICKEL (RoHS)
◇ **27** 30μ" GOLD OVER NICKEL (RoHS)

RoHS 2002/95/EC

**CONTACT**
**#30** CONTACT (DATA ON PAGE 218)

# WRAPOST RECEPTACLES
## for .022" - .032" diameter pins (#06 contact) and .022" - .034" diameter pins (#16 contact)

## 2297

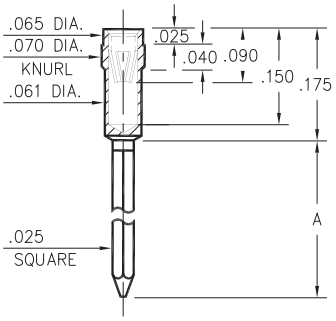


| Basic Part Number | # of Wraps | Length A |
|---|---|---|
| 2297-2 | 2 | .370 |
| 2297-3 | 3 | .430 |

**2297-X-17-XX-16-XX-02-0**
Press-fit in .067 mounting hole

## 0280

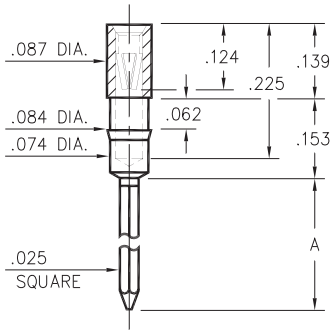


| Basic Part Number | # of Wraps | Length A |
|---|---|---|
| 0280-2 | 2 | .360 |
| 0280-3 | 3 | .510 |

**0280-X-17-XX-06-XX-02-0**
Press-fit in .081 mounting hole

## 0281

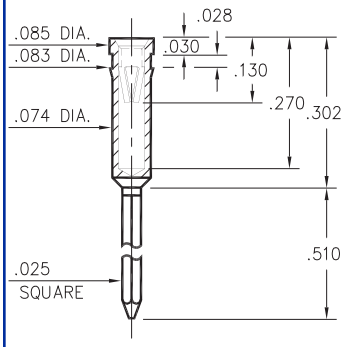


**0281-3-17-XX-06-XX-02-0**
Press-fit in .080 mounting hole

## SPECIFICATIONS

**SHELL MATERIAL:**
Brass Alloy 360, 1/2 Hard

**CONTACT MATERIAL:**
Beryllium Copper Alloy 172, HT

**DIMENSION IN INCHES**
**TOLERANCES ON:**
LENGTHS: ±.005
DIAMETERS: ±.002
ANGLES: ± 2°

**ORDER CODE: XXXX - X - 17 - XX - XX - XX - 02 - 0**

**BASIC PART #**

**SPECIFY SHELL FINISH:**
**01** 200μ" TIN/LEAD OVER NICKEL
◇ **80** 200μ" TIN OVER NICKEL (RoHS)
◇ **15** 10μ" GOLD OVER NICKEL (RoHS)

**SPECIFY CONTACT FINISH:**
**01** 200μ" TIN/LEAD OVER NICKEL
◇ **80** 200μ" TIN OVER NICKEL (RoHS)
◇ **27** 30μ" GOLD OVER NICKEL (RoHS)

RoHS 2002/95/EC

**SELECT CONTACT**
**#06 or #16** CONTACT (DATA ON PAGES 220 & 221)

## 1052/1053

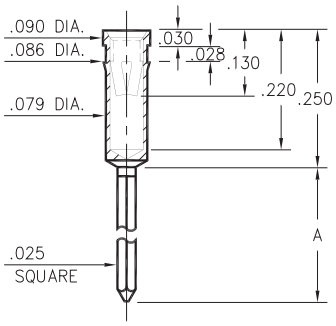


| Basic Part Number | # of Wraps | Length A |
|---|---|---|
| 1053-2 | 2 | .360 |
| 1052-3 | 3 | .515 |

**105X-X-17-XX-34-XX-02-0**
Press-fit in .083 mounting hole

## 0383

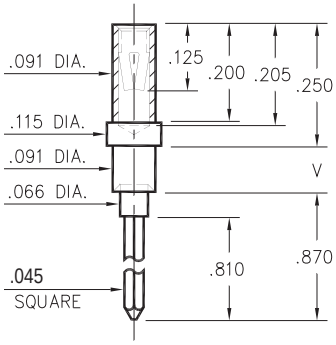


| Basic Part Number | Board Thickness | Length V |
|---|---|---|
| 0383-1 | .062 | .094 |
| 0383-2 | .094 | .125 |
| 0383-3 | .125 | .156 |

**0383-X-17-XX-34-XX-02-0**
Swage mount in .094 hole

## 0382

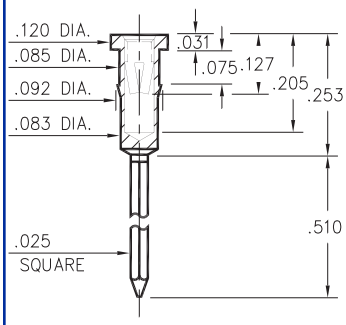


**0382-3-17-XX-34-XX-02-0**
Press-fit in .089 mounting hole

## SPECIFICATIONS

**SHELL MATERIAL:**
Brass Alloy 360, 1/2 Hard

**CONTACT MATERIAL:**
Beryllium Copper Alloy 172, HT

**DIMENSION IN INCHES**
**TOLERANCES ON:**
LENGTHS: ±.005
DIAMETERS: ±.002
ANGLES: ± 2°

**ORDER CODE: XXXX - X - 17 - XX - 34 - XX - 02 - 0**

**BASIC PART #**

**SPECIFY SHELL FINISH:**
**01** 200μ" TIN/LEAD OVER NICKEL
◇ **80** 200μ" TIN OVER NICKEL (RoHS)
◇ **15** 10μ" GOLD OVER NICKEL (RoHS)

**SPECIFY CONTACT FINISH:**
**01** 200μ" TIN/LEAD OVER NICKEL
◇ **80** 200μ" TIN OVER NICKEL (RoHS)
◇ **27** 30μ" GOLD OVER NICKEL (RoHS)

RoHS 2002/95/EC

**CONTACT**
**#34** CONTACT (DATA ON PAGE 222)

# THE BASIC PIN

Mill-Max printed circuit pins are machined individual pins used for various plug-in applications and are functionally the dynamic building blocks within an interconnect system. Turret, slotted, wrapost and pin types are available. They are commonly fastened to printed circuit boards by being press-fit, swaged (riveted) or soldered.

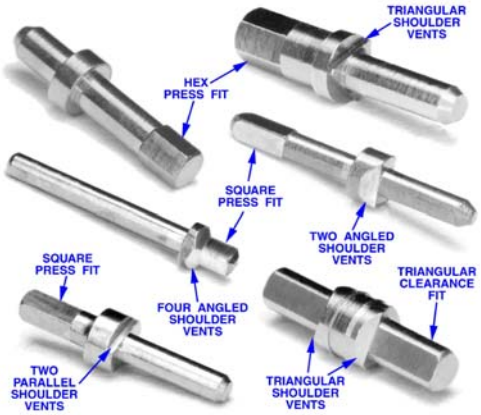


PCB pins serve not only as a conductive path for an electrical circuit, but provide strength to an assembly module as a mechanical interface. Mill-Max Mfg. Corp. has developed thousands of state-of-the-art “basic pin” designs, featuring pin barrel geometries for our customers who require outside-the-box solutions to their interconnect needs.

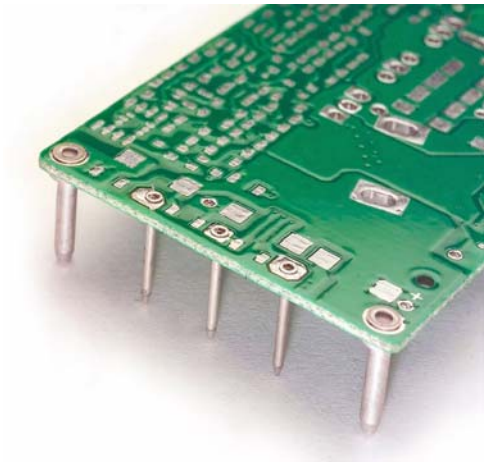

In addition to the products found on the following pages Mill-Max offers the following stock materials and diameters available for manufacture:

BRASS Alloy 360, 1/2 hard: .062/.072/.078/.093/.125/ .156/.187/.250 diameters
BRASS Alloy 360, 1/4 hard: .072/.078 diameters
BRASS TUBING: .072 O.D.x.020 I.D./ .072 O.D.x.025 I.D.
PHOSPHOR BRONZE Alloy 544: .062/.072/.078 diameters
TELLURIUM COPPER Alloy 145: .079/.093/.125/ .156 diameters

Mill-Max will gladly quote application specific products. Please complete the specification sheet on page 213 or send us your own drawings. We assure you a fast response.

## 4184

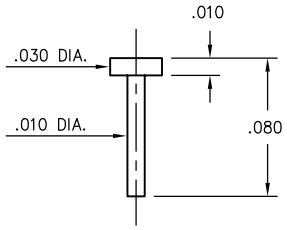


**4184-0-00-XX-00-00-33-0**
Solder mount in .014 mounting hole

## 9050

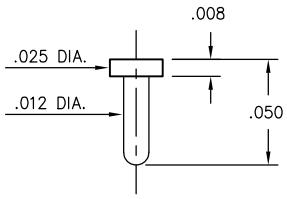


**9050-0-00-XX-00-00-33-0**
Solder mount in .016 mounting hole

## 4353

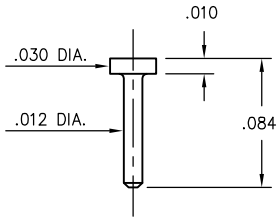


**4353-0-00-XX-00-00-33-0**
Solder mount in .016 mounting hole

## 9083

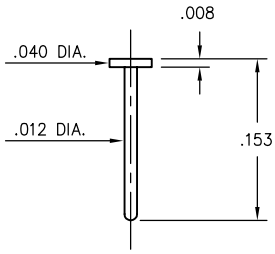


**9083-0-00-XX-00-00-38-0**
Solder mount in .016 mounting hole

## 4825

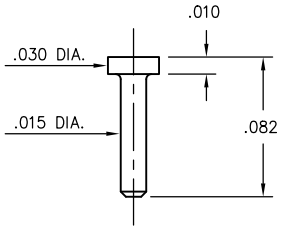


**4825-0-00-XX-00-00-33-0**
Solder mount in .019 mounting hole

## 4689

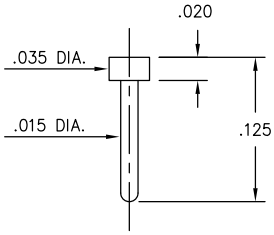


**4689-0-00-XX-00-00-33-0**
Solder mount in .019 mounting hole

## 4361

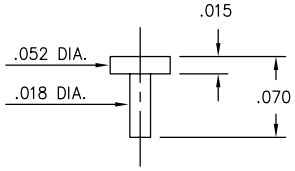


**4361-0-00-XX-00-00-33-0**
Solder mount in .022 mounting hole

## 4288

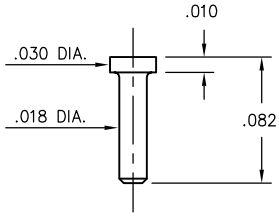


**4288-0-00-XX-00-00-33-0**
Solder mount in .022 mounting hole

## 4068

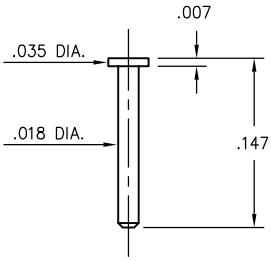


**4068-0-00-XX-00-00-33-0**
Solder mount in .022 mounting hole

## 9113

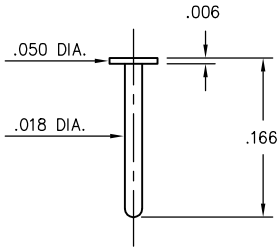


**9113-0-00-XX-00-00-38-0**
Solder mount in .022 mounting hole

## 9137

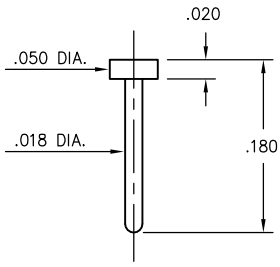


**9137-0-00-XX-00-00-38-0**
Solder mount in .022 mounting hole

## 5137

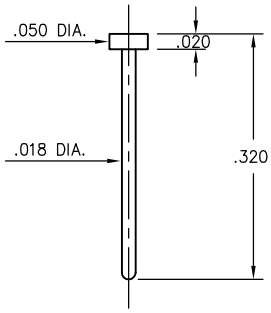


**5137-0-00-XX-00-00-38-0**
Solder mount in .022 mounting hole

## SPECIFICATIONS

**PIN MATERIAL:**
Brass Alloy 360, 1/2 Hard
(Except where noted)

**DIMENSION IN INCHES**
**TOLERANCES ON:**
LENGTHS: ±.005
DIAMETERS: ±.002
ANGLES: ± 2°

**ORDER CODE: XXXX - X - 00 - XX - 00 - 00 - XX - 0**

**BASIC PART #**

**SPECIFY PIN FINISH:**
**01** 200µ" TIN/LEAD OVER NICKEL
◇ **80** 200µ" TIN OVER NICKEL (RoHS)
◇ **15** 10µ" GOLD OVER NICKEL (RoHS)
◇ **21** 20µ" GOLD OVER NICKEL (RoHS)
◇ **34** 50µ" GOLD OVER NICKEL (RoHS)

RoHS 2002/95/EC

## 4209

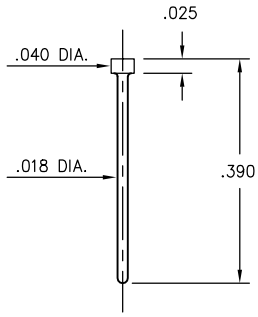


**4209-0-00-XX-00-00-33-0**
Solder mount in .022 mounting hole

## 5063

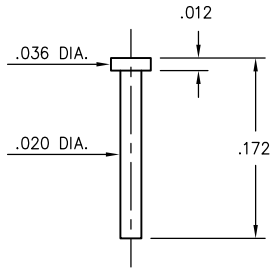


**5063-0-00-XX-00-00-33-0**
Solder mount in .024 mounting hole

## 4965

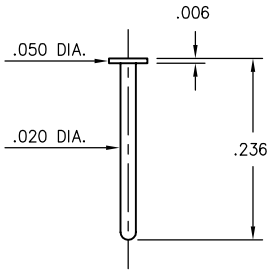


**4965-0-00-XX-00-00-33-0**
Solder mount in .024 mounting hole

## 6547

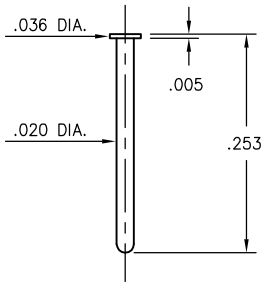


**6547-0-00-XX-00-00-33-0**
Solder mount in .024 mounting hole

## 4071

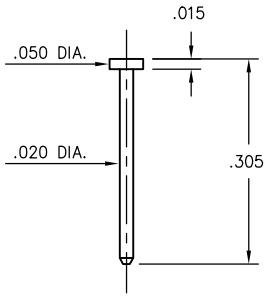


**4071-0-00-XX-00-00-33-0**
Solder mount in .024 mounting hole

## 8808

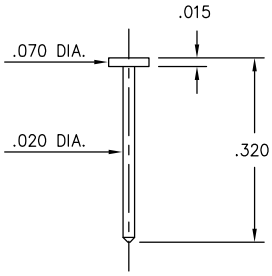


**8808-0-00-XX-00-00-33-0**
Solder mount in .024 mounting hole

## 4964

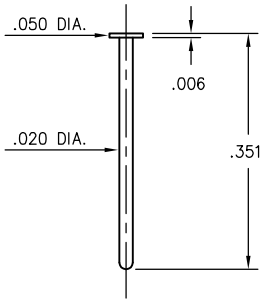


**4964-0-00-XX-00-00-33-0**
Solder mount in .024 mounting hole

## 9185

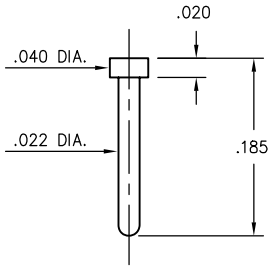


**9185-0-00-XX-00-00-33-0**
Solder mount in .026 mounting hole

## 8257

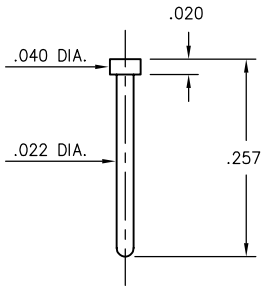


**8257-0-00-XX-00-00-33-0**
Solder mount in .026 mounting hole

## 5035

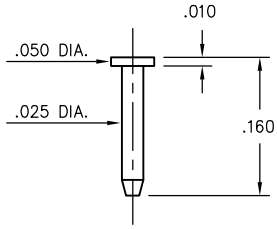


**5035-0-00-XX-00-00-33-0**
Solder mount in .029 mounting hole

## 5240

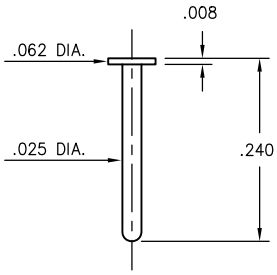


**5240-0-00-XX-00-00-33-0**
Solder mount in .029 mounting hole

## 2650

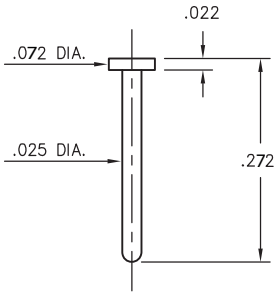


**2650-0-00-XX-00-00-33-0**
Solder mount in .029 mounting hole

## SPECIFICATIONS

**PIN MATERIAL:**
Brass Alloy 360, 1/2 Hard
(Except where noted)

**DIMENSION IN INCHES**
**TOLERANCES ON:**
LENGTHS: ±.005
DIAMETERS: ±.002
ANGLES: ± 2°

**ORDER CODE: XXXX - X - 00 - XX - 00 - 00 - 33 - 0**

**BASIC PART #**

**SPECIFY PIN FINISH:**
**01** 200µ" TIN/LEAD OVER NICKEL
◇ **80** 200µ" TIN OVER NICKEL (RoHS)
◇ **15** 10µ" GOLD OVER NICKEL (RoHS)
◇ **21** 20µ" GOLD OVER NICKEL (RoHS)
◇ **34** 50µ" GOLD OVER NICKEL (RoHS)

RoHS 2002/95/EC

# PRINTED CIRCUIT PINS
## Nail Head Type

## 5062

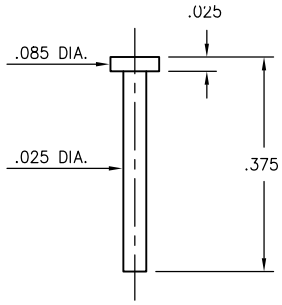


**5062-0-00-XX-00-00-33-0**
Solder mount in .029 mounting hole

## 8451

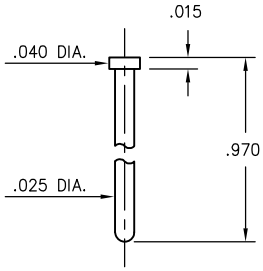


**8451-0-00-XX-00-00-33-0**
Solder mount in .029 mounting hole

## 6477

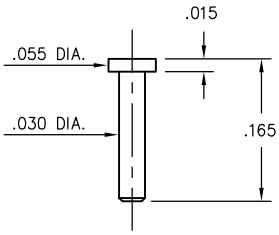


**6477-0-00-XX-00-00-38-0**
Solder mount in .034 mounting hole

## 4477

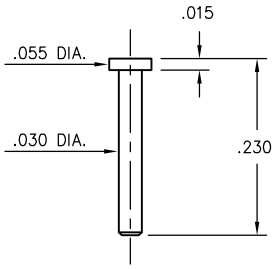


**4477-0-00-XX-00-00-33-0**
Solder mount in .034 mounting hole

## 4268

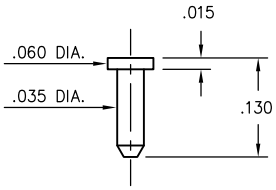


**4268-0-00-XX-00-00-33-0**
Solder mount in .039 mounting hole

## 9086

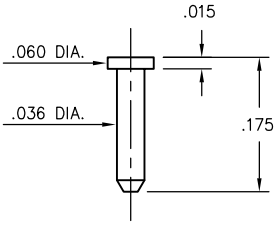


**9086-0-00-XX-00-00-33-0**
Solder mount in .040 mounting hole

## 8330

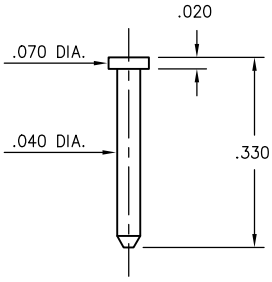


**8330-0-00-XX-00-00-38-0**
Solder mount in .044 mounting hole

## 9228

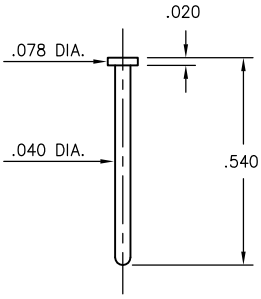


**9228-0-00-XX-00-00-38-0**
Solder mount in .044 mounting hole

## 6095

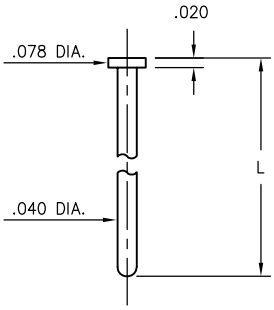


| Basic Part Number | Pin Length L |
|---|---|
| 6095-0 | .580 |
| 6095-1 | .475 |

**6095-X-00-XX-00-00-38-0**
Solder mount in .044 mounting hole

## 6092

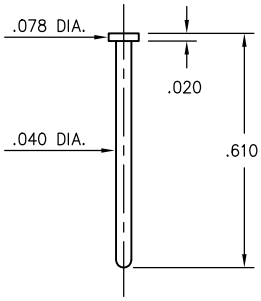


**6092-0-00-XX-00-00-33-0**
Solder mount in .044 mounting hole

## SPECIFICATIONS

**PIN MATERIAL:**
Brass Alloy 360, 1/2 Hard
(Except where noted)

**DIMENSION IN INCHES**
**TOLERANCES ON:**
LENGTHS: ±.005
DIAMETERS: ±.002
ANGLES: ± 2°

**ORDER CODE: XXXX - X - 00 - XX - 00 - 00 - XX - 0**

**BASIC PART #**

**SPECIFY PIN FINISH:**
**01** 200µ" TIN/LEAD OVER NICKEL
◇ **80** 200µ" TIN OVER NICKEL (RoHS)
◇ **15** 10µ" GOLD OVER NICKEL (RoHS)
◇ **21** 20µ" GOLD OVER NICKEL (RoHS)
◇ **34** 50µ" GOLD OVER NICKEL (RoHS)

RoHS 2002/95/EC

## 1179

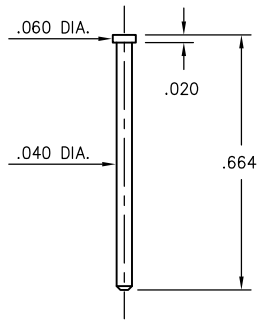


**1179-0-00-XX-00-00-33-0**
Solder mount in .044 mounting hole

## 9872

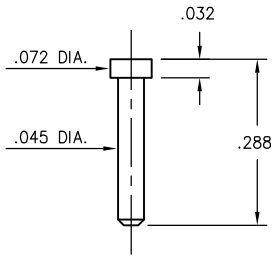


**9872-0-00-XX-00-00-33-0**
Solder mount in .049 mounting hole

## 2381

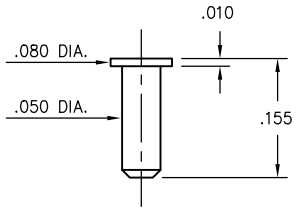


**2381-0-00-XX-00-00-33-0**
Solder mount in .054 mounting hole

## 9265

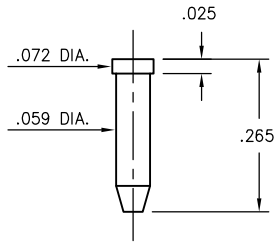


**9265-0-00-XX-00-00-38-0**
Solder mount in .063 mounting hole

## 6142

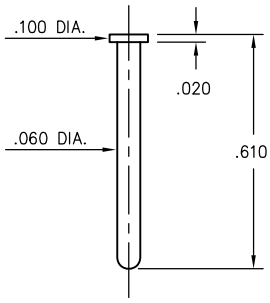


**6142-0-00-XX-00-00-33-0**
Solder mount in .064 mounting hole

## 9022

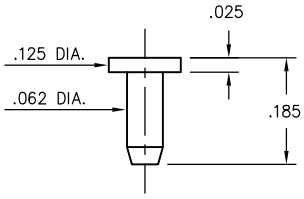


**9022-0-00-XX-00-00-33-0**
Solder mount in .066 mounting hole

## 8086

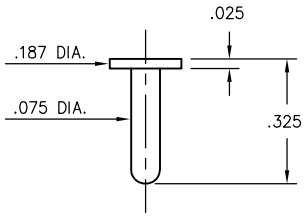


**8086-0-00-XX-00-00-33-0**
Solder mount in .079 mounting hole

## SPECIFICATIONS

**PIN MATERIAL:**
Brass Alloy 360, 1/2 Hard
(Except where noted)

**DIMENSION IN INCHES**
**TOLERANCES ON:**

| | |
|---|---|
| LENGTHS: | ±.005 |
| DIAMETERS: | ±.002 |
| ANGLES: | ± 2° |

**ORDER CODE: XXXX - X - 00 - XX - 00 - 00 - XX - 0**

**BASIC PART #**

**SPECIFY PIN FINISH:**
**01** 200µ" TIN/LEAD OVER NICKEL
◇ **80** 200µ" TIN OVER NICKEL (RoHS)
◇ **15** 10µ" GOLD OVER NICKEL (RoHS)
◇ **21** 20µ" GOLD OVER NICKEL (RoHS)
◇ **34** 50µ" GOLD OVER NICKEL (RoHS)

RoHS 2002/95/EC

## 4006

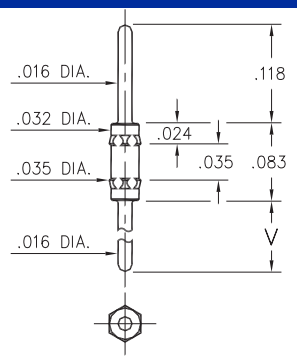


| Basic Part Number | Length V |
|---|---|
| 4006-0 | .118 |
| 4006-1 | .188 |
| 4006-2 | .288 |

**4006-X-00-XX-00-00-03-0**
Hex Press-fit in .034 mounting hole

## 3121

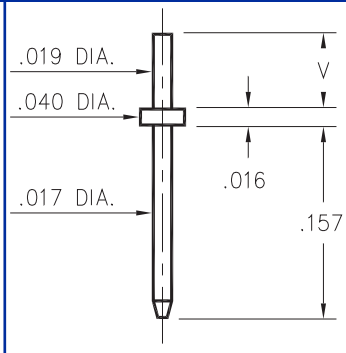


| Basic Part Number | Substrate Thickness | Length V |
|---|---|---|
| 3121-1 | .025 | .061 |
| 3121-2 | .040 | .075 |

**3121-X-00-XX-00-00-08-0**
Solder mount in .023 mounting hole
Material is annealed.

## 3128

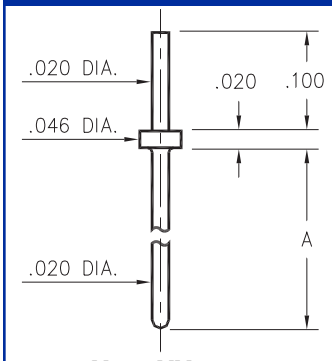


| Basic Part Number | Length A |
|---|---|
| 3128-1 | .250 |
| 3128-2 | .425 |
| 3128-3 | .525 |
| 3128-4 | .550 |
| 3128-5 | .930 |

**3128-X-00-XX-00-00-08-0**
Solder mount in .024 min. mounting hole

## 3006

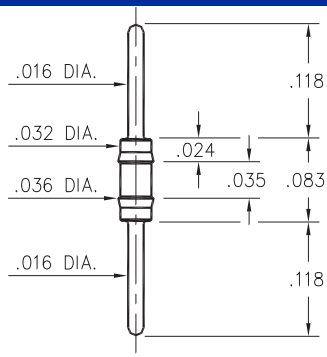


**3006-0-00-XX-00-00-03-0**
Press-fit in .034 mounting hole

## 8885

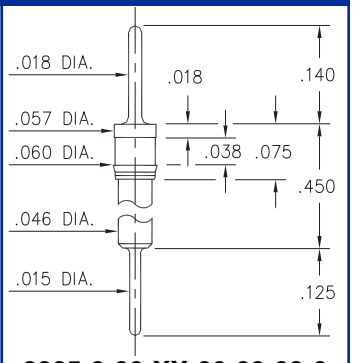


**8885-0-00-XX-00-00-03-0**
Press-fit in .057 mounting hole

## 6218

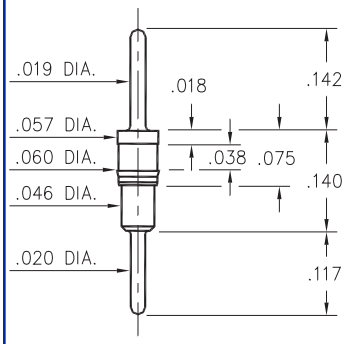


**6218-0-00-XX-00-00-03-0**
Press-fit in .057 mounting hole

## 5012

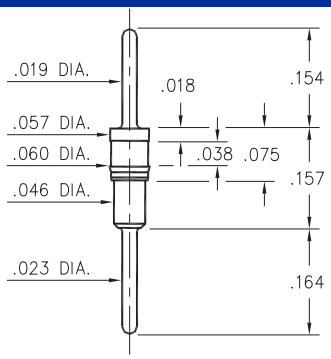


**5012-0-00-XX-00-00-03-0**
Press-fit in .057 mounting hole

## 0508

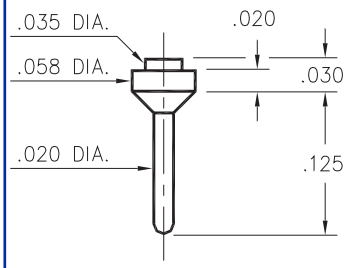


**0508-0-00-XX-00-00-03-0**
Surface Mount

## 9081

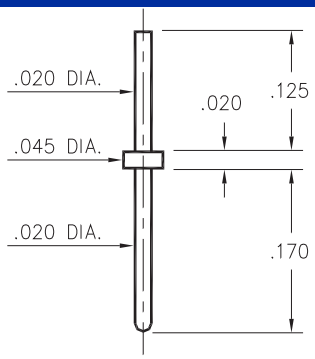


**9081-0-00-XX-00-00-08-0**
Solder mount in .024 mounting hole

## SPECIFICATIONS

**PIN MATERIAL:**
Brass Alloy 360, 1/2 Hard
(Except where noted)

**DIMENSION IN INCHES**
**TOLERANCES ON:**
LENGTHS: ±.005
DIAMETERS: ±.002
ANGLES: ± 2°

**ORDER CODE: XXXX - X - 00 - XX - 00 - 00 - XX - 0**

**BASIC PART #**

**SPECIFY PIN FINISH:**
**01** 200µ" TIN/LEAD OVER NICKEL
◇ **80** 200µ" TIN OVER NICKEL (RoHS)
◇ **15** 10µ" GOLD OVER NICKEL (RoHS)
◇ **21** 20µ" GOLD OVER NICKEL (RoHS)
◇ **34** 50µ" GOLD OVER NICKEL (RoHS)

RoHS 2002/95/EC

## 8685/9036

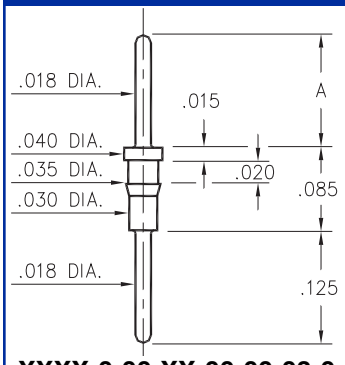


| Basic Part Number | Length A |
|---|---|
| 8685-0 | .125 |
| 9036-0 | .175 |

**XXXX-0-00-XX-00-00-03-0**
Press-fit in .033 mounting hole.
Pin material is Ph. Br. 544 (B2)

## 9051

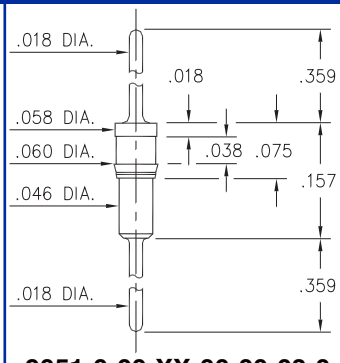


**9051-0-00-XX-00-00-03-0**
Press-fit in .057 mounting hole

## 8969

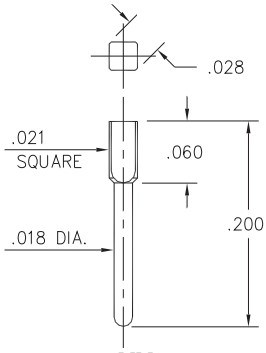


**8969-0-05-XX-00-00-03-0**
Square press-fit in .023 plated thru hole (use .7 mm drill prior to plating)

## 8979

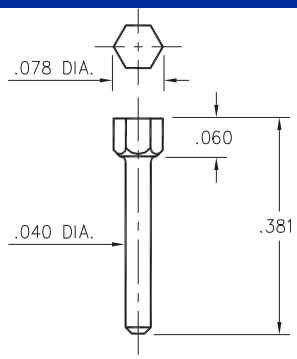


**8979-0-00-XX-00-00-03-0**
Hex press-fit in .074 plated thru hole

## 9159

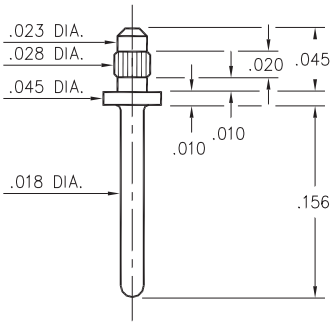


**9159-0-00-XX-00-00-03-0**
Press-fit in .026 mounting hole

## 3155/5155

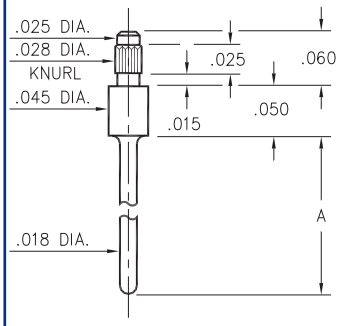


| Basic Part Number | Length A |
|---|---|
| 3155-0 | .180 |
| 5155-0 | .130 |

**X155-0-00-XX-00-00-03-0**
Press-fit in .026 mounting hole
Pin material is Ph. Br. 544 (B2)

## 4194

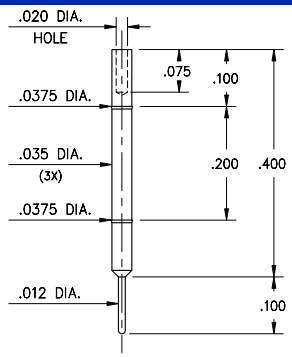


**4194-0-00-XX-00-00-08-0**
Wire termination and Press-fit in .036 hole

## 5556

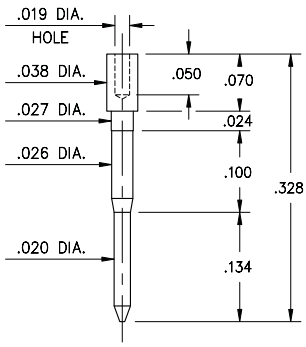


**5556-0-00-XX-00-00-38-0**
Wire termination

## 3790

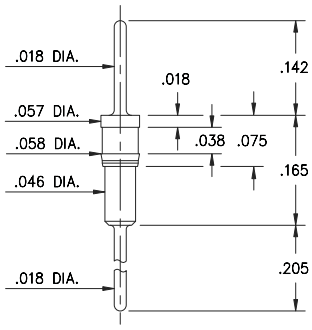


**3790-0-00-XX-00-00-03-0**
Press-fit in .057 mounting hole

## 3796

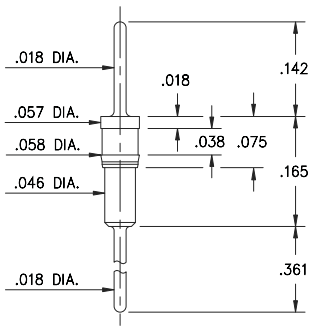


**3796-0-00-XX-00-00-03-0**
Press-fit in .057 mounting hole

## SPECIFICATIONS

**PIN MATERIAL:**
Brass Alloy 360, 1/2 Hard
(Except where noted)

**DIMENSION IN INCHES**
**TOLERANCES ON:**
LENGTHS: ±.005
DIAMETERS: ±.002
ANGLES: ± 2°

**ORDER CODE: XXXX - X - 0X - XX - 00 - 00 - XX - 0**

**BASIC PART #**

**SPECIFY PIN FINISH:**
**01** 200µ" TIN/LEAD OVER NICKEL
◇ **80** 200µ" TIN OVER NICKEL (RoHS)
◇ **15** 10µ" GOLD OVER NICKEL (RoHS)
◇ **21** 20µ" GOLD OVER NICKEL (RoHS)
◇ **34** 50µ" GOLD OVER NICKEL (RoHS)

RoHS 2002/95/EC

## 3116

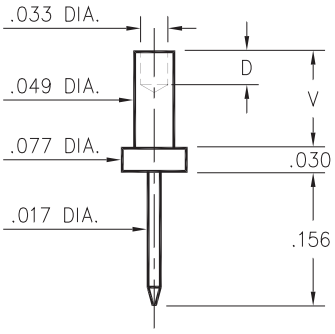


| Basic Part Number | Board Thick-ness | Length V | Length D |
|---|---|---|---|
| 3116-1 | .031 | .051 | .035 |
| 3116-2 | .062 | .082 | .062 |
| 3116-3 | .094 | .113 | .062 |
| 3116-4 | .125 | .145 | .062 |

**3116-X-00-XX-00-00-08-0**
Swage mount in .052 hole

## 5435

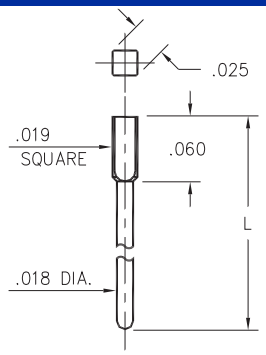


| Basic Part Number | Length L |
|---|---|
| 5435-0 | .303 |
| 5435-1 | .200 |
| 5435-2 | .413 |

**5435-X-05-XX-00-00-03-0**
Square press-fit in .022
plated thru hole

## 3135

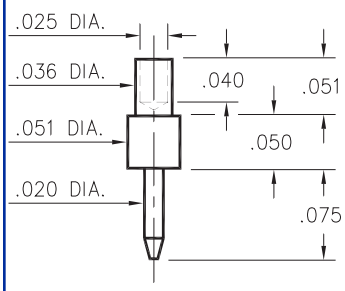


**3135-1-00-XX-00-00-08-0**
Swage mount in .040 hole.
For .031 thick board.

## 3210

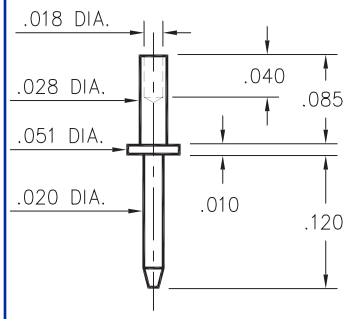


**3210-2-00-XX-00-00-08-0**
Swage mount in .031 hole.
For .062 thick board.

## 3129

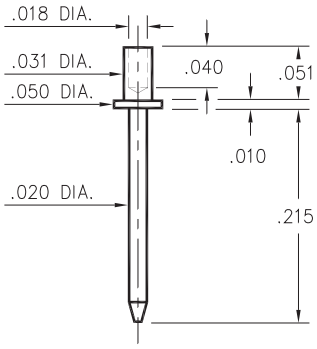


**3129-1-00-XX-00-00-08-0**
Swage mount in .035 hole.
For .031 thick board.

## 3147

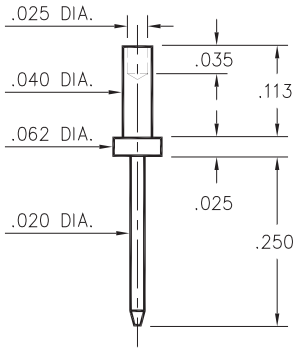


**3147-3-00-XX-00-00-08-0**
Swage mount in .043 hole.
For .094 thick board.

## 4366

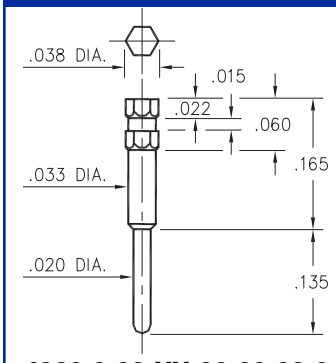


**4366-0-00-XX-00-00-03-0**
Hex press-fit in .034
plated thru hole

## 1267

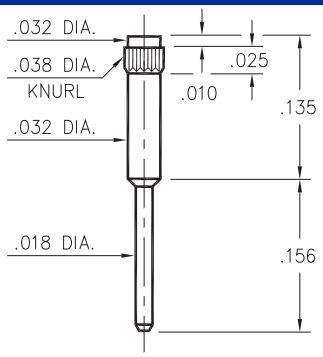


**1267-0-00-XX-00-00-03-0**
Press-fit in .035 mounting hole

## 7827

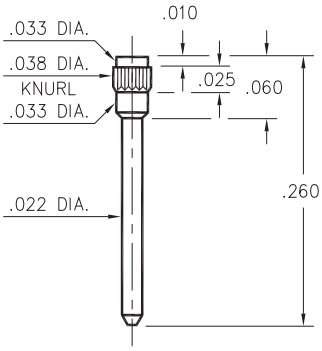


**7827-0-00-XX-00-00-03-0**
Press-fit in .035 mounting hole

## 1130

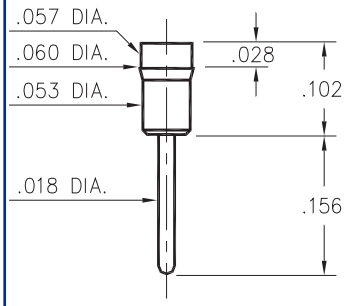


**1130-0-00-XX-00-00-03-0**
Press-fit in .057 mounting hole
Pin material is Ph Br. 544 (B2)

## SPECIFICATIONS

**PIN MATERIAL:**
Brass Alloy 360, 1/2 Hard
(Except Swage pins which are annealed)

**DIMENSION IN INCHES**
**TOLERANCES ON:**
LENGTHS: ±.005
DIAMETERS: ±.002
ANGLES: ± 2°

**ORDER CODE: XXXX - X - 0X - XX - 00 - 00 - XX - 0**

**BASIC PART #**

**SPECIFY PIN FINISH:**
**01** 200µ" TIN/LEAD OVER NICKEL
◇ **80** 200µ" TIN OVER NICKEL (RoHS)
◇ **15** 10µ" GOLD OVER NICKEL (RoHS)
◇ **21** 20µ" GOLD OVER NICKEL (RoHS)
◇ **34** 50µ" GOLD OVER NICKEL (RoHS)

RoHS 2002/95/EC

## 1067

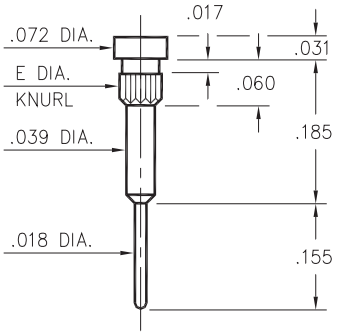


| Basic Part Number | Knurl Dia. E | Mounting Hole |
|---|---|---|
| 1067-1 | .058 | .055 |
| 1067-2 | .045 | .042 |

**1067-X-00-XX-00-00-03-0**
Press-fit in .042/.055 mounting hole

## 3158

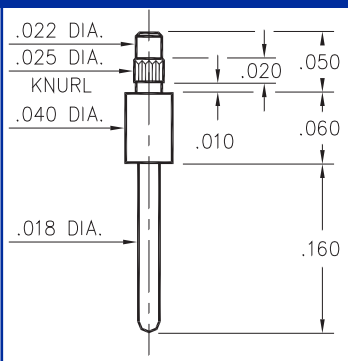


**3158-0-00-XX-00-00-03-0**
Press-fit in .023 mounting hole

## 9000

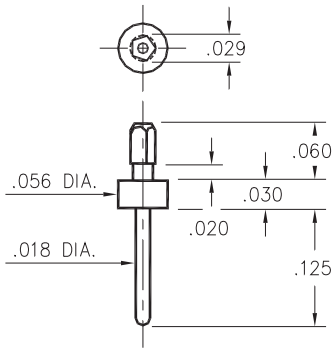


**9000-0-00-XX-00-00-03-0**
Pentagonal press-fit in .025
plated thru hole

## 3157

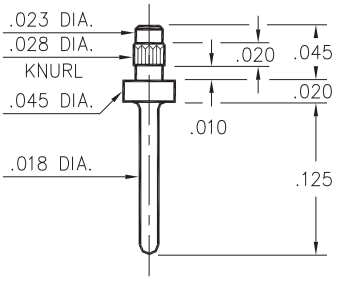


**3157-0-00-XX-00-00-03-0**
Press-fit in .026 mounting hole

## 0915

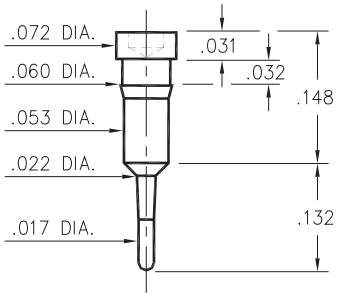


**0915-0-00-XX-00-00-03-0**
Press-fit in .057 mounting hole

## 3154

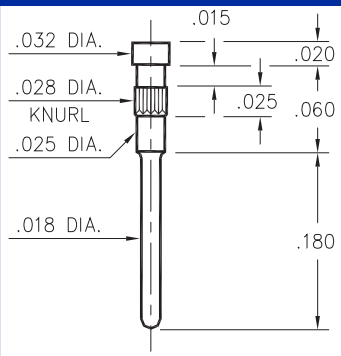


**3154-0-00-XX-00-00-03-0**
Press-fit in .026 mounting hole
Pin material is Ph Br 544 (B2)

## 0542

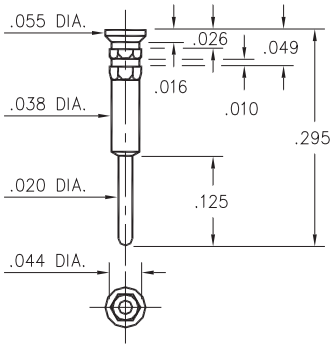


**0542-0-00-XX-00-00-03-0**
Hex press-fit in .039
plated thru hole

## 0522

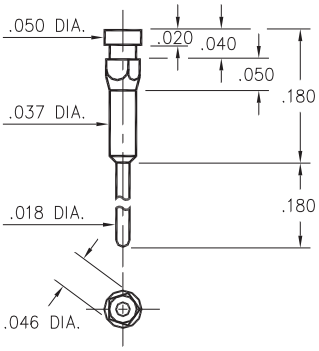


**0522-0-00-XX-00-00-03-0**
Pentagonal press-fit in .042
plated thru hole

## 0952

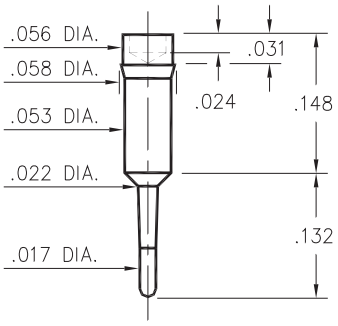


**0952-0-00-XX-00-00-03-0**
Press-fit in .056 mounting hole

## 0257

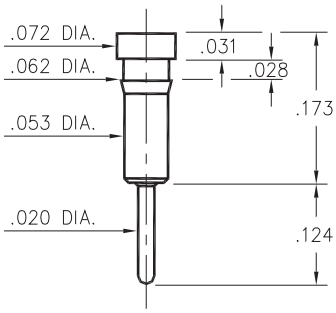


**0257-0-00-XX-00-00-03-0**
Press-fit in .059 mounting hole

## 8940

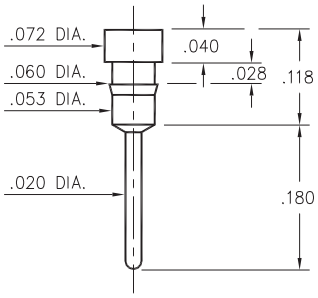


**8940-0-00-XX-00-00-03-0**
Press-fit in .057 mounting hole

## SPECIFICATIONS

**PIN MATERIAL:**
Brass Alloy 360, 1/2 Hard
(Except where noted)

**DIMENSION IN INCHES**
**TOLERANCES ON:**
LENGTHS: ±.005
DIAMETERS: ±.002
ANGLES: ± 2°

**ORDER CODE: XXXX - X - 00 - XX - 00 - 00 - 03 - 0**

**BASIC PART #**

**SPECIFY PIN FINISH:**
**01** 200µ" TIN/LEAD OVER NICKEL
◇ **80** 200µ" TIN OVER NICKEL (RoHS)
◇ **15** 10µ" GOLD OVER NICKEL (RoHS)
◇ **21** 20µ" GOLD OVER NICKEL (RoHS)
◇ **34** 50µ" GOLD OVER NICKEL (RoHS)

RoHS 2002/95/EC

## 0504/0505

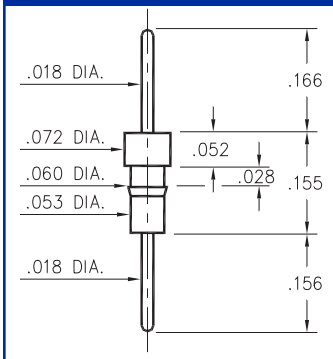


| Basic Part Number | Pin Material |
|---|---|
| 0504-0 | Ph Br. 544 |
| 0505-0 | Brass 360 |

**050X-0-00-XX-00-00-03-0**
Press-fit in .057 mounting hole

## 5510/5511

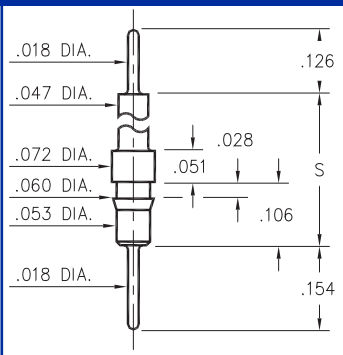


| Basic Part Number | Standoff Height S |
|---|---|
| 5510-0 | .331 |
| 5511-0 | .606 |

**551X-0-00-XX-00-00-03-0**
Press-fit in .057 mounting hole

## 4259

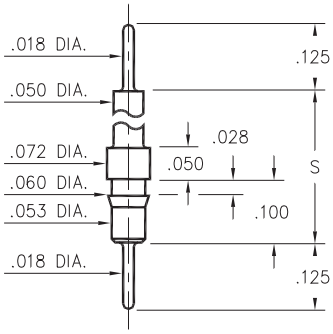


| Basic Part Number | Standoff Height S |
|---|---|
| 4259-1 | .210 |
| 4259-2 | .335 |
| 4259-3 | .585 |
| 4259-4 | .835 |

**4259-X-00-XX-00-00-03-0**
Press-fit in .057 mounting hole

## 3516

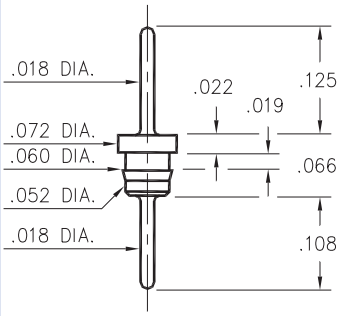


**3516-0-00-XX-00-00-03-0**
Press-fit in .057 mounting hole

## 8859

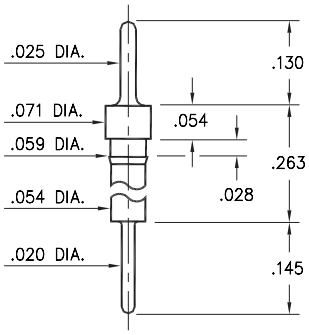


**8859-0-00-XX-00-00-03-0**
Press-fit in .056 mounting hole

## 6585

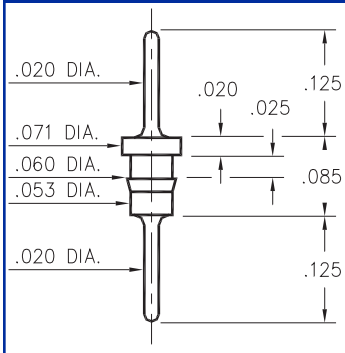


**6585-0-00-XX-00-00-03-0**
Press-fit in .057 mounting hole
Pin material is Ph Br 544 (B2)

## 3404

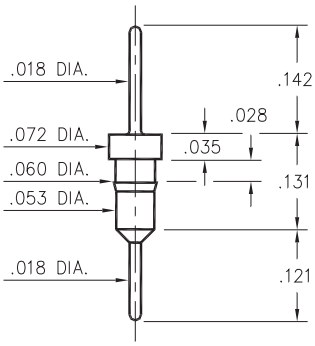


**3404-0-00-XX-00-00-03-0**
Press-fit in .057 mounting hole

## 3169

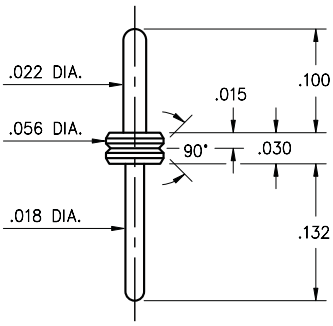


**3169-0-00-15-00-00-03-0**
V-Groove Header Pin
Also available on Kapton Tape

## SPECIFICATIONS

**PIN MATERIAL:**
Brass Alloy 360, 1/2 Hard
(Except where noted)

**DIMENSION IN INCHES**
**TOLERANCES ON:**
LENGTHS: ±.005
DIAMETERS: ±.002
ANGLES: ± 2°

**ORDER CODE: XXXX - X - 00 - XX - 00 - 00 - 03 - 0**

**BASIC PART #**

**SPECIFY PIN FINISH:**
**01** 200µ" TIN/LEAD OVER NICKEL
◇ **80** 200µ" TIN OVER NICKEL (RoHS)
◇ **15** 10µ" GOLD OVER NICKEL (RoHS)
◇ **21** 20µ" GOLD OVER NICKEL (RoHS)
◇ **34** 50µ" GOLD OVER NICKEL (RoHS)

RoHS 2002/95/EC

## 1752/6458

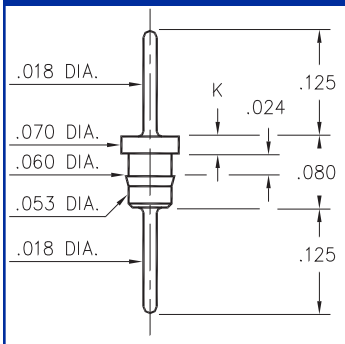


| Basic Part Number | Length K |
|---|---|
| 1752-0 | .020 |
| 6458-0 | .035 |

**XXXX-0-00-XX-00-00-03-0**
Press-fit in .057 mounting hole

## 3413/8404

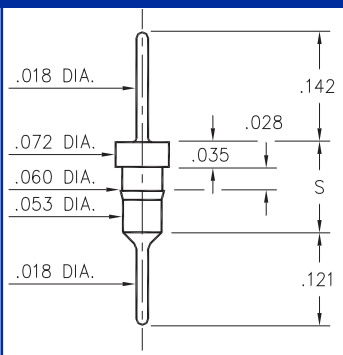


| Basic Part Number | Length S |
|---|---|
| 3413-0 | .118 |
| 8404-0 | .131 |

**X4XX-0-00-XX-00-00-03-0**
Press-fit in .057 mounting hole

## 9075

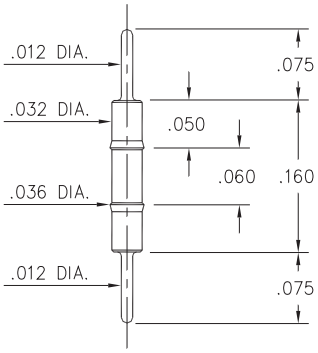


**9075-0-00-XX-00-00-03-0**
Press-fit in .034 mounting hole

## 9218

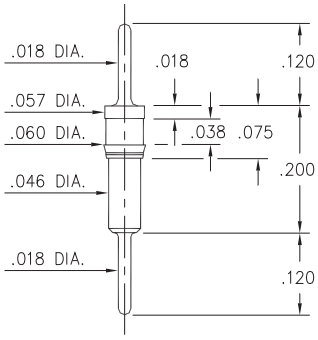


**9218-0-00-XX-00-00-03-0**
Press-fit in .057 mounting hole

## 2617

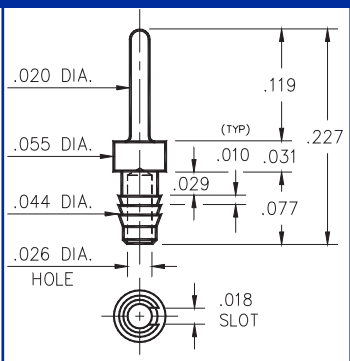


**2617-0-01-XX-00-00-03-0**
Compliant press-fit in .040 ±.003 hole. For .060 → .100 thick board

## 8995

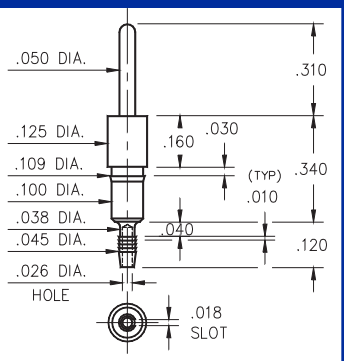


**8995-0-01-XX-00-00-03-0**
Compliant press-fit in .040 ±.003 hole. For .060 → .100 thick board

## 1933

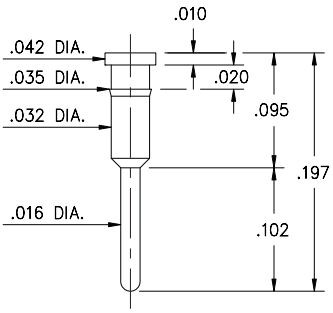


**1933-0-00-XX-00-00-03-0**
Press-fit in .034 mounting hole

## 1935

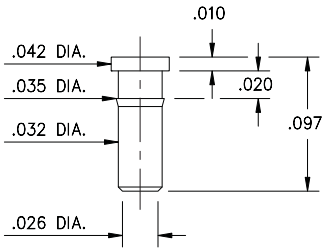


**1935-0-00-XX-00-00-03-0**
Press-fit in .034 mounting hole

## SPECIFICATIONS

**PIN MATERIAL:**
Brass Alloy 360, 1/2 Hard
(Except where noted)

**DIMENSION IN INCHES**
**TOLERANCES ON:**
LENGTHS: ±.005
DIAMETERS: ±.002
ANGLES: ± 2°

**ORDER CODE: XXXX - X - 0X - XX - 00 - 00 - 03 - 0**

**BASIC PART #**

**SPECIFY PIN FINISH:**
**01** 200µ" TIN/LEAD OVER NICKEL
◇ **80** 200µ" TIN OVER NICKEL (RoHS)
◇ **15** 10µ" GOLD OVER NICKEL (RoHS)
◇ **21** 20µ" GOLD OVER NICKEL (RoHS)
◇ **34** 50µ" GOLD OVER NICKEL (RoHS)

RoHS 2002/95/EC

## 3406

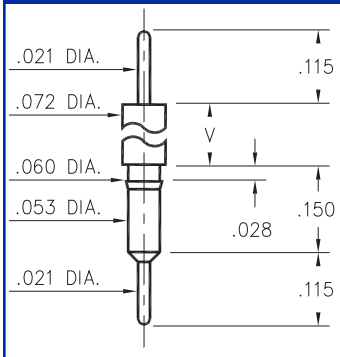


| Basic Part Number | Shoulder Height V |
|---|---|
| 3406-0 | .350 |

**340X-0-00-XX-00-00-03-0**
Press-fit in .057 mounting hole

## 0315

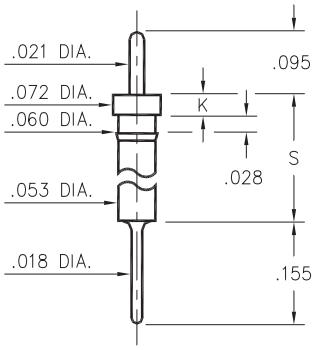


| Basic Part Number | Head Height K | Stand-off Height S |
|---|---|---|
| 0315-0 | .030 | .190 |
| 0315-1 | .040 | .430 |

**0315-X-00-XX-00-00-03-0**
Press-fit in .057 mounting hole
Pin material is Ph Br 544 (B2)

## 5503/5509

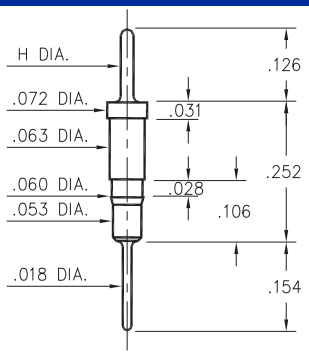


| Basic Part Number | Pin Diameter H |
|---|---|
| 5503-0 | .025 |
| 5509-0 | .018 |

**550X-0-00-XX-00-00-03-0**
Press-fit in .057 mounting hole

## 5504/5505

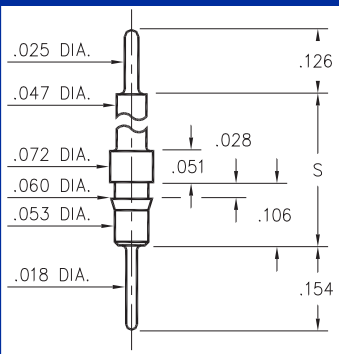


| Basic Part Number | Standoff Height S |
|---|---|
| 5504-0 | .331 |
| 5505-0 | .606 |

**550X-0-00-XX-00-00-03-0**
Press-fit in .057 mounting hole

## 3409

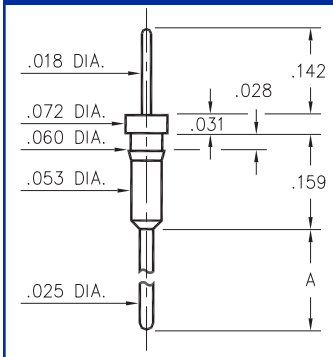


| Basic Part Number | Pin Length A |
|---|---|
| 3409-1 | .210 |
| 3409-2 | .420 |

**3409-X-00-XX-00-00-03-0**
Press-fit in .057 mounting hole

## 5011

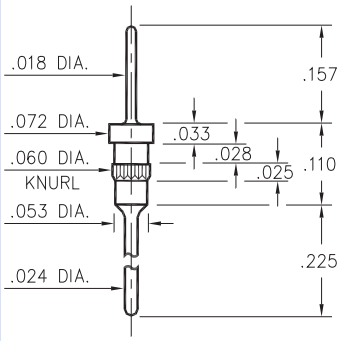


**5011-0-00-XX-00-00-03-0**
Press-fit in .057 mounting hole

## 5113

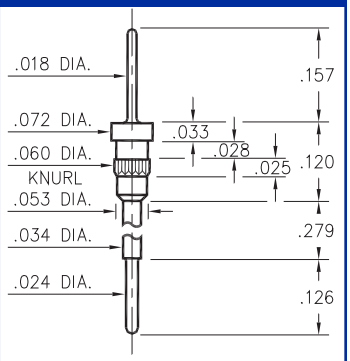


**5113-0-00-XX-00-00-03-0**
Press-fit in .057 mounting hole

## SPECIFICATIONS

**PIN MATERIAL:**
Brass Alloy 360, 1/2 Hard
(Except where noted)

**DIMENSION IN INCHES**
**TOLERANCES ON:**
LENGTHS: ±.005
DIAMETERS: ±.002
ANGLES: ± 2°

**ORDER CODE: XXXX - X - 00 - XX - 00 - 00 - 03 - 0**

**BASIC PART #**

**SPECIFY PIN FINISH:**
**01** 200µ" TIN/LEAD OVER NICKEL
◇ **80** 200µ" TIN OVER NICKEL (RoHS)
◇ **15** 10µ" GOLD OVER NICKEL (RoHS)
◇ **21** 20µ" GOLD OVER NICKEL (RoHS)
◇ **34** 50µ" GOLD OVER NICKEL (RoHS)

RoHS 2002/95/EC

## 3400⇨3402/3405/3410

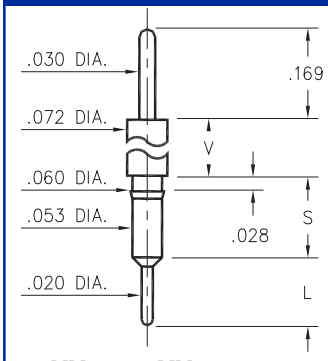


| Basic Part Number | Shoulder Height V | Length S | Length L |
|---|---|---|---|
| 3402-0 | .052 | .138 | .115 |
| 3401-0 | .100 | .136 | .115 |
| 3405-0 | .169 | .146 | .115 |
| 3400-0 | .481 | .145 | .115 |
| 3410-0 | .934 | .136 | .124 |

**34XX-0-00-XX-00-00-03-0**
Press-fit in .057 mounting hole

## 3411

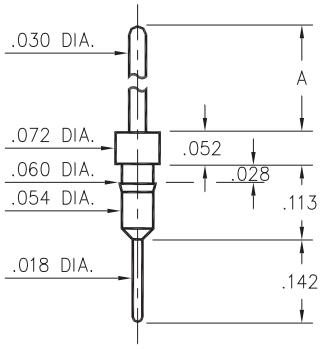


| Basic Part Number | Pin Length A |
|---|---|
| 3411-0 | .417 |
| 3411-1 | .217 |

**3411-X-00-XX-00-00-03-0**
Press-fit in .057 mounting hole

## 0600

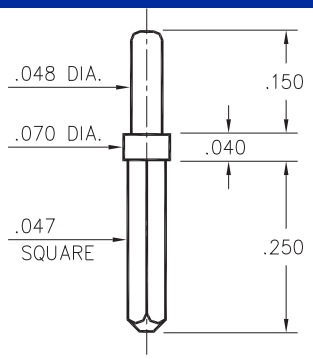


**0600-0-05-XX-00-00-01-0**
Solder mount in .052 mounting hole

## 0290

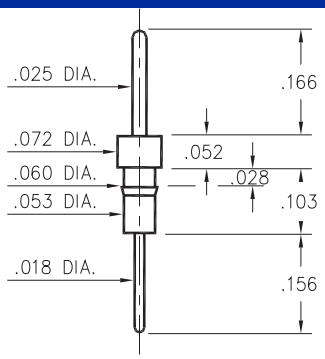


**0290-0-00-XX-00-00-03-0**
Press-fit in .057 mounting hole

## 7007

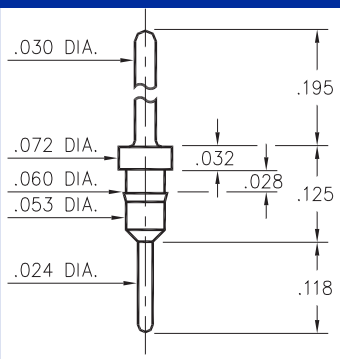


**7007-0-00-XX-00-00-03-0**
Press-fit in .057 mounting hole

## 5016

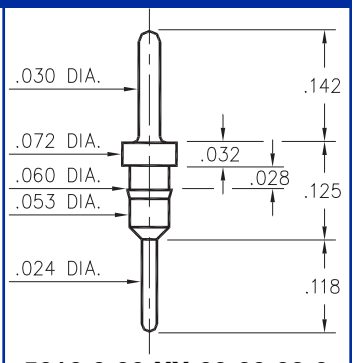


**5016-0-00-XX-00-00-03-0**
Press-fit in .057 mounting hole

## 5005

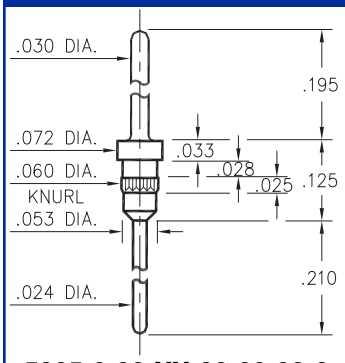


**5005-0-00-XX-00-00-03-0**
Press-fit in .057 mounting hole

## 5107

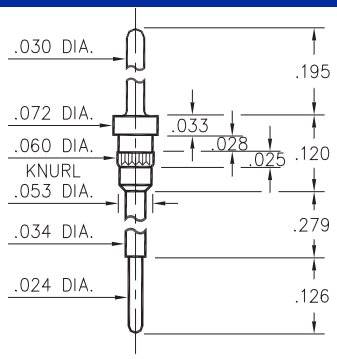


**5107-0-00-XX-00-00-03-0**
Press-fit in .057 mounting hole

## 8919

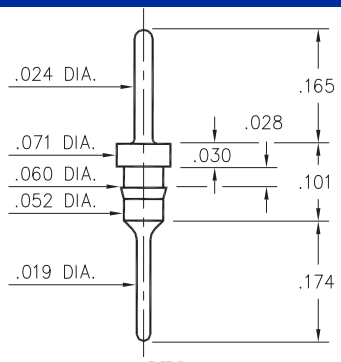


**8919-0-00-XX-00-00-03-0**
Press-fit in .057 mounting hole

## 3077

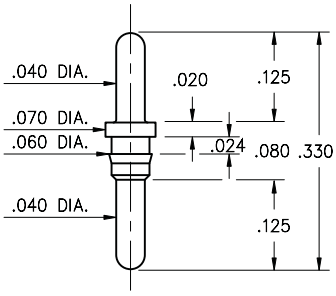


**3077-0-00-XX-00-00-03-0**
Press-fit in .057 mounting hole

## SPECIFICATIONS

**PIN MATERIAL:**
Brass Alloy 360, 1/2 Hard
(Except where noted)

**DIMENSION IN INCHES**
**TOLERANCES ON:**
LENGTHS: ±.005
DIAMETERS: ±.002
ANGLES: ± 2°

**ORDER CODE: XXXX - X - 0X - XX - 00 - 00 - XX - 0**

**BASIC PART #**

**SPECIFY PIN FINISH:**
**01** 200µ" TIN/LEAD OVER NICKEL
◇ **80** 200µ" TIN OVER NICKEL (RoHS)
◇ **15** 10µ" GOLD OVER NICKEL (RoHS)
◇ **21** 20µ" GOLD OVER NICKEL (RoHS)
◇ **34** 50µ" GOLD OVER NICKEL (RoHS)

RoHS 2002/95/EC

## 3408

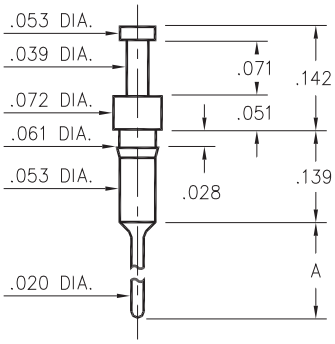


| Basic Part Number | Pin Length A |
|---|---|
| 3408-1 | .121 |
| 3408-2 | .181 |

**3408-X-00-XX-00-00-03-0**
Press-fit in .057 mounting hole

## 0270/0282

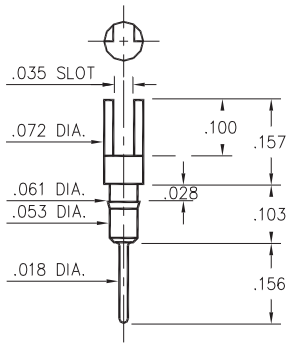


| Basic Part Number | Pin Material |
|---|---|
| 0270-0 | Ph Br 544 (B2) |
| 0282-0 | Brass 360 |

**02XX-0-01-XX-00-00-03-0**
Press-fit in .057 mounting hole

## 0700

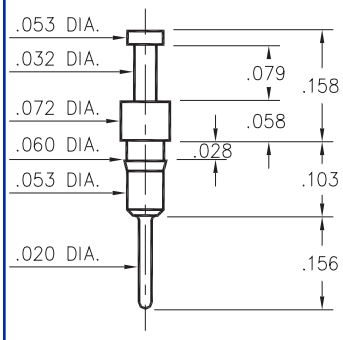


**0700-0-00-XX-00-00-03-0**
Press-fit in .057 mounting hole

## 8006

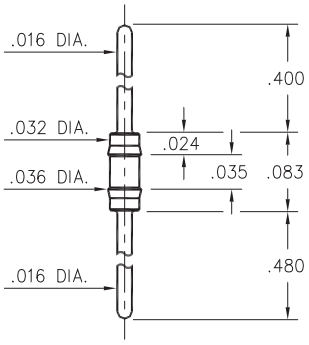


**8006-0-00-XX-00-00-03-0**
Press-fit in .034 mounting hole

## 0265

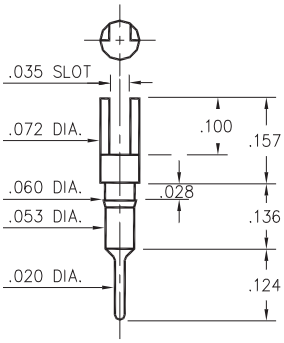


**0265-0-01-XX-00-00-03-0**
Press-fit in .057 mounting hole

## 0275

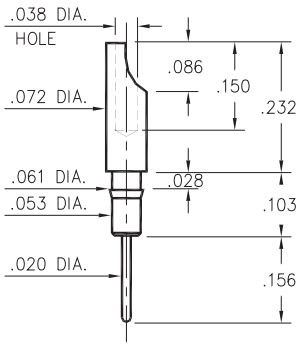


**0275-0-01-XX-00-00-03-0**
Press-fit in .057 mounting hole
Pin material is Ph. Br. 544 (B2)

## 0272

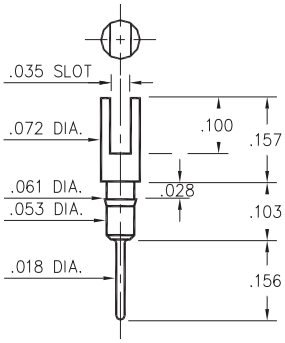


**0272-0-01-XX-00-00-03-0**
Press-fit in .057 mounting hole

## 8000

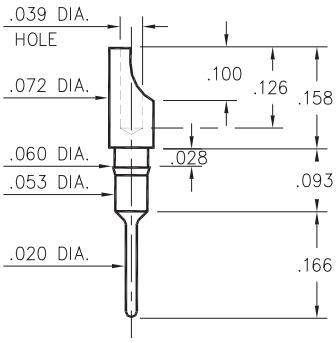


**8000-0-01-XX-00-00-03-0**
Press-fit in .057 mounting hole

## 3603

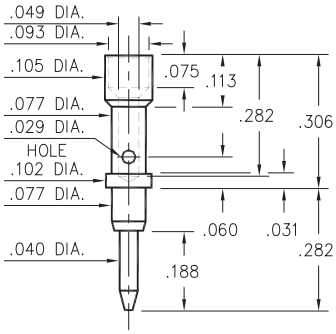


**3603-0-07-XX-00-00-08-0**
Annealed
#20 Crimp barrel

## 9976

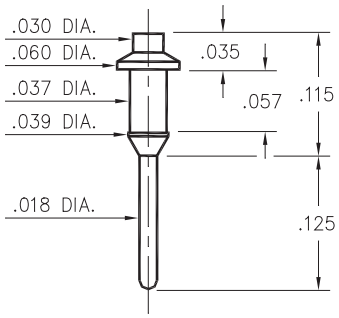


**9976-0-00-XX-00-00-03-0**
Press-fit in .038 mounting hole

## SPECIFICATIONS

**PIN MATERIAL:**
Brass Alloy 360, 1/2 Hard
(Except where noted)

**DIMENSION IN INCHES**
**TOLERANCES ON:**
LENGTHS: ±.005
DIAMETERS: ±.002
ANGLES: ± 2°

**ORDER CODE: XXXX - X - 0X - XX - 00 - 00 - XX - 0**

**BASIC PART #**

**SPECIFY PIN FINISH:**
**01** 200µ" TIN/LEAD OVER NICKEL
◇ **80** 200µ" TIN OVER NICKEL (RoHS)
◇ **15** 10µ" GOLD OVER NICKEL (RoHS)
◇ **21** 20µ" GOLD OVER NICKEL (RoHS)
◇ **34** 50µ" GOLD OVER NICKEL (RoHS)

RoHS 2002/95/EC

## 3117

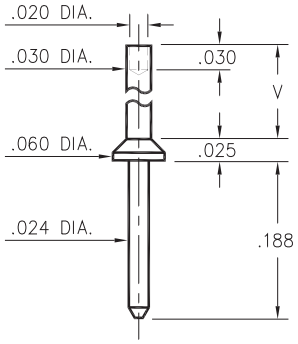


| Basic Part Number | Board Thickness | Length V |
|---|---|---|
| 3117-1 | .031 | .047 |
| 3117-2 | .062 | .078 |
| 3117-3 | .094 | .110 |
| 3117-4 | .125 | .141 |

**3117-X-00-XX-00-00-08-0**
Swage mount in .035 hole

## 3114/3115

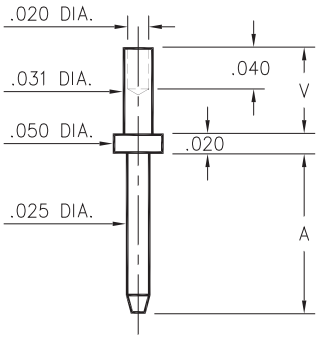


| Basic Part Number | Board Thick-ness | Length A | Length V |
|---|---|---|---|
| 3114-1 | .031 | .150 | .051 |
| 3114-2 | .062 | .150 | .082 |
| 3115-1 | .031 | .300 | .051 |
| 3115-2 | .062 | .300 | .082 |

**311X-X-00-XX-00-00-08-0**
Swage mount in .035 mounting hole

## 3112

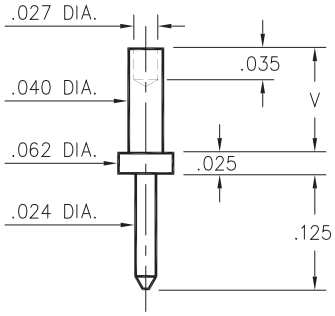


| Basic Part Number | Board Thickness | Length V |
|---|---|---|
| 3112-1 | .031 | .051 |
| 3112-2 | .062 | .082 |
| 3112-3 | .094 | .113 |

**3112-X-00-XX-00-00-08-0**
Swage mount in .043 hole

## 3118/3119

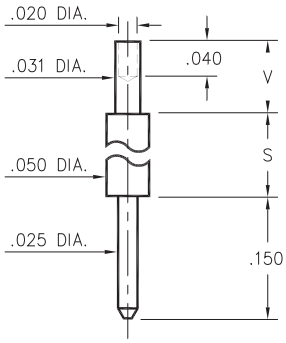


| Basic Part Number | Board Thick-ness | Length S | Length V |
|---|---|---|---|
| 3118-1 | .031 | .170 | .051 |
| 3118-2 | .062 | .170 | .082 |
| 3119-1 | .031 | .420 | .051 |
| 3119-2 | .062 | .420 | .082 |

**311X-X-00-XX-00-00-08-0**
Swage mount in .035 hole

## 3139

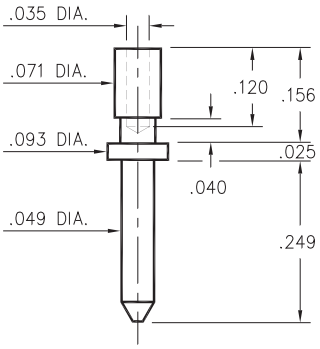


**3139-0-00-XX-00-00-08-0**
Wire Termination

## 3602

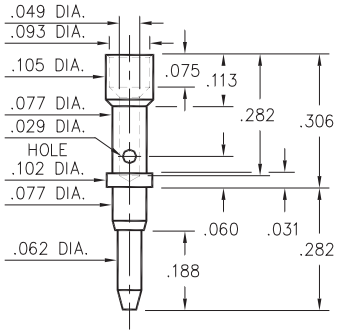


**3602-0-07-XX-00-00-08-0**
Annealed
#20 Crimp barrel

## 3131

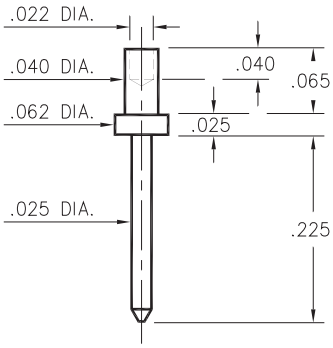


**3131-1-00-XX-00-00-08-0**
Swage mount in .043 hole

## 0912

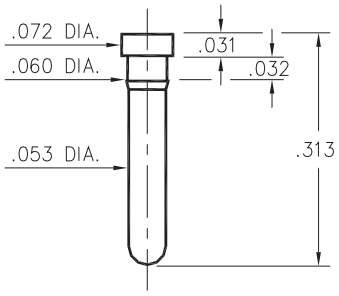


**0912-0-00-XX-00-00-03-0**
Press-fit in .057 mounting hole

## SPECIFICATIONS

**PIN MATERIAL:**
Brass Alloy 360, 1/2 Hard
( Except Swage pins which are annealed )

**DIMENSION IN INCHES**
**TOLERANCES ON:**
LENGTHS: ±.005
DIAMETERS: ±.002
ANGLES: ± 2°

**ORDER CODE: XXXX - X - 0X - XX - 00 - 00 - XX - 0**

**BASIC PART #**

**SPECIFY PIN FINISH:**
**01** 200µ" TIN/LEAD OVER NICKEL
◇ **80** 200µ" TIN OVER NICKEL (RoHS)
◇ **15** 10µ" GOLD OVER NICKEL (RoHS)
◇ **21** 20µ" GOLD OVER NICKEL (RoHS)
◇ **34** 50µ" GOLD OVER NICKEL (RoHS)

RoHS 2002/95/EC

## 5102

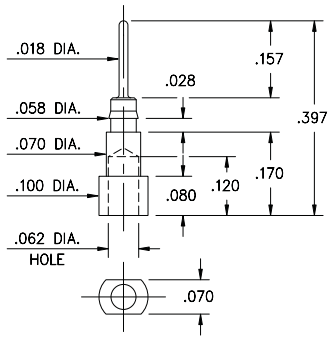


**5102-0-00-XX-00-00-33-0**
Press-fit in .057 mounting hole

## 1502

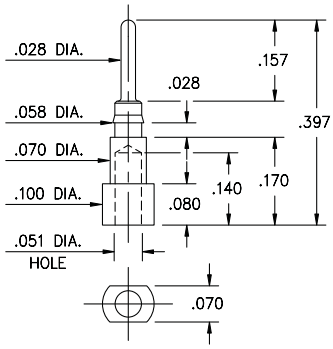


**1502-0-00-XX-00-00-03-0**
Press-fit in .057 mounting hole

## 2956-0

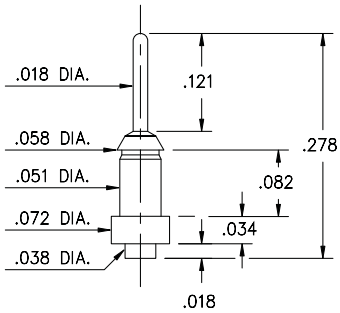


**2956-0-00-XX-00-00-03-0**
Surface mount

## 2956-1

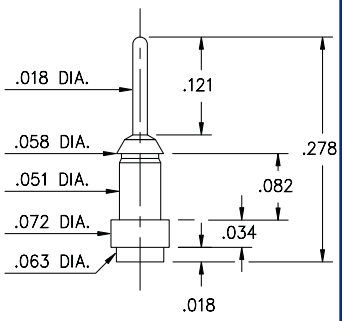


**2956-1-00-XX-00-00-03-0**
Surface mount

## 8876

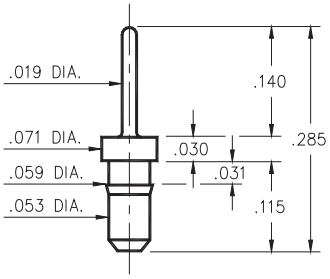


**8876-0-00-XX-00-00-03-0**
Press-fit in .057 mounting hole

## 0259/0286/1941

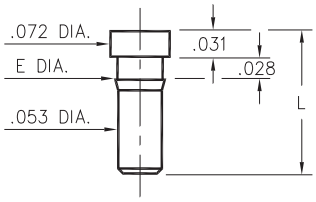


| Basic Part Number | Length L | Barb Dia. E | Mounting Hole |
|---|---|---|---|
| 0259-0 | .173 | .062 | .059 |
| 0286-0 | .115 | .060 | .057 |
| 1941-0 | .169 | .058 | .057 |

**02XX-0-00-XX-00-00-03-0**
Press-fit in .057/.059 mounting hole

## 1938

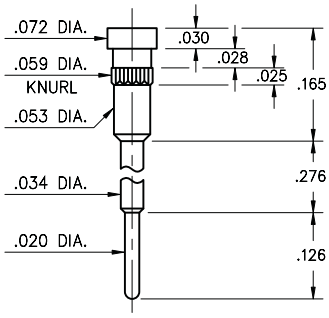


**1938-0-00-XX-00-00-03-0**
Press-fit in .057 mounting hole

## 1940

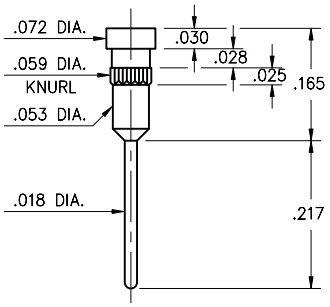


**1940-0-00-XX-00-00-03-0**
Press-fit in .057 mounting hole

## 1942

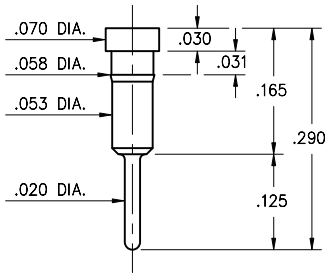


**1942-0-00-XX-00-00-03-0**
Press-fit in .057 mounting hole

## 3024

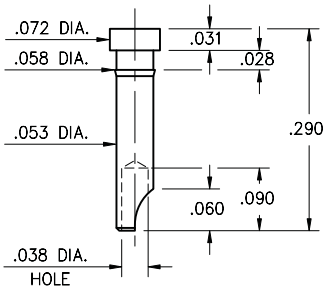


**3024-0-01-XX-00-00-03-0**
Press-fit in .057 mounting hole

## 3000

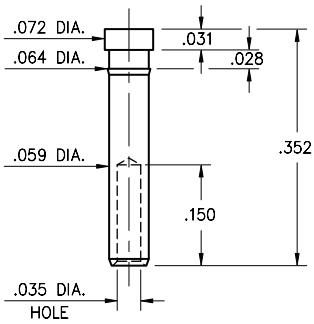


**3000-0-00-XX-00-00-03-0**
Press-fit in .061 mounting hole

## SPECIFICATIONS

**PIN MATERIAL:**
Brass Alloy 360, 1/2 Hard
(Except Swage pins which are annealed)

**DIMENSION IN INCHES**
**TOLERANCES ON:**
LENGTHS: ±.005
DIAMETERS: ±.002
ANGLES: ± 2°

**ORDER CODE: XXXX - X - 0X - XX - 00 - 00 - XX - 0**

**BASIC PART #**

**SPECIFY PIN FINISH:**
**01** 200µ" TIN/LEAD OVER NICKEL
◇ **80** 200µ" TIN OVER NICKEL (RoHS)
◇ **15** 10µ" GOLD OVER NICKEL (RoHS)
◇ **21** 20µ" GOLD OVER NICKEL (RoHS)
◇ **34** 50µ" GOLD OVER NICKEL (RoHS)

RoHS 2002/95/EC

## 3130/3134/3151

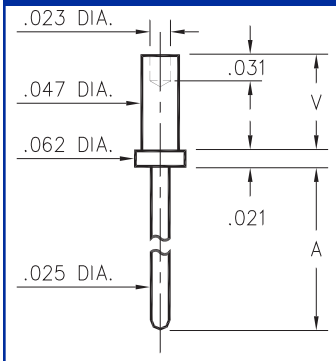


| Basic Part Number | Board Thick-ness | Length A | Length V |
|---|---|---|---|
| 3134-1 | .031 | .079 | .051 |
| 3134-2 | .062 | .079 | .082 |
| 3134-3 | .094 | .079 | .113 |
| 3134-4 | .125 | .079 | .145 |
| 3130-1 | .031 | .179 | .051 |
| 3130-2 | .062 | .179 | .082 |
| 3130-3 | .094 | .179 | .113 |
| 3130-4 | .125 | .179 | .145 |
| 3151-1 | .031 | .479 | .051 |
| 3151-2 | .062 | .479 | .082 |
| 3151-3 | .094 | .479 | .113 |
| 3151-4 | .125 | .479 | .145 |

**31XX-X-00-XX-00-00-08-0**
Swage mount in .052 hole

## 3113

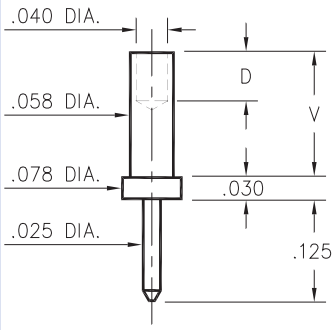


| Basic Part Number | Board Thick-ness | Length V | Depth D |
|---|---|---|---|
| 3113-1 | .031 | .062 | .040 |
| 3113-2 | .062 | .094 | .062 |
| 3113-3 | .094 | .125 | .062 |
| 3113-4 | .125 | .156 | .062 |

**3113-X-00-XX-00-00-08-0**
Swage mount in .062 hole

## 3360

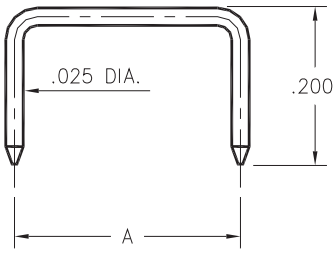


| Basic Part Number | Pin Centers A |
|---|---|
| 3360-1 | .200 |
| 3360-2 | .250 |
| 3360-3 | .300 |
| 3360-4 | .400 |
| 3360-5 | .500 |

**3360-X-14-XX-00-00-08-0**
Shorting Jumper

## 3301⇒ 3304

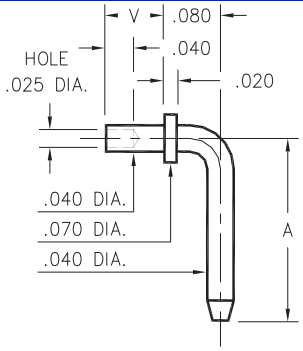


| Basic Part Number | Pin Centers A |
|---|---|
| 3301-X | .257 |
| 3302-X | .357 |
| 3303-X | .375 |
| 3304-X | .562 |

| - X - | Board Thickness | Length V |
|---|---|---|
| 1 | .031 | .051 |
| 2 | .062 | .082 |
| 3 | .094 | .113 |

**330X-X-14-XX-00-00-08-0**
Specify board thickness
Swage mount in .043 hole

## 3620

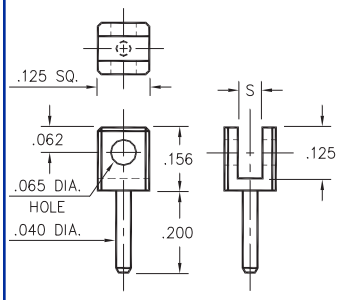


| Basic Part Number | Board Thickness | Slot S |
|---|---|---|
| 3620-1 | .031 | .047 |
| 3620-2 | .062 | .075 |

**3620-X-32-XX-00-00-08-0**
Board edge rivet mount

## 0940

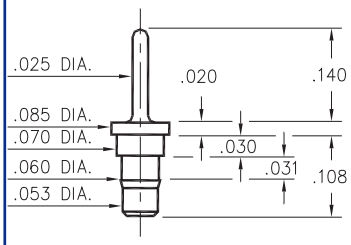


**0940-0-00-XX-00-00-03-0**
Press-fit in .057 mounting hole

## 3621

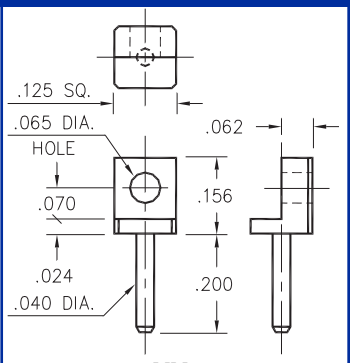


**3621-0-32-XX-00-00-08-0**
Board edge rivet mount

## SPECIFICATIONS

**PIN MATERIAL:**
Brass Alloy 360, 1/2 Hard
( Except Swage pins which are annealed )

**DIMENSION IN INCHES**
**TOLERANCES ON:**
LENGTHS: ±.005
DIAMETERS: ±.002
ANGLES: ± 2°

**ORDER CODE: XXXX - X - XX - XX - 00 - 00 - XX - 0**

**BASIC PART #**

**SPECIFY PIN FINISH:**
**01** 200µ" TIN/LEAD OVER NICKEL
◇ **80** 200µ" TIN OVER NICKEL (RoHS)
◇ **15** 10µ" GOLD OVER NICKEL (RoHS)
◇ **21** 20µ" GOLD OVER NICKEL (RoHS)
◇ **34** 50µ" GOLD OVER NICKEL (RoHS)

RoHS 2002/95/EC

## 3110/3111

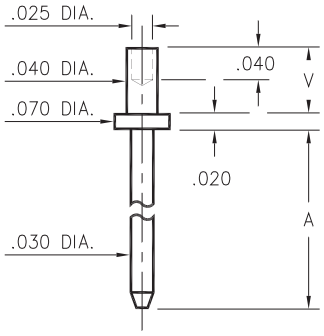


| Basic Part Number | Board Thick-ness | Length A | Length V |
|---|---|---|---|
| 3110-1 | .031 | .150 | .051 |
| 3110-2 | .062 | .150 | .082 |
| 3110-3 | .094 | .150 | .113 |
| 3111-1 | .031 | .300 | .051 |
| 3111-2 | .062 | .300 | .082 |
| 3111-3 | .094 | .300 | .113 |

**311X-X-00-XX-00-00-08-0**
Swage mount in .043 hole

## 3150

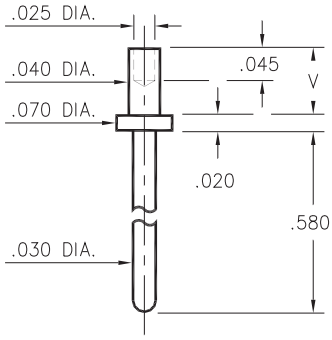


| Basic Part Number | Board Thickness | Length V |
|---|---|---|
| 3150-1 | .031 | .051 |
| 3150-2 | .062 | .082 |

**3150-X-00-XX-00-00-08-0**
Swage mount in .043 mounting hole

## 3136/3137

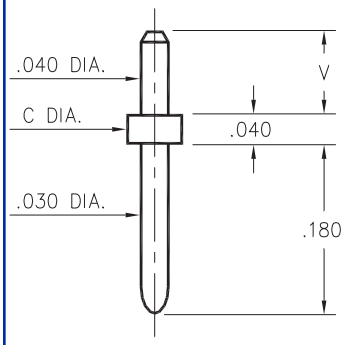


| Basic Part Number | Flange Dia. C | Board Thick-ness | Length V |
|---|---|---|---|
| 3136-1 | | .062 | .082 |
| 3136-2 | .078 | .094 | .110 |
| 3136-3 | | .125 | .145 |
| 3137-1 | | .062 | .082 |
| 3137-2 | | .094 | .110 |
| 3137-3 | .062 | .125 | .145 |
| 3137-4 | | .156 | .185 |

**313X-X-00-XX-00-00-08-0**
Solder mount in .043 mounting hole

## 3148

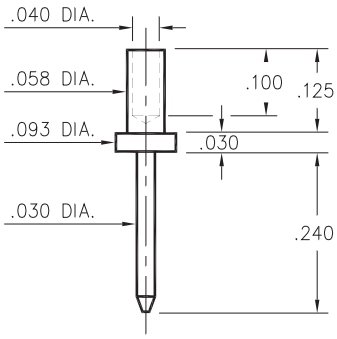


**3148-3-00-XX-00-00-08-0**
Swage mount in .062 hole
for .094 thick board

## 8815

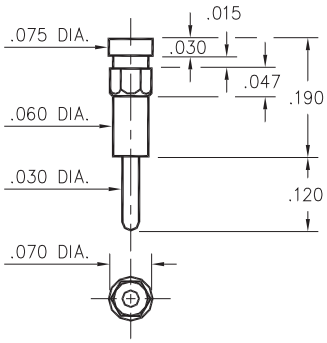


**8815-0-00-XX-00-00-03-0**
Hex press-fit in .066
plated thru hole

## 6821

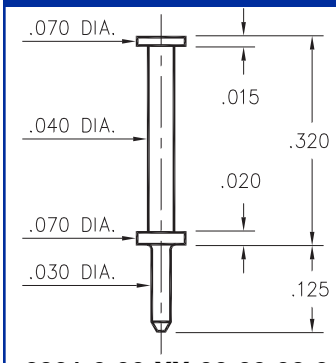


**6821-0-00-XX-00-00-08-0**
Wire Termination

## 3132

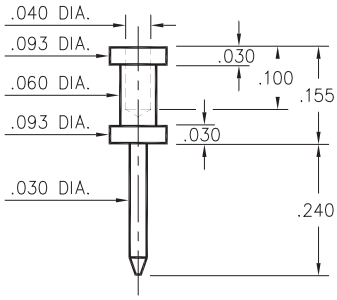


**3132-0-00-XX-00-00-08-0**
Wire Termination
Material is annealed

## 5601

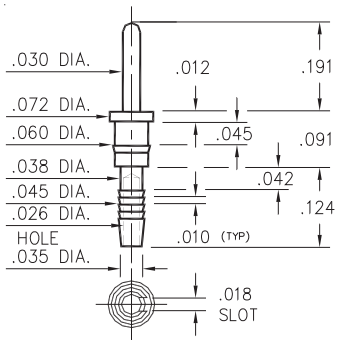


**5601-0-01-XX-00-00-03-0**
Compliant press-fit in .040±.003 plated hole. For .060→.100 thick board.

## 5602

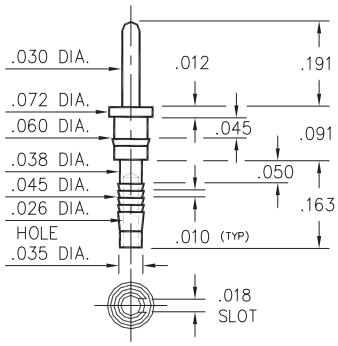


**5602-0-01-XX-00-00-03-0**
Compliant press-fit in .040±.003 plated hole. For .090→.130 thick board.

## SPECIFICATIONS

**PIN MATERIAL:**
Brass Alloy 360, 1/2 Hard
( Except Swage pins which are annealed )

**DIMENSION IN INCHES**
**TOLERANCES ON:**
LENGTHS: ±.005
DIAMETERS: ±.002
ANGLES: ± 2°

**ORDER CODE: XXXX - X - 0X - XX - 00 - 00 - XX - 0**

**BASIC PART #**

**SPECIFY PIN FINISH:**
**01** 200µ" TIN/LEAD OVER NICKEL
◇ **80** 200µ" TIN OVER NICKEL (RoHS)
◇ **15** 10µ" GOLD OVER NICKEL (RoHS)
◇ **21** 20µ" GOLD OVER NICKEL (RoHS)
◇ **34** 50µ" GOLD OVER NICKEL (RoHS)

RoHS 2002/95/EC

## 3120

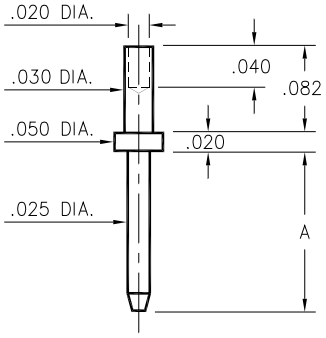


| Basic Part Number | Length A |
|---|---|
| 3120-1 | .205 |
| 3120-2 | .250 |

**3120-X-00-XX-00-00-08-0**
Swage mount in .034 mounting hole

## 3122 ⇒ 3153

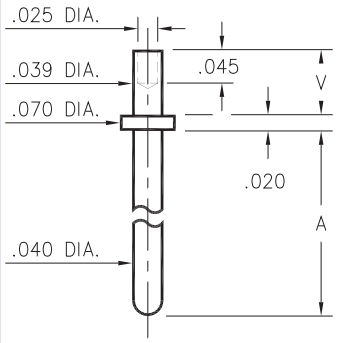


| Basic Part Number | Pin Length A |
|---|---|
| 3153-X | .180 |
| 3141-X | .230 |
| 3122-X | .280 |
| 3149-X | .380 |
| 3123-X | .580 |
| 3140-X | .780 |
| 3124-X | .880 |

| - X - | Board Thickness | Length V |
|---|---|---|
| 1 | .031 | .051 |
| 2 | .062 | .082 |

**31XX-X-00-XX-00-00-08-0**
Swage mount in .043 hole

## 3101 ⇒ 3106

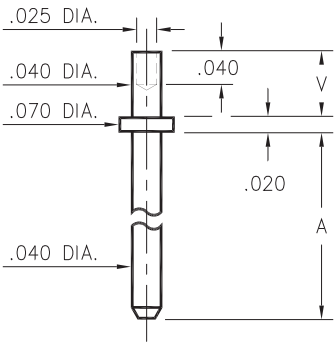


| Basic Part Number | Pin Length A |
|---|---|
| 3101-X | .150 |
| 3102-X | .188 |
| 3103-X | .300 |
| 3104-X | .500 |
| 3105-X | .750 |
| 3106-X | 1.000 |

| - X - | Board Thickness | Length V |
|---|---|---|
| 1 | .031 | .051 |
| 2 | .062 | .082 |
| 3 | .094 | .113 |

**310X-X-00-XX-00-00-08-0**
Swage mount in .043 hole

## 3221 ⇒ 3223

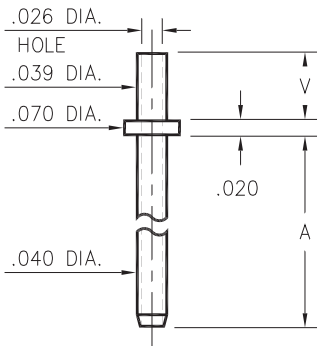


| Basic Part Number | Pin Length A |
|---|---|
| 3221-X | .100 |
| 3222-X | .150 |
| 3223-X | .300 |

| - X - | Board Thickness | Length V |
|---|---|---|
| 1 | .031 | .051 |
| 2 | .062 | .082 |
| 3 | .094 | .113 |

**322X-X-00-XX-00-00-08-0**
Swage mount in .043 hole

## 3125/3126

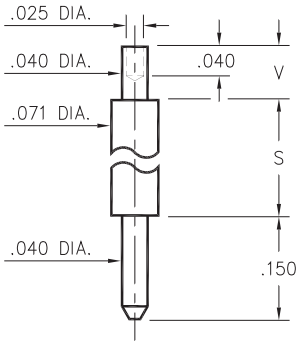


| Basic Part Number | Pin Length S |
|---|---|
| 3125-X | .170 |
| 3126-X | .420 |

| - X - | Board Thickness | Length V |
|---|---|---|
| 1 | .031 | .051 |
| 2 | .062 | .082 |
| 3 | .094 | .113 |

**312X-X-00-XX-00-00-08-0**
Swage mount in .043 hole

## 0995

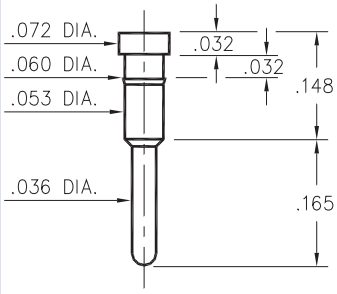


**0995-0-00-XX-00-00-03-0**
Press-fit in .057 mounting hole

## 4526

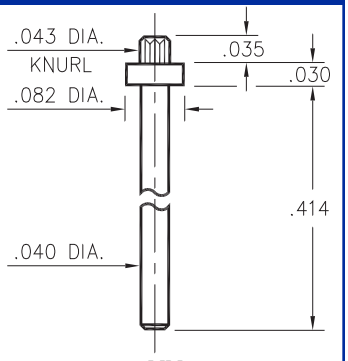


**4526-0-00-XX-00-00-03-0**
Press-fit in .040 mounting hole

## SPECIFICATIONS

**PIN MATERIAL:**
Brass Alloy 360, 1/2 Hard
( Except Swage pins which are annealed )

**DIMENSION IN INCHES**
**TOLERANCES ON:**
LENGTHS: ±.005
DIAMETERS: ±.002
ANGLES: ± 2°

**ORDER CODE: XXXX - X - 00 - XX - 00 - 00 - XX - 0**

**BASIC PART #**

**SPECIFY PIN FINISH:**
**01** 200µ" TIN/LEAD OVER NICKEL
◇ **80** 200µ" TIN OVER NICKEL (RoHS)
◇ **15** 10µ" GOLD OVER NICKEL (RoHS)
◇ **21** 20µ" GOLD OVER NICKEL (RoHS)
◇ **34** 50µ" GOLD OVER NICKEL (RoHS)

RoHS 2002/95/EC

## 8600/8954/8955

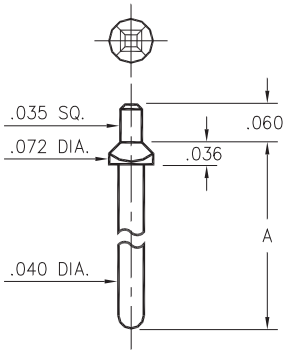


| Basic Part Number | Pin Length A |
|---|---|
| 8600-0 | .400 |
| 8600-1 | .850 |
| 8600-2 | 1.200 |
| 8954-0 | .136 |
| 8955-0 | .655 |

**8XXX-X-05-XX-00-00-03-0**
Square press-fit in .043 plated thru hole

## 3159

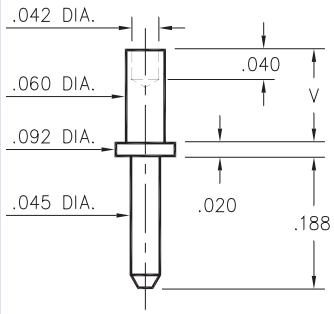


| Basic Part Number | Board Thickness | Length V |
|---|---|---|
| 3159-1 | .031 | .062 |
| 3159-2 | .062 | .094 |
| 3159-3 | .094 | .125 |
| 3159-4 | .125 | .156 |

**3159-X-00-XX-00-00-08-0**
Swage mount in .064 hole

## 8952

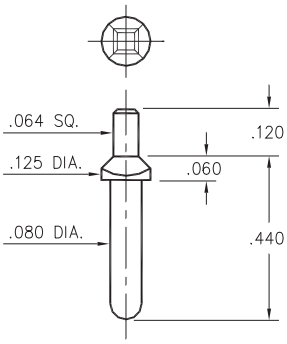


**8952-0-05-XX-00-00-03-0**
Square press-fit in .087 plated thru hole

## 8953

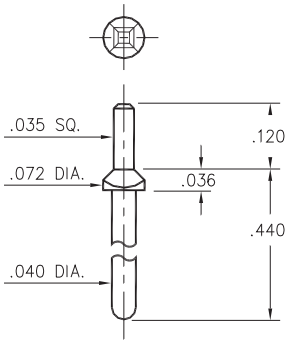


**8953-0-05-XX-00-00-03-0**
Square press-fit in .047 plated thru hole

## 3230

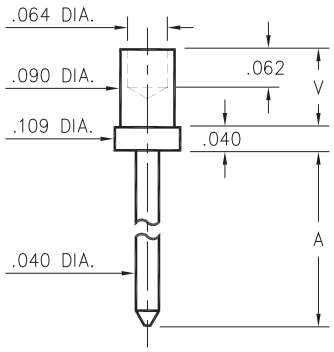


| Basic Part Number | Board Thick-ness | Length A | Length V |
|---|---|---|---|
| 3230-1 | .031 | .202 | .065 |
| 3230-2 | .062 | .228 | .095 |
| 3230-3 | .094 | .258 | .125 |
| 3230-4 | .125 | .288 | .155 |

**3230-X-00-XX-00-00-08-0**
Swage mount in .094 hole

## 3146

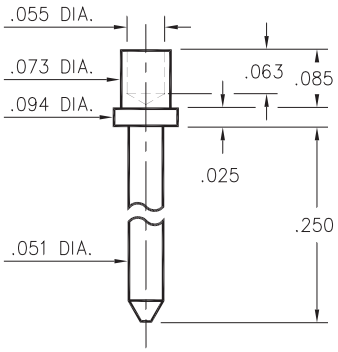


**3146-2-00-XX-00-00-08-0**
Swage mount in .076 hole.
For .062 thick board

## 3142

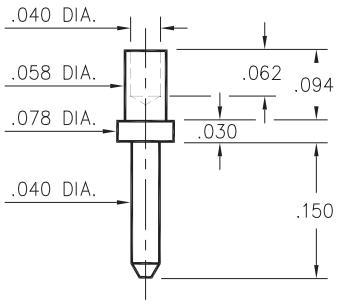


**3142-2-00-XX-00-00-08-0**
Swage mount in .062 hole.
For .062 thick board

## 3232

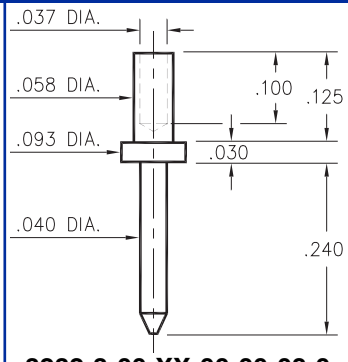


**3232-3-00-XX-00-00-08-0**
Swage mount in .062 hole.
For .094 thick board

## 3145

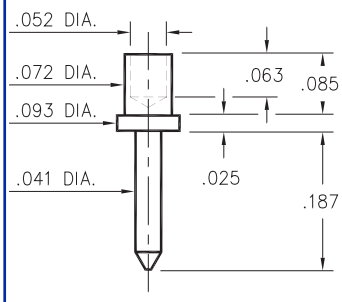


**3145-2-00-XX-00-00-08-0**
Swage mount in .076 hole.
For .062 thick board

## SPECIFICATIONS

**PIN MATERIAL:**
Brass Alloy 360, 1/2 Hard
( Except Swage pins which are annealed )

**DIMENSION IN INCHES**
**TOLERANCES ON:**
LENGTHS: ±.005
DIAMETERS: ±.002
ANGLES: ± 2°

**ORDER CODE: XXXX - X - 0X - XX - 00 - 00 - XX - 0**

**BASIC PART #**

**SPECIFY PIN FINISH:**
**01** 200µ" TIN/LEAD OVER NICKEL
◇ **80** 200µ" TIN OVER NICKEL (RoHS)
◇ **15** 10µ" GOLD OVER NICKEL (RoHS)
◇ **21** 20µ" GOLD OVER NICKEL (RoHS)
◇ **34** 50µ" GOLD OVER NICKEL (RoHS)

RoHS 2002/95/EC

## 3231

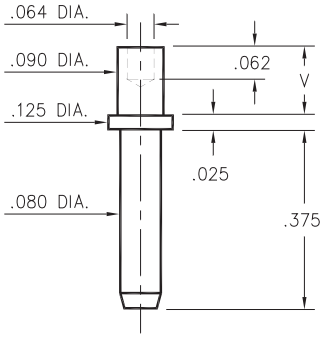


| Basic Part Number | Board Thickness | Length V |
|---|---|---|
| 3231-2 | .062 | .094 |
| 3231-3 | .094 | .125 |
| 3231-4 | .125 | .156 |

**3231-X-00-XX-00-00-08-0**
Swage mount in .094 hole.

## 3609

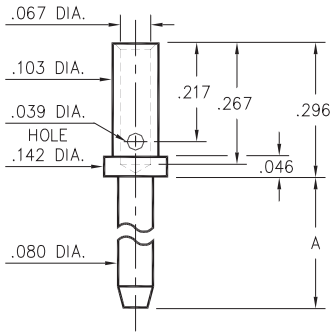


| Basic Part Number | Pin Length A |
|---|---|
| 3609-1 | .200 |
| 3609-2 | .375 |
| 3609-3 | .500 |

**3609-X-07-XX-00-00-08-0**
#16A Crimp barrel

## 3601

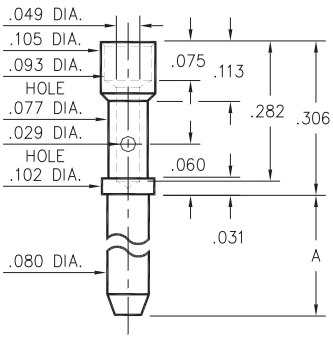


| Basic Part Number | Pin Length A |
|---|---|
| 3601-1 | .200 |
| 3601-2 | .375 |
| 3601-3 | .500 |

**3601-X-07-XX-00-00-08-0**
#20A Crimp barrel

## 3133/3138/3152

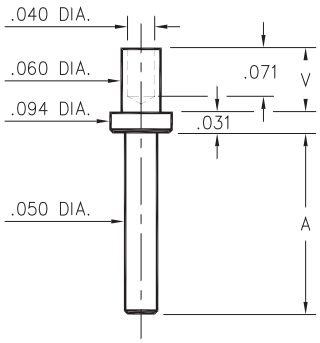


| Basic Part Number | Pin Length A |
|---|---|
| 3152-X | .094 |
| 3133-X | .219 |
| 3138-X | .282 |

| - X - | Board Thickness | Length V |
|---|---|---|
| 1 | .031 | .063 |
| 2 | .062 | .094 |
| 3 | .094 | .125 |
| 4 | .125 | .156 |

**31XX-X-00-XX-00-00-08-0**
Specify board thickness
Swage mount in .064 hole

## 3144

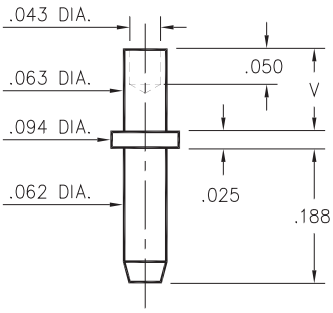


| Basic Part Number | Board Thickness | Length V |
|---|---|---|
| 3144-1 | .031 | .053 |
| 3144-2 | .062 | .084 |
| 3144-3 | .094 | .115 |

**3144-X-00-XX-00-00-08-0**
Swage mount in .067 hole.

## 3233

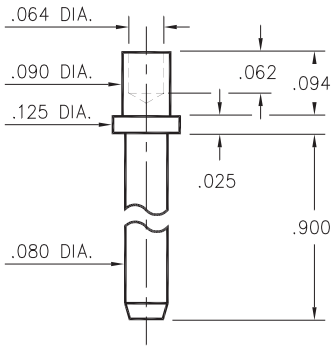


**3233-2-00-XX-00-00-08-0**
Swage mount in .094 hole.
For .062 thick board.

## 0520

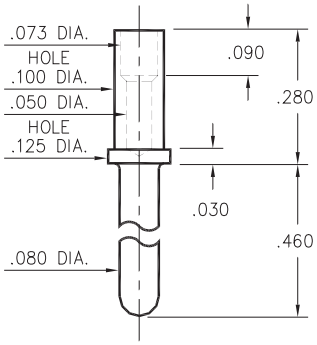


**0520-0-00-XX-00-00-03-0**
Annealed
#18 Gage crimp barrel

## SPECIFICATIONS

**PIN MATERIAL:**
Brass Alloy 360, 1/2 Hard
( Except Swage pins which are annealed )

**DIMENSION IN INCHES**
**TOLERANCES ON:**
LENGTHS: ±.005
DIAMETERS: ±.002
ANGLES: ± 2°

**ORDER CODE: XXXX - X - 0X - XX - 00 - 00 - XX - 0**

**BASIC PART #**

**SPECIFY PIN FINISH:**
**01** 200µ" TIN/LEAD OVER NICKEL
◇ **80** 200µ" TIN OVER NICKEL (RoHS)
◇ **15** 10µ" GOLD OVER NICKEL (RoHS)
◇ **21** 20µ" GOLD OVER NICKEL (RoHS)
◇ **34** 50µ" GOLD OVER NICKEL (RoHS)

RoHS 2002/95/EC

## 5231

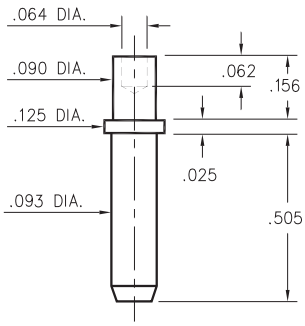


**5231-0-00-XX-00-00-38-0**
Swage mount in .094 hole.
For .125 thick board.

## 9092

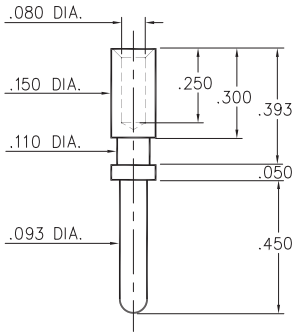


**9092-0-00-XX-00-00-38-0**
Wire Termination.

## 7310

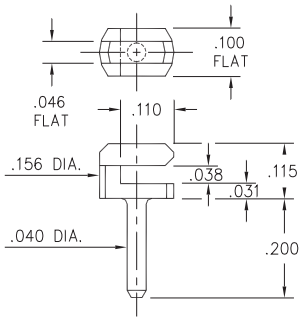


**7310-0-01-XX-00-00-08-0**
Board edge press-fit

## 7937

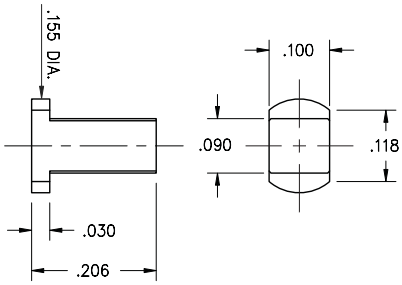


*P.C.B. Layout*

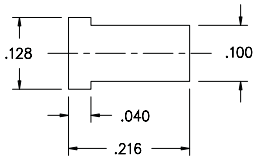


**7937-0-00-15-00-00-03-0**
Target Connector, Horizontal Surface mount
Also available on 16mm wide carrier tape: 2,400 parts per 13" reel.
Order as: 7937-0-58-15-00-00-03-0

## SPECIFICATIONS

**PIN MATERIAL:**
Brass Alloy 360, 1/2 Hard
( Except Swage pins which are annealed )

**DIMENSION IN INCHES**
**TOLERANCES ON:**
LENGTHS: ±.005
DIAMETERS: ±.002
ANGLES: ± 2°

**ORDER CODE: XXXX - X - 0X - XX - 00 - 00 - XX - 0**

**BASIC PART #**

**SPECIFY PIN FINISH:**
**01** 200µ" TIN/LEAD OVER NICKEL
◇ **80** 200µ" TIN OVER NICKEL (RoHS)
◇ **15** 10µ" GOLD OVER NICKEL (RoHS)
◇ **21** 20µ" GOLD OVER NICKEL (RoHS)
◇ **34** 50µ" GOLD OVER NICKEL (RoHS)

RoHS 2002/95/EC

## 5275

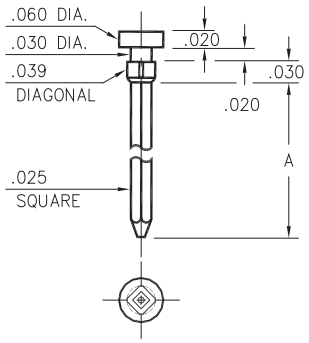


| Basic Part Number | # of Wraps | Wrapost Length A |
|---|---|---|
| 5275-1 | 1 | .370 |
| 5275-2 | 2 | .470 |
| 5275-3 | 3 | .610 |

**5275-X-05-XX-00-00-01-0**
Square press-fit in .035 plated thru hole

## 1010 ⇒ 1012/1020 ⇒ 1022

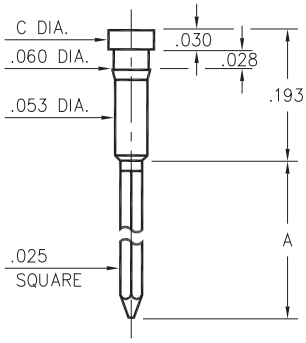


| Basic Part Number | # of Wraps | Wrapost Length A | Head Dia. C |
|---|---|---|---|
| 1012-1 | 1 | .260 | |
| 1011-2 | 2 | .360 | .072 |
| 1010-3 | 3 | .500 | |
| 1022-1 | 1 | .260 | |
| 1021-2 | 2 | .360 | .062 |
| 1020-3 | 3 | .500 | |

**10XX-X-05-XX-00-00-01-0**
Press-fit in .057 mounting hole

## 1215

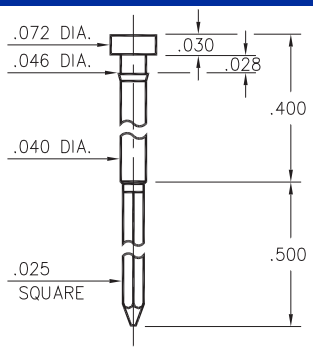


**1215-3-05-XX-00-00-01-0**
Press-fit in .043 mounting hole

## 1124

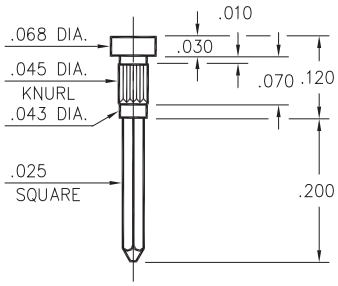


**1124-0-05-XX-00-00-01-0**
Press-fit in .043 mounting hole

## 1210

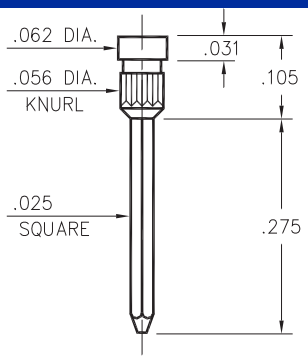


**1210-0-05-XX-00-00-01-0**
Press-fit in .053 mounting hole

## 1222

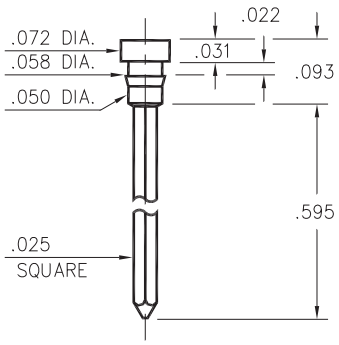


**1222-0-05-XX-00-00-01-0**
Press-fit in .055 mounting hole

## 1221

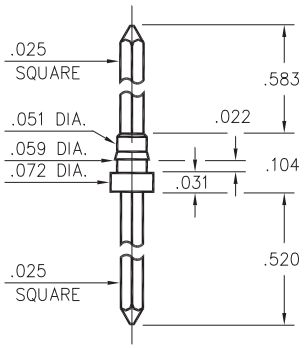


**1221-0-05-XX-00-00-01-0**
Press-fit in .056 mounting hole

## 1110

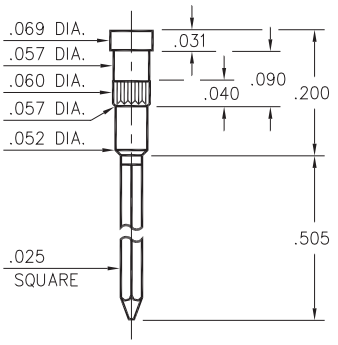


**1110-3-05-XX-00-00-01-0**
Press-fit in .057 mounting hole

## 1094

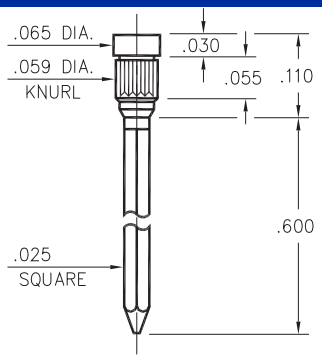


**1094-0-05-XX-00-00-01-0**
Press-fit in .056 mounting hole

## SPECIFICATIONS

**PIN MATERIAL:**
Brass Alloy 360, 1/2 Hard

**DIMENSION IN INCHES**
**TOLERANCES ON:**
LENGTHS: ±.005
DIAMETERS: ±.002
ANGLES: ± 2°

**ORDER CODE: XXXX - X - 05 - XX - 00 - 00 - 01 - 0**

**BASIC PART #**

**SPECIFY PIN FINISH:**
**01** 200µ" TIN/LEAD OVER NICKEL
◇ **80** 200µ" TIN OVER NICKEL (RoHS)
◇ **15** 10µ" GOLD OVER NICKEL (RoHS)
◇ **21** 20µ" GOLD OVER NICKEL (RoHS)

RoHS 2002/95/EC

## 1030 ⇒ 1032

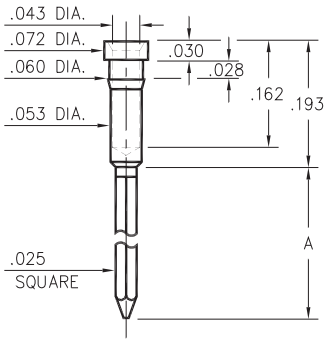


| Basic Part Number | # of Wraps | Wrapost Length A |
|---|---|---|
| 1032-1 | 1 | .260 |
| 1031-2 | 2 | .360 |
| 1030-3 | 3 | .500 |

**103X-X-05-XX-00-00-01-0**
Press-fit in .057 mounting hole

## 1216

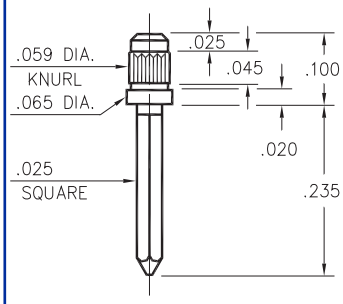


**1216-0-05-XX-00-00-01-0**
Press-fit in .056 mounting hole

## 1095

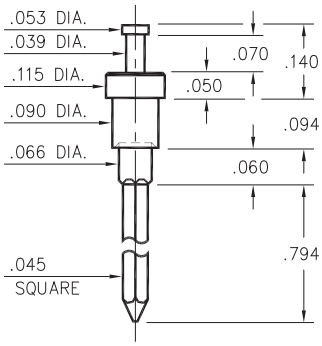


**1095-0-05-XX-00-00-01-0**
Swage mount in .094 hole
For .062 thick board

## 1214

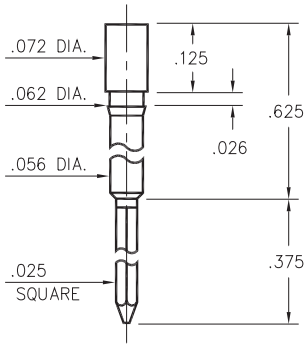


**1214-0-05-XX-00-00-01-0**
Press-fit in .059 mounting hole

## 1212

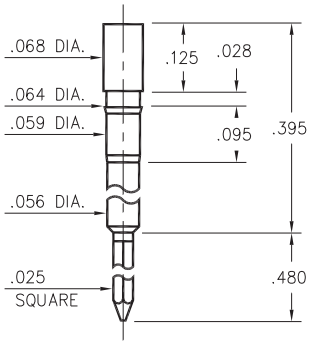


**1212-0-05-XX-00-00-01-0**
Press-fit in .061 mounting hole

## 1213

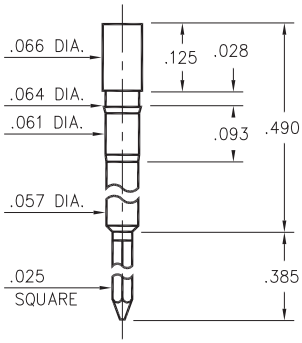


**1213-0-05-XX-00-00-01-0**
Press-fit in .061 mounting hole

## 0318

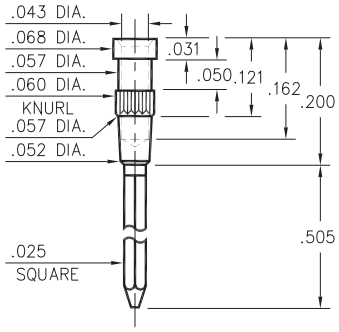


**0318-3-05-XX-00-00-01-0**
Press-fit in .057 mounting hole

## 1302

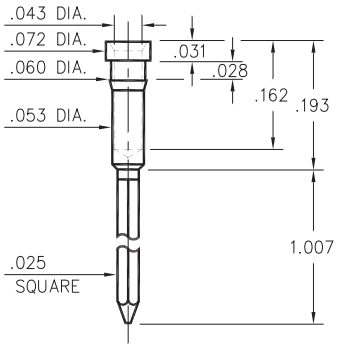


**1302-0-05-XX-00-00-01-0**
Press-fit in .057 mounting hole

## 1097

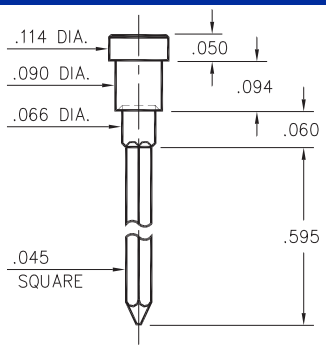


**1097-0-05-XX-00-00-01-0**
Swage mount in .094 hole
for .062 thick board

## SPECIFICATIONS

**PIN MATERIAL:**
Brass Alloy 360, 1/2 Hard
Swage pins are annealed

**DIMENSION IN INCHES**
**TOLERANCES ON:**
LENGTHS: ±.005
DIAMETERS: ±.002
ANGLES: ± 2°

**ORDER CODE: XXXX - X - 05 - XX - 00 - 00 - 01 - 0**

**BASIC PART #**

**SPECIFY PIN FINISH:**
**01** 200µ" TIN/LEAD OVER NICKEL
◇ **80** 200µ" TIN OVER NICKEL (RoHS)
◇ **15** 10µ" GOLD OVER NICKEL (RoHS)
◇ **21** 20µ" GOLD OVER NICKEL (RoHS)

RoHS 2002/95/EC

## 8301

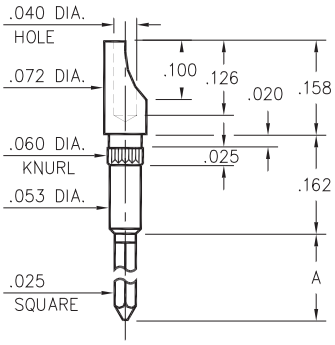


| Basic Part Number | # of Wraps | Wrapost Length A |
|---|---|---|
| 8301-2 | 2 | .370 |
| 8301-3 | 3 | .510 |

**8301-X-24-XX-00-00-01-0**
Press-fit in .057 mounting hole

## 1083

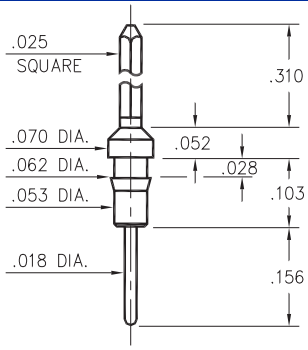


**1083-0-05-XX-00-00-01-0**
Press-fit in .059 mounting hole

## 5301

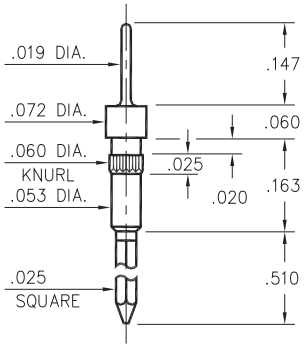


**5301-0-05-XX-00-00-01-0**
Press-fit in .057 mounting hole

## 1090

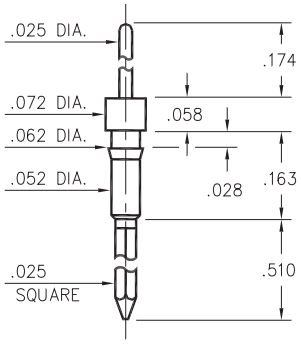


**1090-0-05-XX-00-00-01-0**
Press-fit in .059 mounting hole

## 8608

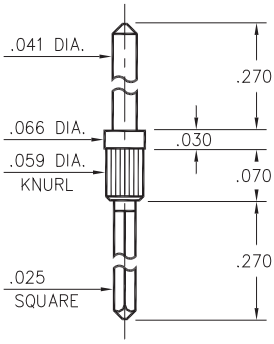


**8608-0-05-XX-00-00-01-0**
Press-fit in .056 mounting hole

## SPECIFICATIONS

**PIN MATERIAL:**
Brass Alloy 360, 1/2 Hard

**DIMENSION IN INCHES**
**TOLERANCES ON:**
LENGTHS: ±.005
DIAMETERS: ±.002
ANGLES: ± 2°

**ORDER CODE: XXXX - X - XX - XX - 00 - 00 - 01 - 0**

**BASIC PART #**

**SPECIFY PIN FINISH:**
**01** 200µ" TIN/LEAD OVER NICKEL
◇ **80** 200µ" TIN OVER NICKEL (RoHS)
◇ **15** 10µ" GOLD OVER NICKEL (RoHS)
◇ **21** 20µ" GOLD OVER NICKEL (RoHS)

RoHS 2002/95/EC

## 1096

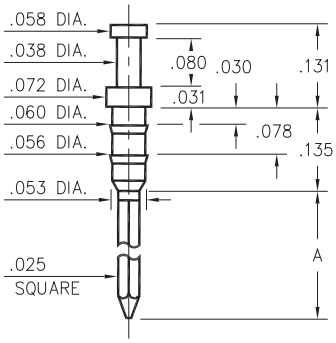


| Basic Part Number | # of Wraps | Wrapost Length A |
|---|---|---|
| 1096-2 | 2 | .381 |
| 1096-3 | 3 | .527 |

**1096-X-05-XX-00-00-01-0**
Press-fit in .057 mounting hole

## 1106

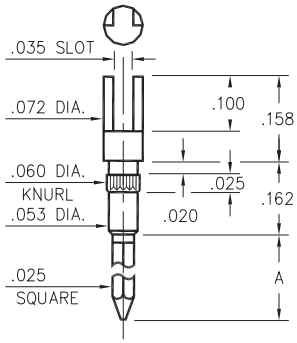


| Basic Part Number | # of Wraps | Wrapost Length A |
|---|---|---|
| 1106-2 | 2 | .370 |
| 1106-3 | 3 | .510 |

**1106-X-23-XX-00-00-01-0**
Press-fit in .057 mounting hole

## 1093

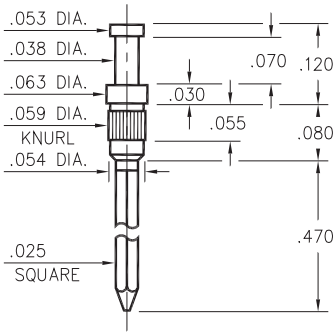


**1093-0-05-XX-00-00-01-0**
Press-fit in .056 mounting hole

## 0730

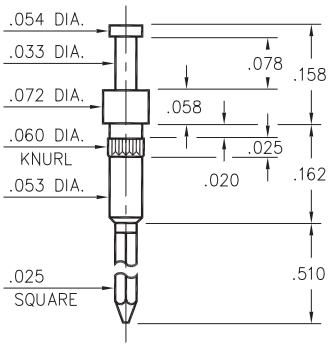


**0730-3-05-XX-00-00-01-0**
Press-fit in .057 mounting hole

## 1122

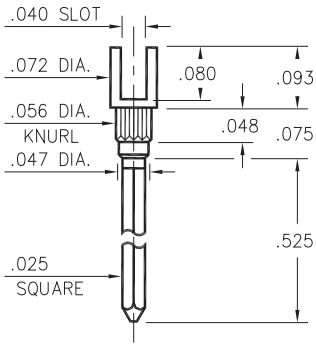


**1122-0-22-XX-00-00-01-0**
Press-fit in .053 mounting hole

## 1064

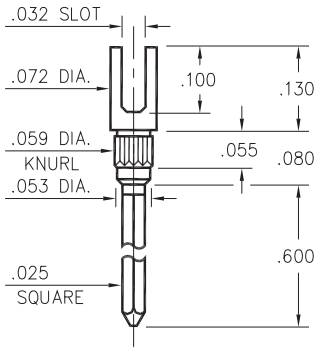


**1064-0-23-XX-00-00-01-0**
Press-fit in .056 mounting hole

## 1092

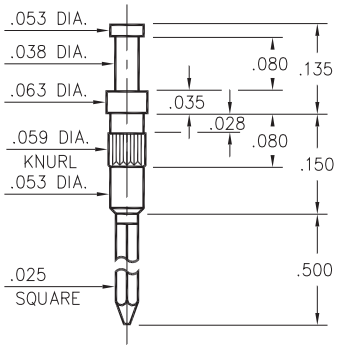


**1092-0-05-XX-00-00-01-0**
Press-fit in .056 mounting hole

## 1068

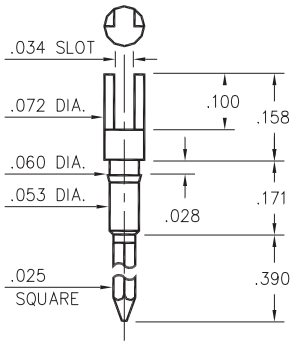


**1068-0-23-XX-00-00-01-0**
Press-fit in .057 mounting hole

## 1070 ⇒ 1072

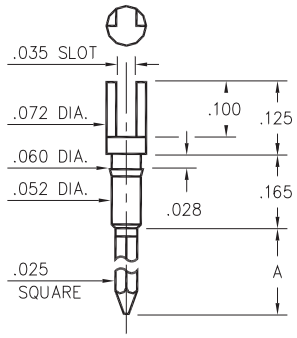


| Basic Part Number | # of Wraps | Wrapost Length A |
|---|---|---|
| 1072-1 | 1 | .260 |
| 1071-2 | 2 | .370 |
| 1070-3 | 3 | .510 |

**107X-X-23-XX-00-00-01-0**
Press-fit in .057 mounting hole

## SPECIFICATIONS

**PIN MATERIAL:**
Brass Alloy 360, 1/2 Hard

**DIMENSION IN INCHES**
**TOLERANCES ON:**
LENGTHS: ±.005
DIAMETERS: ±.002
ANGLES: ± 2°

**ORDER CODE: XXXX - X - XX - XX - 00 - 00 - 01 - 0**

**BASIC PART #**

**SPECIFY PIN FINISH:**
**01** 200µ" TIN/LEAD OVER NICKEL
◇ **80** 200µ" TIN OVER NICKEL (RoHS)
◇ **15** 10µ" GOLD OVER NICKEL (RoHS)
◇ **21** 20µ" GOLD OVER NICKEL (RoHS)

RoHS 2002/95/EC

## 2111

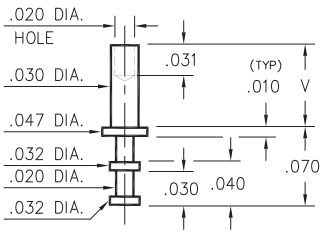


| - X - | Board Thick-ness | Length V |
|---|---|---|
| 1 | .031 | .053 |
| 2 | .062 | .084 |
| 3 | .094 | .115 |

**2111-X-00-XX-00-00-07-0**
Swage mount in .033 hole

## 2113

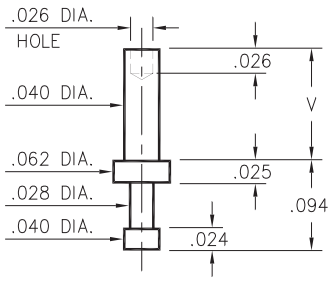


| - X - | Board Thick-ness | Length V |
|---|---|---|
| 1 | .031 | .053 |
| 2 | .062 | .084 |
| 3 | .094 | .115 |
| 4 | .125 | .147 |

**2113-X-00-XX-00-00-07-0**
Swage mount in .043 hole

## 2108

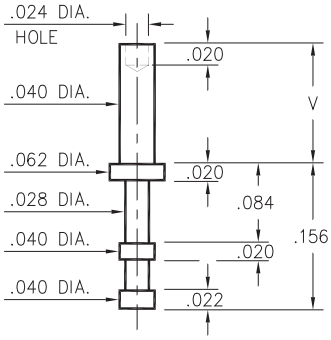


| - X - | Board Thick-ness | Length V |
|---|---|---|
| 1 | .031 | .053 |
| 2 | .062 | .084 |
| 3 | .094 | .115 |
| 4 | .125 | .147 |

**2108-X-00-XX-00-00-07-0**
Swage mount in .043 hole

## 2102

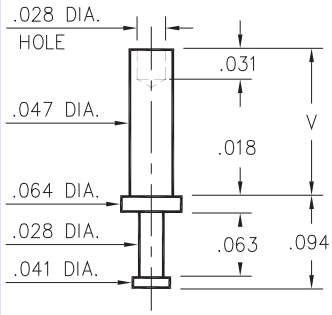


| - X - | Board Thick-ness | Length V |
|---|---|---|
| 5 | .016 | .035 |
| 1 | .031 | .054 |
| 2 | .062 | .084 |
| 3 | .094 | .115 |
| 4 | .125 | .147 |

**2102-X-00-XX-00-00-07-0**
Swage mount in .052 hole

## 2109

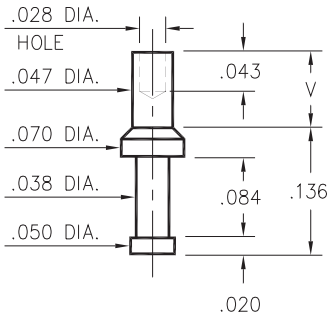


| - X - | Board Thick-ness | Length V |
|---|---|---|
| 1 | .031 | .052 |
| 2 | .062 | .085 |

**2109-X-00-XX-00-00-07-0**
Swage mount in .052 hole

## 2324

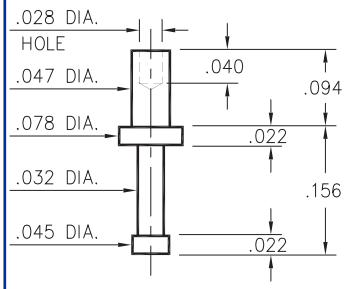


**2324-2-00-XX-00-00-07-0**
Swage mount in .052 hole
for .062 thick board

## SPECIFICATIONS

**PIN MATERIAL:**
Brass Alloy 360, 1/2 Hard
Swage pins are annealed

**DIMENSION IN INCHES**
**TOLERANCES ON:**
LENGTHS: ±.005
DIAMETERS: ±.002
ANGLES: ± 2°

**ORDER CODE: XXXX - X - 00 - XX - 00 - 00 - 07 - 0**

**BASIC PART #**

**SPECIFY PIN FINISH:**
**01** 200µ" TIN/LEAD OVER NICKEL
◇ **80** 200µ" TIN OVER NICKEL (RoHS)
◇ **44** 300µ" SILVER OVER COPPER (RoHS)
◇ **50** 300µ" ELECTRO-SOLDER (RoHS) (60/40 SnPb)

RoHS 2002/95/EC

## 2312

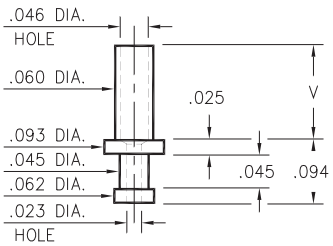


| - X - | Board Thick-ness | Length V |
|---|---|---|
| 1 | .031 | .053 |
| 2 | .062 | .094 |
| 3 | .094 | .115 |
| 4 | .125 | .147 |

**2312-X-00-XX-00-00-07-0**
Swage mount in .064 hole

## 2308

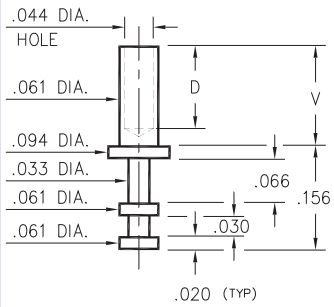


| - X - | Board Thick-ness | Length V | Depth D |
|---|---|---|---|
| 1 | .031 | .054 | .036 |
| 2 | .062 | .084 | .066 |
| 3 | .094 | .115 | .096 |
| 4 | .125 | .147 | .126 |

**2308-X-00-XX-00-00-07-0**
Swage in .064 mount hole

## 2707

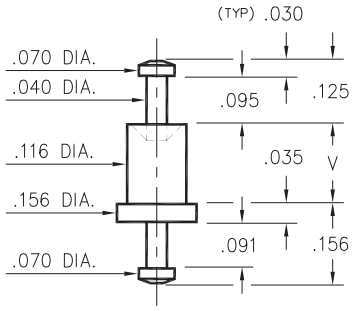


| - X - | Board Thick-ness | Length V |
|---|---|---|
| 1 | .031 | .062 |
| 2 | .062 | .094 |
| 3 | .094 | .125 |
| 4 | .125 | .156 |

**2707-X-00-XX-00-00-07-0**
Swage mount in .120 hole

## 2329

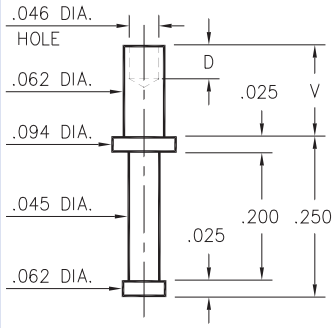


| - X - | Board Thick-ness | Length V | Depth D |
|---|---|---|---|
| 1 | .031 | .045 | .045 |
| 2 | .062 | .094 | |
| 3 | .094 | .125 | .062 |
| 4 | .125 | .156 | |

**2329-X-00-XX-00-00-07-0**
Swage mount in .067 hole

## 2510/2513

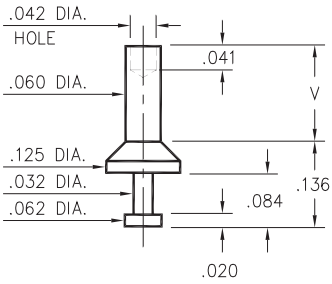


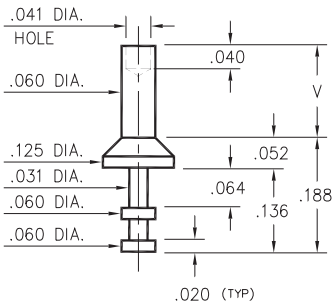


| - X - | Board Thick-ness | Length V |
|---|---|---|
| 1 | .031 | .062 |
| 2 | .062 | .094 |
| 3 | .094 | .125 |
| 4 | .125 | .156 |

**2510-X-00-XX-00-00-07-0**
Swage mount in .064 hole

**2513-X-00-XX-00-00-07-0**
Swage mount in .064 hole

## SPECIFICATIONS

**PIN MATERIAL:**
Brass Alloy 360, 1/2 Hard
Swage pins are annealed

**DIMENSION IN INCHES**
**TOLERANCES ON:**
LENGTHS: ±.005
DIAMETERS: ±.002
ANGLES: ± 2°

**ORDER CODE: XXXX - X - 00 - XX - 00 - 00 - 07 - 0**

**BASIC PART #**

**SPECIFY PIN FINISH:**
**01** 200µ" TIN/LEAD OVER NICKEL
◇ **80** 200µ" TIN OVER NICKEL (RoHS)
◇ **44** 300µ" SILVER OVER COPPER (RoHS)
◇ **50** 300µ" ELECTRO-SOLDER (RoHS) (60/40 SnPb)

RoHS 2002/95/EC

## 2110

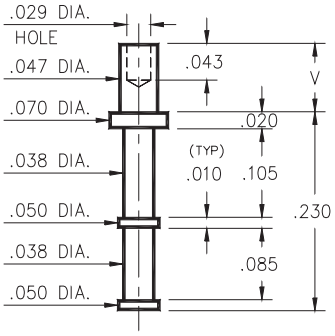


| - X - | Board Thick-ness | Length V |
|---|---|---|
| 1 | .031 | .049 |
| 2 | .062 | .082 |

**2110-X-00-XX-00-00-07-0**
Swage mount in .052 hole

## 2333

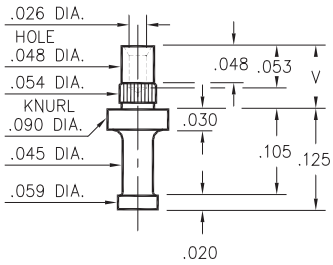


| - X - | Board Thick-ness | Length V |
|---|---|---|
| 1 | .078 | .103 |
| 2 | .062 | .087 |
| 3 | .047 | .072 |

**2333-X-00-XX-00-00-07-0**
Press-fit and swage in .052 mounting hole

## 2821

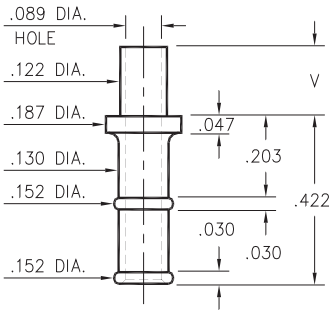


| - X - | Board Thick-ness | Length V |
|---|---|---|
| 2 | .062 | .109 |
| 3 | .094 | .141 |
| 4 | .125 | .172 |

**2821-X-00-XX-00-00-07-0**
Swage mount in .125 hole

## 2533

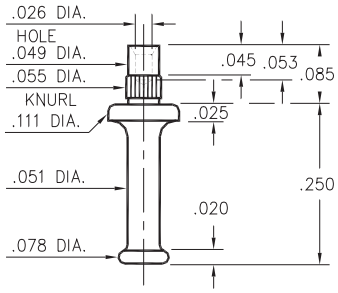


**2533-0-00-XX-00-00-07-0**
Press-fit & swage in .052 mtg. hole. For .062 thick board

## 2101

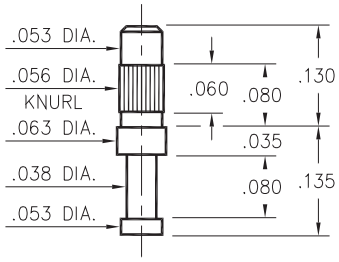


**2101-3-00-XX-00-00-07-0**
Press-fit in .053 mtg. hole. For .062 to .094 thick board

## 2316/2317/2708

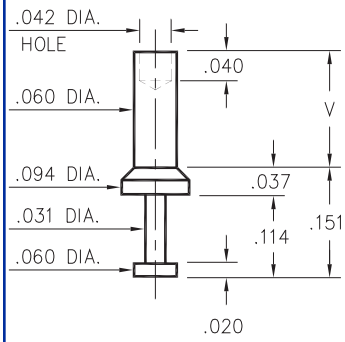


**2316-X-00-XX-00-00-07-0**
Swage mount in .064 hole

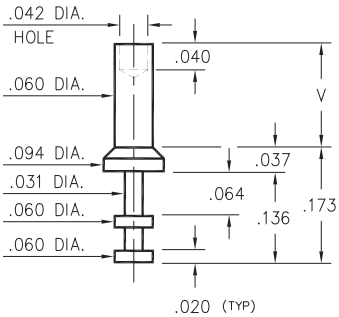


**2317-X-00-XX-00-00-07-0**
Swage mount in .064 hole

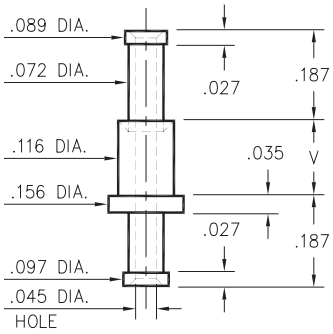


**2708-X-00-XX-00-00-07-0**
Swage mount in .120 hole

| - X - | Board Thick-ness | Length V |
|---|---|---|
| 1 | .031 | .062 |
| 2 | .062 | .094 |
| 3 | .094 | .125 |
| 4 | .125 | .156 |

## SPECIFICATIONS

**PIN MATERIAL:**
Brass Alloy 360, 1/2 Hard
Swage pins are annealed

**DIMENSION IN INCHES**
**TOLERANCES ON:**
LENGTHS: ±.005
DIAMETERS: ±.002
ANGLES: ± 2°

**ORDER CODE: XXXX - X - 00 - XX - 00 - 00 - 07 - 0**

**BASIC PART #**

**SPECIFY PIN FINISH:**
**01** 200µ" TIN/LEAD OVER NICKEL
◇ **80** 200µ" TIN OVER NICKEL (RoHS)
◇ **44** 300µ" SILVER OVER COPPER (RoHS)
◇ **50** 300µ" ELECTRO-SOLDER (RoHS) (60/40 SnPb)

RoHS 2002/95/EC

## 2348/2301/2506

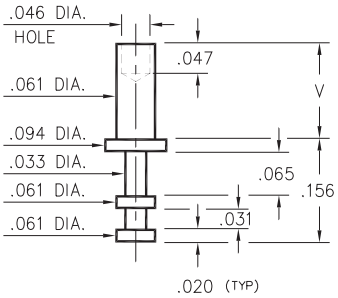


**2348-X-00-XX-00-00-07-0**
Swage mount in .064 hole

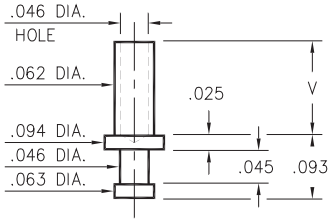


**2301-X-00-XX-00-00-07-0**
Swage mount in .067 hole

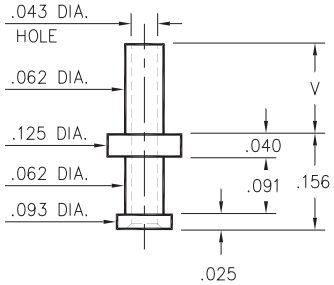


**2506-X-00-XX-00-00-07-0**
Swage mount in .067 hole

| - X - | Board Thick-ness | Length V |
|---|---|---|
| 1 | .031 | .053 |
| 2 | .062 | .084 |
| 3 | .094 | .115 |
| 4 | .125 | .147 |

## 2310

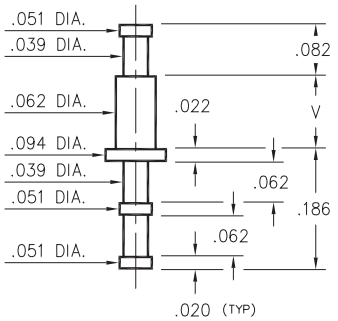


**2310-X-00-XX-00-00-07-0**
Swage mount in .067 hole

| - X - | Board Thick-ness | Length V |
|---|---|---|
| 1 | .031 | .053 |
| 2 | .062 | .082 |
| 3 | .094 | .113 |
| 4 | .125 | .145 |

## 2505

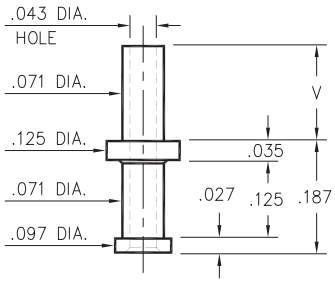


**2505-X-00-XX-00-00-07-0**
Swage mount in .076 hole

| - X - | Board Thick-ness | Length V |
|---|---|---|
| 1 | .031 | .062 |
| 2 | .062 | .093 |
| 3 | .094 | .125 |
| 4 | .125 | .156 |

## 2325/2355/2365

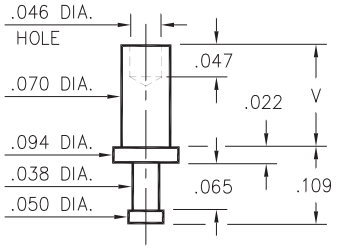


**2325-X-00-XX-00-00-07-0**
Swage mount in .073 hole

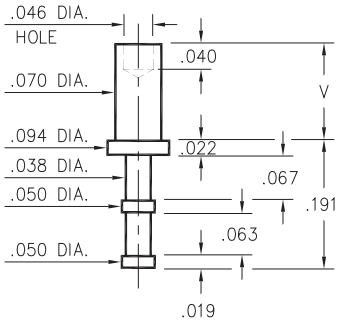


**2355-X-00-XX-00-00-07-0**
Swage mount in .073 hole

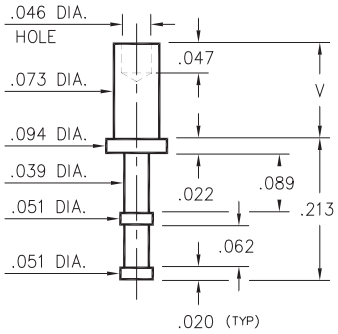


**2365-X-00-XX-00-00-07-0**
Swage mount in .076 hole

| - X - | Board Thick-ness | Length V |
|---|---|---|
| 1 | .031 | .053 |
| 2 | .062 | .084 |
| 3 | .094 | .115 |
| 4 | .125 | .147 |

## SPECIFICATIONS

**PIN MATERIAL:**
Brass Alloy 360, 1/2 Hard
Swage pins are annealed

**DIMENSION IN INCHES**
**TOLERANCES ON:**
LENGTHS: ±.005
DIAMETERS: ±.002
ANGLES: ± 2°

**ORDER CODE: XXXX - X - 00 - XX - 00 - 00 - 07 - 0**

**BASIC PART #**

**SPECIFY PIN FINISH:**
**01** 200µ" TIN/LEAD OVER NICKEL
◇ **80** 200µ" TIN OVER NICKEL (RoHS)
◇ **44** 300µ" SILVER OVER COPPER (RoHS)
◇ **50** 300µ" ELECTRO-SOLDER (RoHS) (60/40 SnPb)

RoHS 2002/95/EC

## 2304/2305

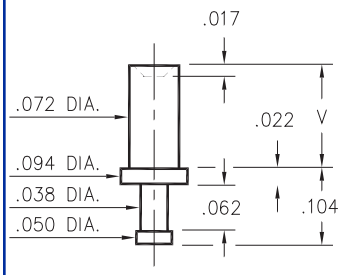


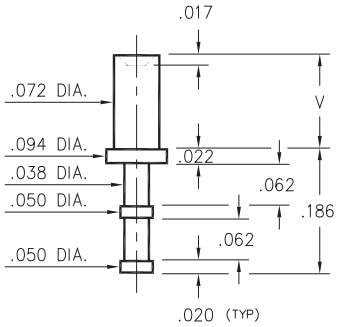


| - X - | Board Thick-ness | Length V |
|---|---|---|
| 1 | .031 | .051 |
| 2 | .062 | .082 |
| 3 | .094 | .113 |
| 4 | .125 | .145 |

**2304-X-00-XX-00-00-07-0**
Swage mount in .076 hole

**2305-X-00-XX-00-00-07-0**
Swage mount in .076 hole

## 2503

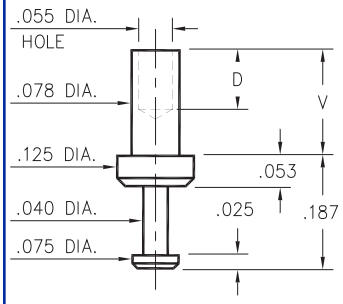


| - X - | Board Thick-ness | Length V | Depth D |
|---|---|---|---|
| 1 | .031 | .078 | .068 |
| 2 | .062 | .109 | |
| 3 | .094 | .141 | .098 |
| 4 | .125 | .172 | |

**2503-X-00-XX-00-00-07-0**
Swage mount in .082 hole

## 2704

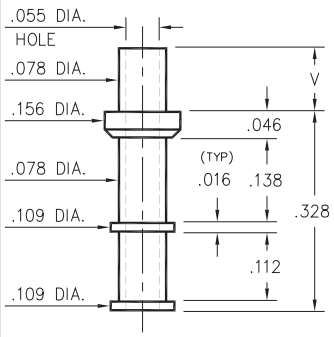


| - X - | Board Thick-ness | Length V |
|---|---|---|
| 1 | .031 | .075 |
| 2 | .062 | .105 |
| 3 | .094 | .135 |
| 4 | .125 | .165 |

**2704-X-00-XX-00-00-07-0**
Swage mount in .082 hole

## 2306/2307/2311

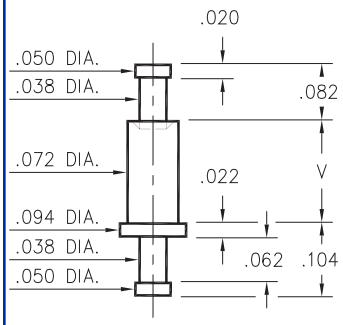


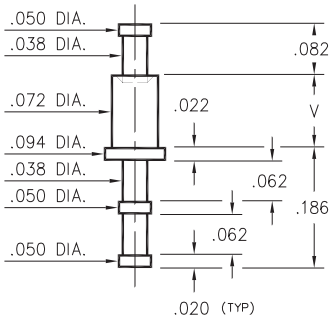


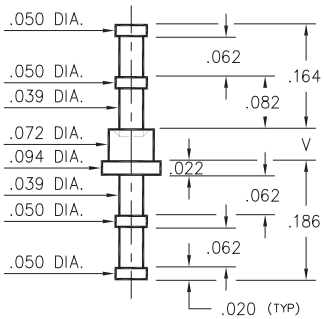


| - X - | Board Thick-ness | Length V |
|---|---|---|
| 1 | .031 | .051 |
| 2 | .062 | .082 |
| 3 | .094 | .113 |
| 4 | .125 | .145 |

**2306-X-00-XX-00-00-07-0**
Swage mount in .076 hole

**2307-X-00-XX-00-00-07-0**
Swage mount in .076 hole

**2311-X-00-XX-00-00-07-0**
Swage mount in .076 hole

## SPECIFICATIONS

**PIN MATERIAL:**
Brass Alloy 360, 1/2 Hard
Swage pins are annealed

**DIMENSION IN INCHES**
**TOLERANCES ON:**
LENGTHS: ±.005
DIAMETERS: ±.002
ANGLES: ± 2°

**ORDER CODE: XXXX - X - 00 - XX - 00 - 00 - 07 - 0**

**BASIC PART #**

**SPECIFY PIN FINISH:**
**01** 200µ" TIN/LEAD OVER NICKEL
◇ **80** 200µ" TIN OVER NICKEL (RoHS)
◇ **44** 300µ" SILVER OVER COPPER (RoHS)
◇ **50** 300µ" ELECTRO-SOLDER (RoHS) (60/40 SnPb)

RoHS 2002/95/EC

## 2810

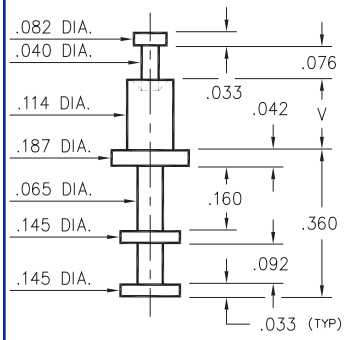


| - X - | Board Thickness | Length V |
|---|---|---|
| 2 | .062 | .105 |
| 3 | .094 | .135 |
| 4 | .125 | .165 |

**2810-X-00-XX-00-00-07-0**
Swage mount in .118 hole

## 2524

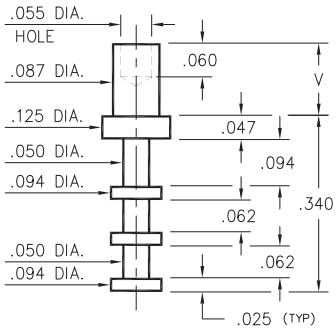


| - X - | Board Thickness | Length V |
|---|---|---|
| 1 | .031 | .075 |
| 2 | .062 | .105 |
| 3 | .094 | .135 |
| 4 | .125 | .165 |

**2524-X-00-XX-00-00-07-0**
Swage mount in .092 hole

## 2561/2508

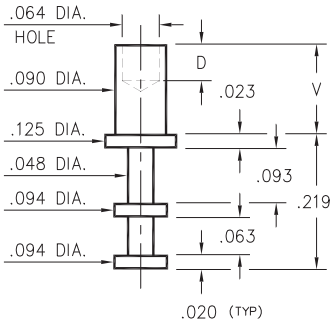


**2561-X-00-XX-00-00-07-0**
Swage mount in .094 hole

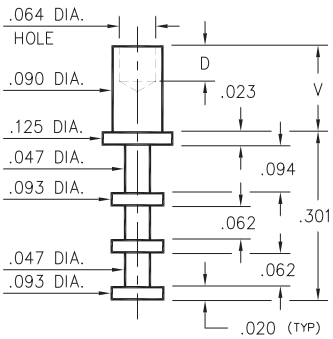


**2508-X-00-XX-00-00-07-0**
Swage mount in .094 hole

| - X - | Board Thickness | Length V | Depth D |
|---|---|---|---|
| 1 | .031 | .063 | .047 |
| 2 | .062 | .094 | |
| 3 | .094 | .125 | .062 |
| 4 | .125 | .156 | |

## 2551

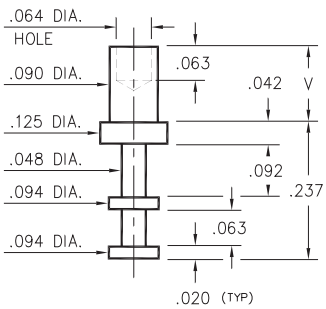


| - X - | Board Thickness | Length V |
|---|---|---|
| 1 | .031 | .075 |
| 2 | .062 | .105 |
| 3 | .094 | .135 |
| 4 | .125 | .165 |

**2551-X-00-XX-00-00-07-0**
Swage mount in .094 hole

## 2812

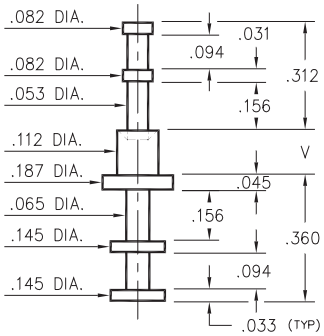


| - X - | Board Thickness | Length V |
|---|---|---|
| 1 | .062 | .105 |
| 2 | .094 | .135 |
| 3 | .125 | .165 |
| 4 | .188 | .230 |

**2812-X-00-XX-00-00-07-0**
Swage mount in .116 hole

## SPECIFICATIONS

**PIN MATERIAL:**
Brass Alloy 360, 1/2 Hard
Swage pins are annealed

**DIMENSION IN INCHES**
**TOLERANCES ON:**
LENGTHS: ±.005
DIAMETERS: ±.002
ANGLES: ± 2°

**ORDER CODE: XXXX - X - 00 - XX - 00 - 00 - 07 - 0**

**BASIC PART #**

**SPECIFY PIN FINISH:**
**01** 200µ" TIN/LEAD OVER NICKEL
◇ **80** 200µ" TIN OVER NICKEL (RoHS)
◇ **44** 300µ" SILVER OVER COPPER (RoHS)
◇ **50** 300µ" ELECTRO-SOLDER (RoHS) (60/40 SnPb)

RoHS 2002/95/EC

## 2501

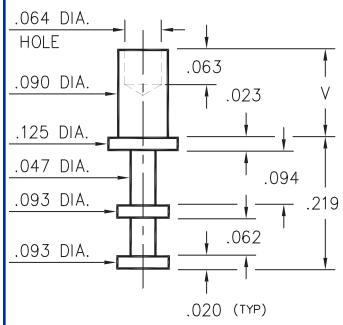


| - X - | Board Thick-ness | Length V |
|---|---|---|
| 1 | .031 | .078 |
| 2 | .062 | .109 |
| 3 | .094 | .140 |
| 4 | .125 | .171 |

**2501-X-00-XX-00-00-07-0**
Swage mount in .094 hole

## 2703

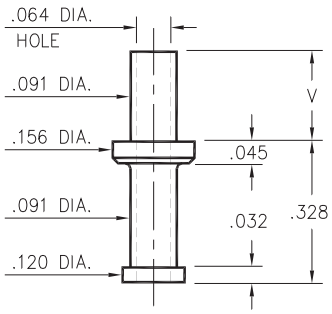


| - X - | Board Thick-ness | Length V |
|---|---|---|
| 1 | .031 | .077 |
| 2 | .062 | .107 |
| 3 | .094 | .137 |
| 4 | .125 | .167 |

**2703-X-00-XX-00-00-07-0**
Swage mount in .094 hole

## 2702

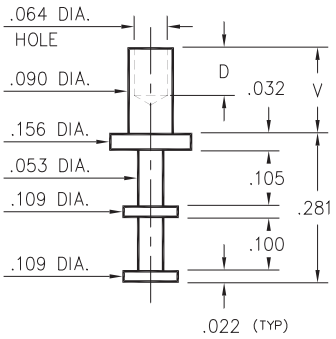


| - X - | Board Thick-ness | Length V | Depth D |
|---|---|---|---|
| 1 | .031 | .075 | .063 |
| 2 | .062 | .105 | |
| 3 | .094 | .135 | .093 |
| 4 | .125 | .165 | |

**2702-X-00-XX-00-00-07-0**
Swage mount in .094 hole

## 2710

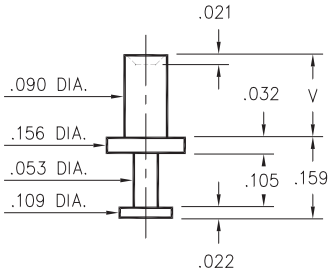


| - X - | Board Thick-ness | Length V |
|---|---|---|
| 1 | .031 | .062 |
| 2 | .062 | .094 |
| 3 | .094 | .125 |
| 4 | .125 | .156 |

**2710-X-00-XX-00-00-07-0**
Swage mount in .094 hole

## 2717/2713

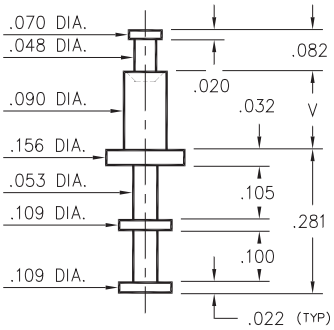


**2717-X-00-XX-00-00-07-0**
Swage mount in .094 hole

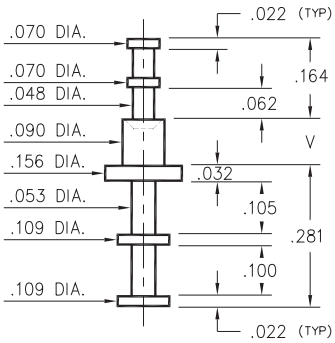


**2713-X-00-XX-00-00-07-0**
Swage mount in .094 hole

| - X - | Board Thick-ness | Length V |
|---|---|---|
| 1 | .031 | .062 |
| 2 | .062 | .094 |
| 3 | .094 | .125 |
| 4 | .125 | .156 |

## SPECIFICATIONS

**PIN MATERIAL:**
Brass Alloy 360, 1/2 Hard
Swage pins are annealed

**DIMENSION IN INCHES**
**TOLERANCES ON:**
LENGTHS: ±.005
DIAMETERS: ±.002
ANGLES: ± 2°

**ORDER CODE: XXXX - X - 00 - XX - 00 - 00 - 07 - 0**

**BASIC PART #**

**SPECIFY PIN FINISH:**
**01** 200µ" TIN/LEAD OVER NICKEL
◇ **80** 200µ" TIN OVER NICKEL (RoHS)
◇ **44** 300µ" SILVER OVER COPPER (RoHS)
◇ **50** 300µ" ELECTRO-SOLDER (RoHS) (60/40 SnPb)

RoHS 2002/95/EC

## 2512

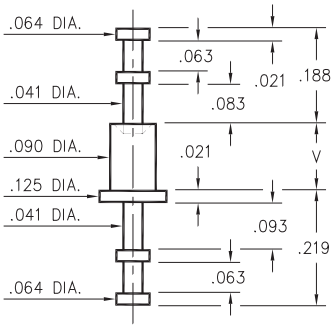


| - X - | Board Thick-ness | Length V |
|---|---|---|
| 1 | .031 | .062 |
| 2 | .062 | .094 |
| 3 | .094 | .125 |
| 4 | .125 | .156 |

**2512-X-00-XX-00-00-07-0**
Swage mount in .094 hole

## 2705

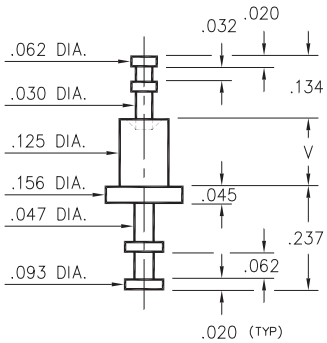


| - X - | Board Thick-ness | Length V |
|---|---|---|
| 1 | .031 | .075 |
| 2 | .062 | .105 |
| 3 | .094 | .135 |
| 4 | .125 | .165 |

**2705-X-00-XX-00-00-07-0**
Swage mount in .129 hole

## 2803

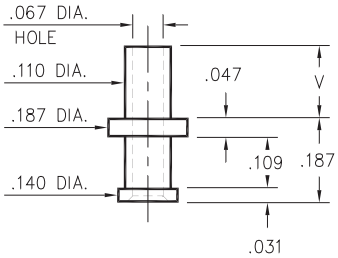


| - X - | Board Thick-ness | Length V |
|---|---|---|
| 1 | .031 | .078 |
| 2 | .062 | .109 |
| 3 | .094 | .140 |
| 4 | .125 | .171 |

**2803-X-00-XX-00-00-07-0**
Swage mount in .113 hole

## 2815

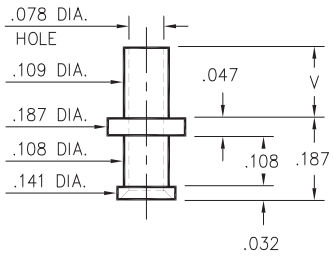


| - X - | Board Thick-ness | Length V |
|---|---|---|
| 1 | .031 | .075 |
| 2 | .062 | .105 |
| 3 | .094 | .135 |
| 4 | .125 | .165 |

**2815-X-00-XX-00-00-07-0**
Swage mount in .113 hole

## 2816

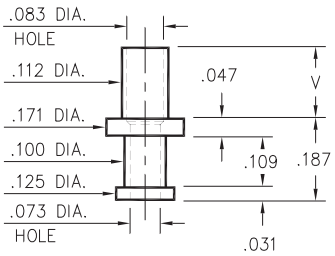


| - X - | Board Thick-ness | Length V |
|---|---|---|
| 1 | .031 | .078 |
| 2 | .062 | .109 |
| 3 | .094 | .141 |
| 4 | .125 | .172 |

**2816-X-00-XX-00-00-07-0**
Swage mount in .116 hole

## 2817

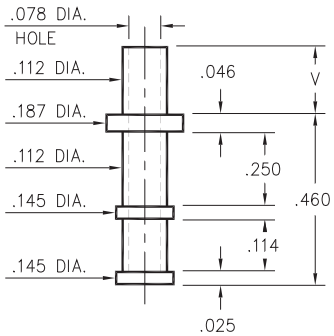


| - X - | Board Thick-ness | Length V |
|---|---|---|
| 1 | .031 | .075 |
| 2 | .062 | .105 |
| 3 | .094 | .135 |
| 4 | .125 | .165 |

**2817-X-00-XX-00-00-07-0**
Swage mount in .116 hole

## SPECIFICATIONS

**PIN MATERIAL:**
Brass Alloy 360, 1/2 Hard
Swage pins are annealed

**DIMENSION IN INCHES**
**TOLERANCES ON:**
LENGTHS: ±.005
DIAMETERS: ±.002
ANGLES: ± 2°

**ORDER CODE: XXXX - X - 00 - XX - 00 - 00 - 07 - 0**

**BASIC PART #**

**SPECIFY PIN FINISH:**
**01** 200µ" TIN/LEAD OVER NICKEL
◇ **80** 200µ" TIN OVER NICKEL (RoHS)
◇ **44** 300µ" SILVER OVER COPPER (RoHS)
◇ **50** 300µ" ELECTRO-SOLDER (RoHS) (60/40 SnPb)

RoHS 2002/95/EC

## 2802/2804

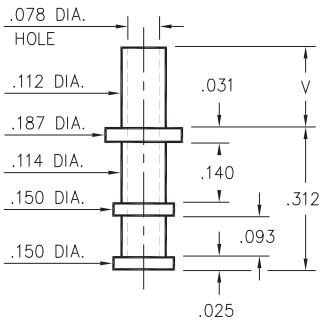


**2802-X-00-XX-00-00-07-0**
Swage mount in .118 hole

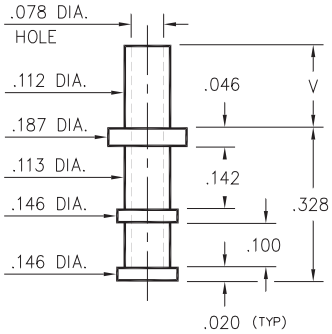


**2804-X-00-XX-00-00-07-0**
Swage mount in .118 hole

| - X - | Board Thick-ness | Length V |
|---|---|---|
| 1 | .031 | .078 |
| 2 | .062 | .109 |
| 3 | .094 | .140 |
| 4 | .125 | .171 |

## 2805

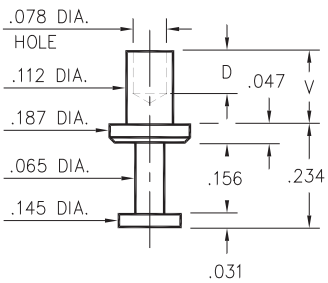


**2805-X-00-XX-00-00-07-0**
Swage mount in .116 hole

| - X - | Board Thick-ness | Length V | Depth D |
|---|---|---|---|
| 1 | .031 | .074 | .068 |
| 2 | .062 | .105 | |
| 3 | .094 | .135 | .098 |
| 4 | .125 | .165 | |

## 2801

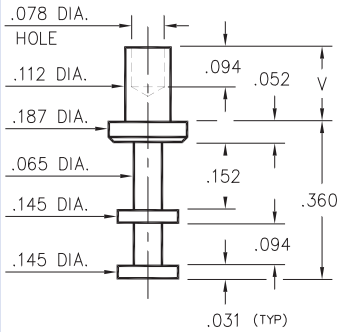


**2801-X-00-XX-00-00-07-0**
Swage mount in .116 hole

| - X - | Board Thick-ness | Length V |
|---|---|---|
| 1 | .031 | .078 |
| 2 | .062 | .109 |
| 3 | .094 | .141 |
| 4 | .125 | .172 |
| 5 | .188 | .234 |

## 2806

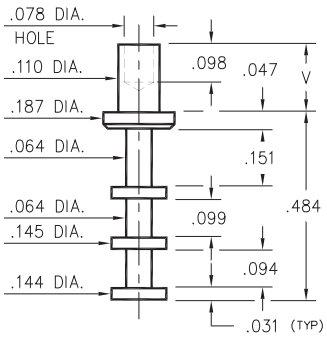


**2806-X-00-XX-00-00-07-0**
Swage mount in .116 hole

| - X - | Board Thick-ness | Length V |
|---|---|---|
| 1 | .031 | .078 |
| 2 | .062 | .109 |
| 3 | .094 | .141 |
| 4 | .125 | .172 |

## 2811

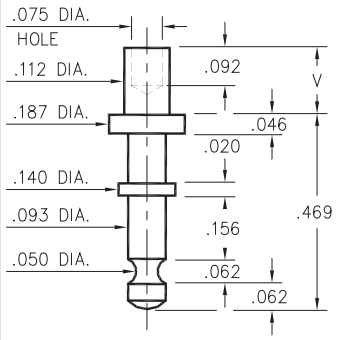


**2811-X-00-XX-00-00-07-0**
Swage mount in .116 hole

| - X - | Board Thick-ness | Length V |
|---|---|---|
| 1 | .031 | .075 |
| 2 | .062 | .105 |
| 3 | .094 | .135 |
| 4 | .125 | .165 |

## SPECIFICATIONS

**PIN MATERIAL:**
Brass Alloy 360, 1/2 Hard
Swage pins are annealed

**DIMENSION IN INCHES**
**TOLERANCES ON:**
LENGTHS: ±.005
DIAMETERS: ±.002
ANGLES: ± 2°

**ORDER CODE: XXXX - X - 00 - XX - 00 - 00 - 07 - 0**

**BASIC PART #**

**SPECIFY PIN FINISH:**
**01** 200µ" TIN/LEAD OVER NICKEL
◇ **80** 200µ" TIN OVER NICKEL (RoHS)
◇ **44** 300µ" SILVER OVER COPPER (RoHS)
◇ **50** 300µ" ELECTRO-SOLDER (RoHS) (60/40 SnPb)

RoHS 2002/95/EC

## 2104

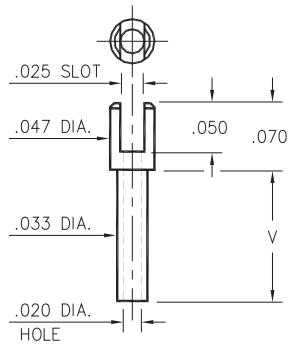


| - X - | Board Thick-ness | Length V |
|---|---|---|
| 1 | .031 | .055 |
| 2 | .062 | .086 |
| 3 | .094 | .117 |
| 4 | .125 | .148 |

**2104-X-01-XX-00-00-07-0**
Swage mount in .036 hole

## 2112

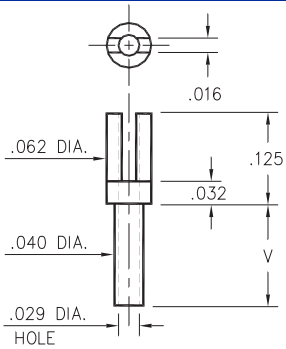


| - X - | Board Thick-ness | Length V |
|---|---|---|
| 5 | .016 | .037 |
| 1 | .031 | .053 |
| 2 | .062 | .084 |
| 3 | .094 | .115 |
| 4 | .125 | .147 |

**2112-X-01-XX-00-00-07-0**
Swage mount in .043 hole

## 2105

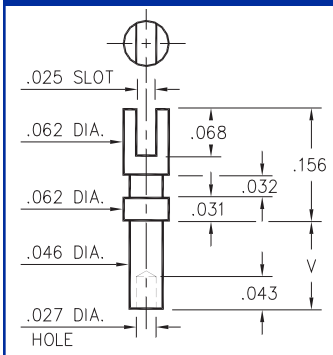


| - X - | Board Thick-ness | Length V |
|---|---|---|
| 1 | .031 | .055 |
| 2 | .062 | .086 |
| 3 | .094 | .117 |
| 4 | .125 | .149 |

**2105-X-01-XX-00-00-07-0**
Swage mount in .052 hole

## 2103

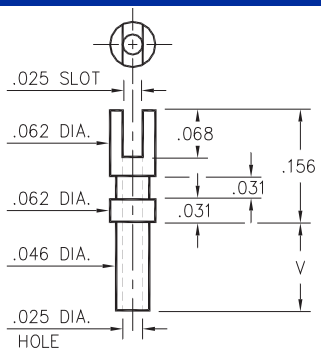


| - X - | Board Thick-ness | Length V |
|---|---|---|
| 1 | .031 | .058 |
| 2 | .062 | .089 |
| 3 | .094 | .120 |
| 4 | .125 | .150 |

**2103-X-01-XX-00-00-07-0**
Swage mount in .052 hole

## 2106/2107

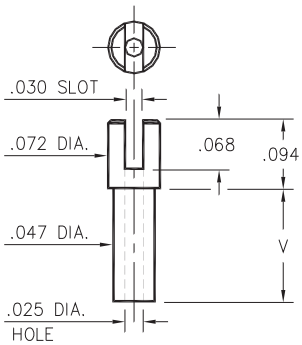


**2106-X-01-XX-00-00-07-0**
Swage mount in .052 hole

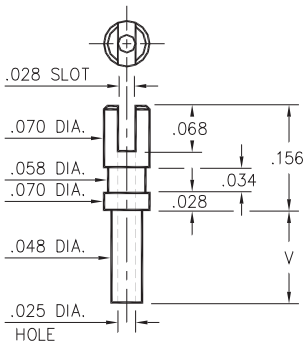


**2107-X-01-XX-00-00-07-0**
Swage mount in .052 hole

| - X - | Board Thick-ness | Length V |
|---|---|---|
| 1 | .031 | .051 |
| 2 | .062 | .082 |
| 3 | .094 | .113 |
| 4 | .125 | .145 |

## SPECIFICATIONS

**PIN MATERIAL:**
Brass Alloy 360, 1/2 Hard
Swage pins are annealed

**DIMENSION IN INCHES**
**TOLERANCES ON:**
LENGTHS: ±.005
DIAMETERS: ±.002
ANGLES: ± 2°

**ORDER CODE: XXXX - X - 01 - XX - 00 - 00 - 07 - 0**

**BASIC PART #**

**SPECIFY PIN FINISH:**
**01** 200µ" TIN/LEAD OVER NICKEL
◇ **80** 200µ" TIN OVER NICKEL (RoHS)
◇ **44** 300µ" SILVER OVER COPPER (RoHS)
◇ **50** 300µ" ELECTRO-SOLDER (RoHS) (60/40 SnPb)

RoHS 2002/95/EC

## 2303/2323/2322

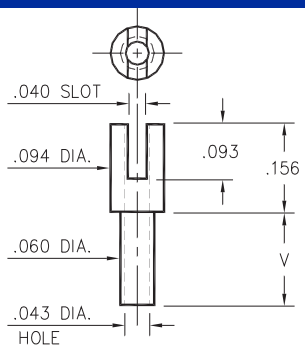


**2303-X-01-XX-00-00-07-0**
Swage mount in .064 hole

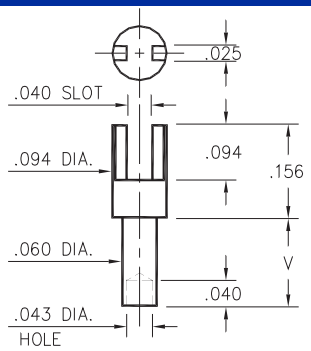


**2323-X-01-XX-00-00-07-0**
Swage mount in .064 hole

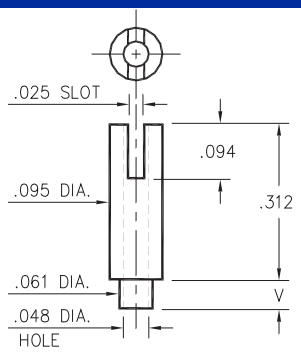


**2322-X-01-XX-00-00-07-0**
Swage mount in .064 hole

| - X - | Board Thick-ness | Length V |
|---|---|---|
| 1 | .031 | .053 |
| 2 | .062 | .084 |
| 3 | .094 | .115 |
| 4 | .125 | .147 |

## 2320

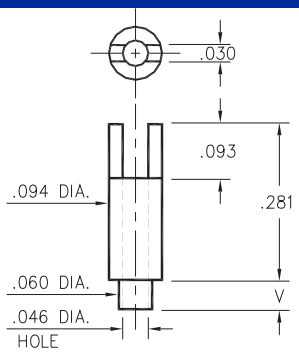


**2320-X-01-XX-00-00-07-0**
Swage mount in .064 hole

| - X - | Board Thick-ness | Length V |
|---|---|---|
| 1 | .031 | .053 |
| 2 | .062 | .084 |
| 3 | .094 | .115 |

## 2328

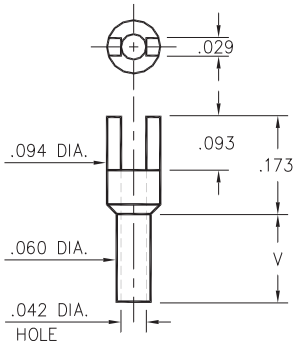


**2328-X-01-XX-00-00-07-0**
Swage mount in .064 hole

| - X - | Board Thick-ness | Length V |
|---|---|---|
| 1 | .031 | .062 |
| 2 | .062 | .094 |
| 3 | .094 | .125 |
| 4 | .125 | .156 |

## 2520/2517

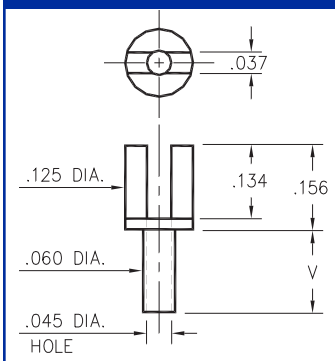


**2520-X-01-XX-00-00-07-0**
Swage mount in .064 hole

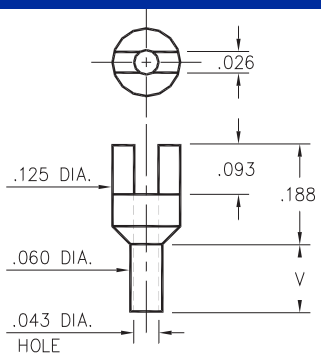


**2517-X-01-XX-00-00-07-0**
Swage mount in .064 hole

| - X - | Board Thick-ness | Length V |
|---|---|---|
| 1 | .031 | .062 |
| 2 | .062 | .094 |
| 3 | .094 | .125 |
| 4 | .125 | .156 |

## SPECIFICATIONS

**PIN MATERIAL:**
Brass Alloy 360, 1/2 Hard
Swage pins are annealed

**DIMENSION IN INCHES**
**TOLERANCES ON:**
LENGTHS: ±.005
DIAMETERS: ±.002
ANGLES: ± 2°

**ORDER CODE: XXXX - X - 01 - XX - 00 - 00 - 07 - 0**

**BASIC PART #**

**SPECIFY PIN FINISH:**
**01** 200µ" TIN/LEAD OVER NICKEL
◇ **80** 200µ" TIN OVER NICKEL (RoHS)
◇ **44** 300µ" SILVER OVER COPPER (RoHS)
◇ **50** 300µ" ELECTRO-SOLDER (RoHS) (60/40 SnPb)

RoHS 2002/95/EC

## 2315

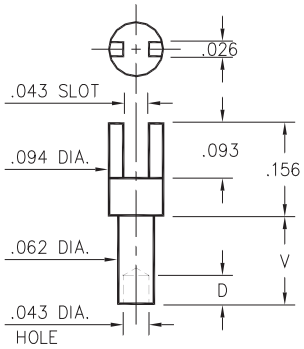


| - X - | Board Thick-ness | Length V | Depth D |
|---|---|---|---|
| 1 | .031 | .045 | .040 |
| 2 | .062 | .094 | .062 |
| 3 | .094 | .125 | |
| 4 | .125 | .156 | |

**2315-X-01-XX-00-00-07-0**
Swage mount in .067 hole

## 2302

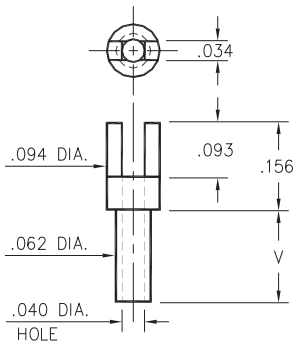


| - X - | Board Thick-ness | Length V |
|---|---|---|
| 1 | .031 | .053 |
| 2 | .062 | .084 |
| 3 | .094 | .115 |
| 4 | .125 | .147 |

**2302-X-01-XX-00-00-07-0**
Swage mount in .067 hole.

## 2352

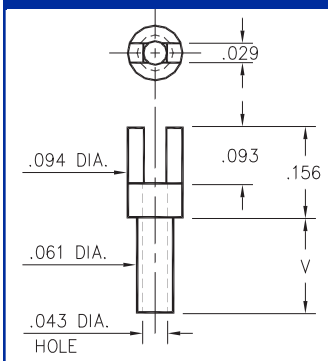


| - X - | Board Thick-ness | Length V |
|---|---|---|
| 1 | .031 | .045 |
| 2 | .062 | .094 |
| 3 | .094 | .125 |
| 4 | .125 | .156 |

**2352-X-01-XX-00-00-07-0**
Swage mount in .067 hole

## 2362

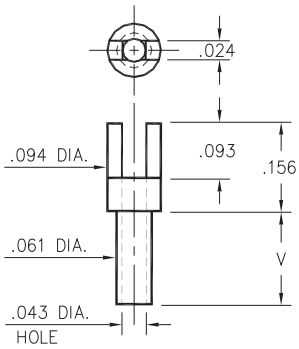


| - X - | Board Thick-ness | Length V |
|---|---|---|
| 5 | .016 | .037 |
| 1 | .031 | .053 |
| 2 | .062 | .084 |
| 3 | .094 | .115 |
| 4 | .125 | .147 |

**2362-X-01-XX-00-00-07-0**
Swage mount in .067 hole

## 2507/2526

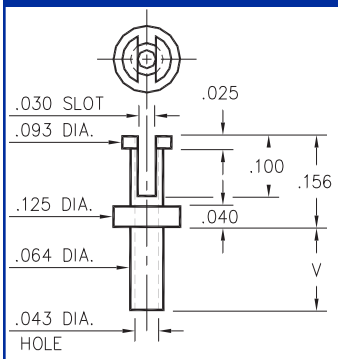


**2507-X-01-XX-00-00-07-0**
Swage mount in .067 hole

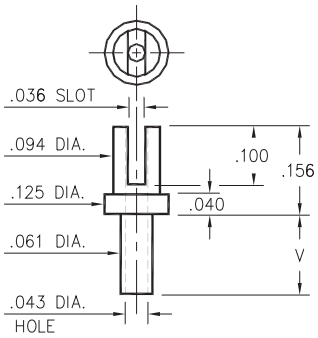


**2526-X-01-XX-00-00-07-0**
Swage mount in .064 hole

| - X - | Board Thick-ness | Length V |
|---|---|---|
| 1 | .031 | .053 |
| 2 | .062 | .084 |
| 3 | .094 | .115 |
| 4 | .125 | .147 |

## SPECIFICATIONS

**PIN MATERIAL:**
Brass Alloy 360, 1/2 Hard
Swage pins are annealed

**DIMENSION IN INCHES**
**TOLERANCES ON:**
LENGTHS: ±.005
DIAMETERS: ±.002
ANGLES: ± 2°

**ORDER CODE: XXXX - X - 01 - XX - 00 - 00 - 07 - 0**

**BASIC PART #**

**SPECIFY PIN FINISH:**
**01** 200µ" TIN/LEAD OVER NICKEL
◇ **80** 200µ" TIN OVER NICKEL (RoHS)
◇ **44** 300µ" SILVER OVER COPPER (RoHS)
◇ **50** 300µ" ELECTRO-SOLDER (RoHS) (60/40 SnPb)

RoHS 2002/95/EC

## 2314

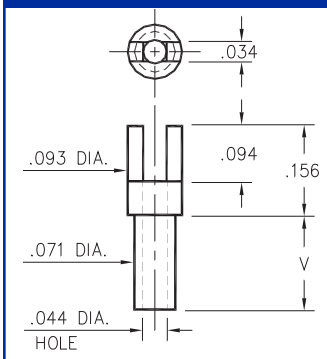


| - X - | Board Thick-ness | Length V |
|---|---|---|
| 1 | .031 | .045 |
| 2 | .062 | .094 |
| 3 | .094 | .125 |
| 4 | .125 | .156 |

**2314-X-01-XX-00-00-07-0**
Swage mount in .076 hole

## 2511

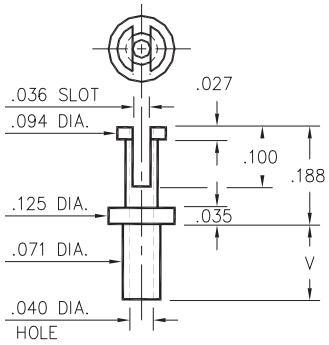


| - X - | Board Thick-ness | Length V |
|---|---|---|
| 1 | .031 | .063 |
| 2 | .062 | .094 |
| 3 | .094 | .125 |
| 4 | .125 | .156 |

**2511-X-01-XX-00-00-07-0**
Swage mount in .076 hole

## 2515/2516

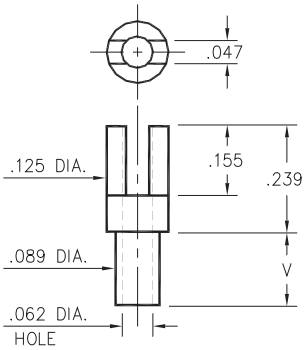


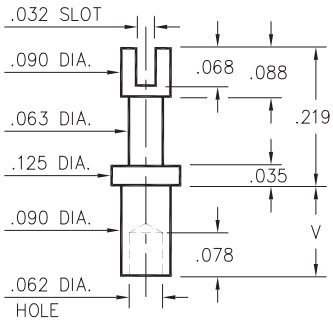


| - X - | Board Thick-ness | Length V |
|---|---|---|
| 1 | .031 | .075 |
| 2 | .062 | .105 |
| 3 | .094 | .135 |
| 4 | .125 | .147 |

**2515-X-01-XX-00-00-07-0**
Swage mount in .094 hole

**2516-X-01-XX-00-00-07-0**
Swage mount in .094 hole

## 2502

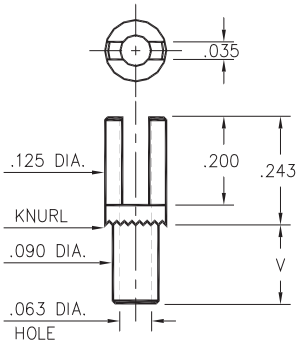


| - X - | Board Thick-ness | Length V |
|---|---|---|
| 1 | .031 | .080 |
| 2 | .062 | .111 |
| 3 | .094 | .143 |
| 4 | .125 | .174 |

**2502-X-01-XX-00-00-07-0**
Swage mount in .094 hole

## SPECIFICATIONS

**PIN MATERIAL:**
Brass Alloy 360, 1/2 Hard
Swage pins are annealed

**DIMENSION IN INCHES**
**TOLERANCES ON:**
LENGTHS: ±.005
DIAMETERS: ±.002
ANGLES: ± 2°

**ORDER CODE: XXXX - X - 01 - XX - 00 - 00 - 07 - 0**

**BASIC PART #**

**SPECIFY PIN FINISH:**
**01** 200µ" TIN/LEAD OVER NICKEL
◇ **80** 200µ" TIN OVER NICKEL (RoHS)
◇ **44** 300µ" SILVER OVER COPPER (RoHS)
◇ **50** 300µ" ELECTRO-SOLDER (RoHS) (60/40 SnPb)

RoHS 2002/95/EC

## 2715

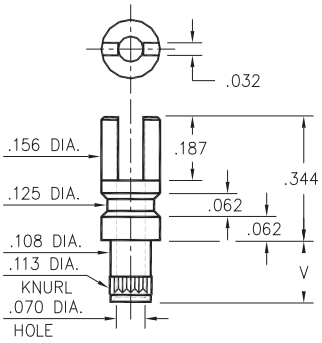


| - X - | Board Thick-ness | Length V |
|---|---|---|
| 2 | .062 | .109 |
| 3 | .094 | .141 |
| 4 | .125 | .172 |

**2715-X-01-XX-00-00-07-0**
Swage mount in .116 hole

## 2809

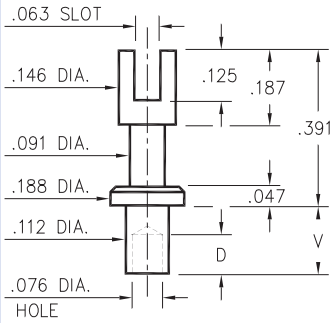


| - X - | Board Thick-ness | Length V | Depth D |
|---|---|---|---|
| 1 | .031 | .078 | .068 |
| 2 | .062 | .109 | |
| 3 | .094 | .141 | .098 |
| 4 | .125 | .172 | |

**2809-X-01-XX-00-00-07-0**
Swage mount in .116 hole

## 2701/2808

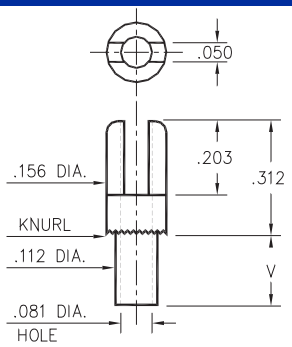


**2701-X-01-XX-00-00-07-0**
Swage mount in .116 hole

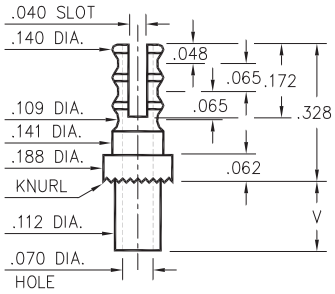


| - X - | Board Thick-ness | Length V |
|---|---|---|
| 1 | .031 | .075 |
| 2 | .062 | .105 |
| 3 | .094 | .135 |
| 4 | .125 | .165 |

**2808-X-01-XX-00-00-07-0**
Swage mount in .116 hole

## 2762

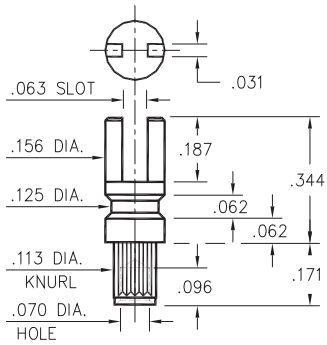


**2762-4-01-XX-00-00-07-0**
Swage mount in .116 hole
For .125 thick board

## 2807

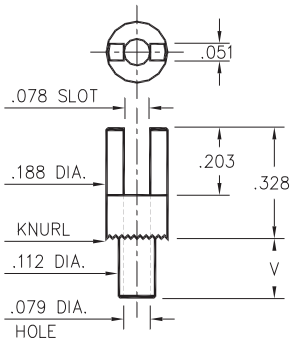


| - X - | Board Thick-ness | Length V |
|---|---|---|
| 1 | .031 | .078 |
| 2 | .062 | .109 |
| 3 | .094 | .140 |
| 4 | .125 | .171 |

**2807-X-01-XX-00-00-07-0**
Swage mount in .116 hole

## SPECIFICATIONS

**PIN MATERIAL:**
Brass Alloy 360, 1/2 Hard
Swage pins are annealed

**DIMENSION IN INCHES**
**TOLERANCES ON:**
LENGTHS: ±.005
DIAMETERS: ±.002
ANGLES: ± 2°

**ORDER CODE: XXXX - X - 01 - XX - 00 - 00 - 07 - 0**

**BASIC PART #**

**SPECIFY PIN FINISH:**
**01** 200µ" TIN/LEAD OVER NICKEL
◇ **80** 200µ" TIN OVER NICKEL (RoHS)
◇ **44** 300µ" SILVER OVER COPPER (RoHS)
◇ **50** 300µ" ELECTRO-SOLDER (RoHS) (60/40 SnPb)

RoHS 2002/95/EC

## 2709

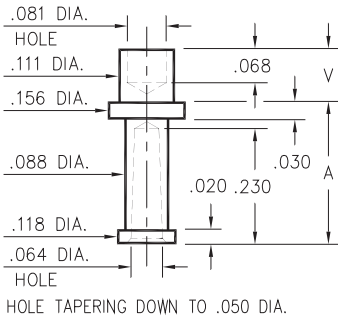


| - X - | Board Thick-ness | Length V | Length A |
|---|---|---|---|
| 2 | .062 | .109 | .281 |
| 3 | .094 | .141 | .250 |

**2709-X-07-XX-00-00-07-0**
Swage mount in .116 hole

## 8602

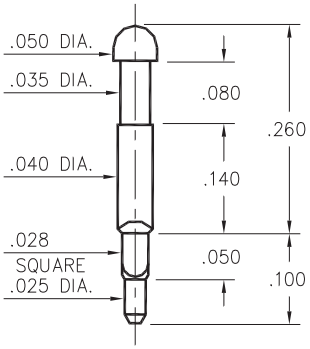


**8602-1-00-XX-00-00-07-0**
Square press-fit in .032
plated thru hole

## 2115

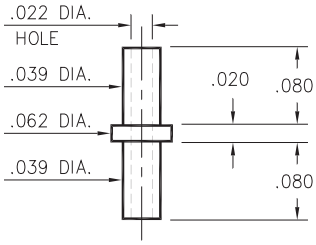


**2115-2-00-XX-00-00-07-0**
Swage mount in .043 hole
For .062 thick board

## 2326

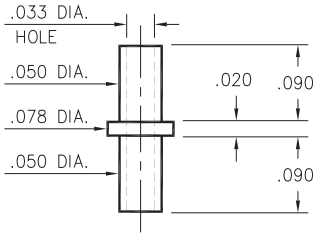


**2326-2-00-XX-00-00-07-0**
Swage mount in .055 hole
for .062 thick board

## 8831

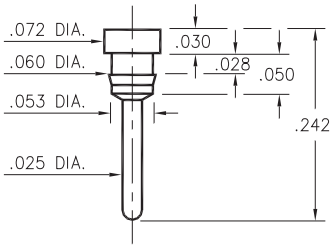


**8831-0-00-XX-00-00-03-0**
Press-fit in .057 mounting hole

## 8835

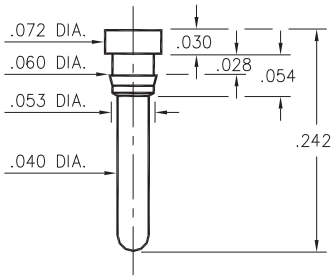


**8835-0-00-XX-00-00-03-0**
Press-fit in .057 mounting hole

## 8836

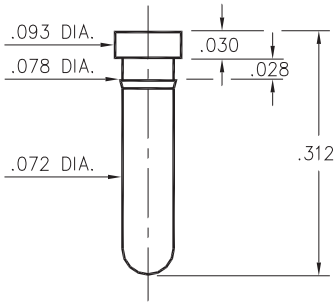


**8836-0-00-XX-00-00-03-0**
Press-fit in .075 mounting hole

## SPECIFICATIONS

**PIN MATERIAL:**
Brass Alloy 360, 1/2 Hard
Swage pins are annealed

**DIMENSION IN INCHES**
**TOLERANCES ON:**
LENGTHS: ±.005
DIAMETERS: ±.002
ANGLES: ± 2°

**ORDER CODE: XXXX - X - XX - XX - 00 - 00 - XX - 0**

**BASIC PART #**

**SPECIFY PIN FINISH:**
**01** 200µ" TIN/LEAD OVER NICKEL
◇ **80** 200µ" TIN OVER NICKEL (RoHS)
◇ **44** 300µ" SILVER OVER COPPER (RoHS)
◇ **50** 300µ" ELECTRO-SOLDER (RoHS) (60/40 SnPb)

RoHS 2002/95/EC

## 2318

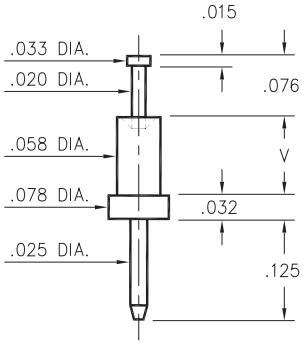


| - X - | Board Thick-ness | Length V |
|---|---|---|
| 1 | .031 | .051 |
| 2 | .062 | .082 |
| 3 | .094 | .113 |

**2318-X-00-XX-00-00-07-0**
Swage mount in .062 hole

## 2309

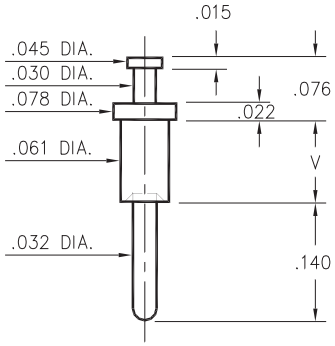


| - X - | Board Thick-ness | Length V |
|---|---|---|
| 1 | .031 | .054 |
| 2 | .062 | .084 |
| 3 | .094 | .115 |
| 4 | .125 | .147 |

**2309-X-00-XX-00-00-07-0**
Swage mount in .064 hole

## 2514

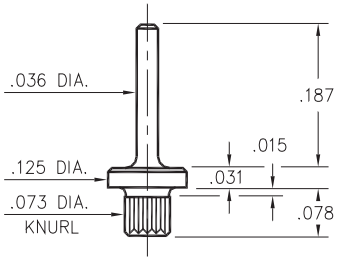


**2514-2-00-XX-00-00-07-0**
Press-fit in .070 mounting hole

## SPECIFICATIONS

**PIN MATERIAL:**
Brass Alloy 360, 1/2 Hard
Swage pins are annealed

**DIMENSION IN INCHES**
**TOLERANCES ON:**
LENGTHS: ±.005
DIAMETERS: ±.002
ANGLES: ± 2°

**ORDER CODE: XXXX - X - 00 - XX - 00 - 00 - 07 - 0**

**BASIC PART #**

**SPECIFY PIN FINISH:**
**01** 200µ" TIN/LEAD OVER NICKEL
◇ **80** 200µ" TIN OVER NICKEL (RoHS)
◇ **44** 300µ" SILVER OVER COPPER (RoHS)
◇ **50** 300µ" ELECTRO-SOLDER (RoHS) (60/40 SnPb)

RoHS 2002/95/EC

## 2319

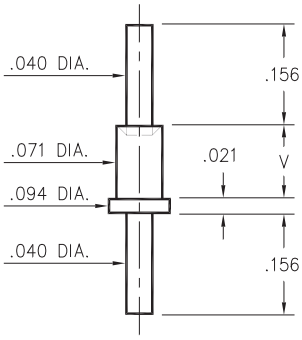


| - X - | Board Thick-ness | Length V |
|---|---|---|
| 1 | .031 | .051 |
| 2 | .062 | .082 |
| 3 | .094 | .113 |

**2319-X-00-XX-00-00-07-0**
Swage mount in .076 hole

## 2313

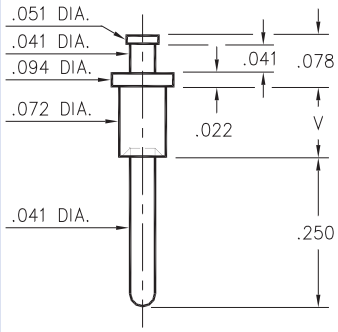


| - X - | Board Thick-ness | Length V |
|---|---|---|
| 1 | .031 | .051 |
| 2 | .062 | .084 |
| 3 | .094 | .113 |
| 4 | .125 | .145 |

**2313-X-00-XX-00-00-07-0**
Swage mount in .076 hole

## 2321

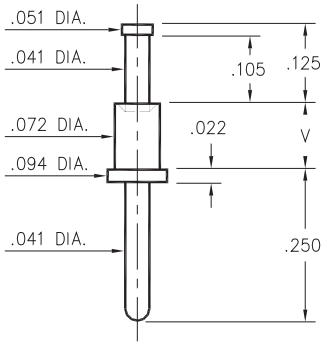


| - X - | Board Thick-ness | Length V |
|---|---|---|
| 1 | .031 | .051 |
| 2 | .062 | .082 |
| 3 | .094 | .113 |
| 4 | .125 | .145 |

**2321-X-00-XX-00-00-07-0**
Swage mount in .076 hole

## 2706

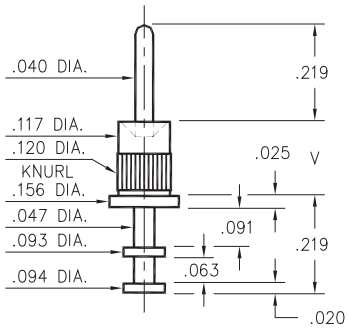


| - X - | Board Thick-ness | Length V |
|---|---|---|
| 1 | .031 | .063 |
| 2 | .062 | .093 |
| 3 | .094 | .125 |
| 4 | .125 | .156 |

**2706-X-00-XX-00-00-07-0**
Swage mount in .120 hole

## 2530

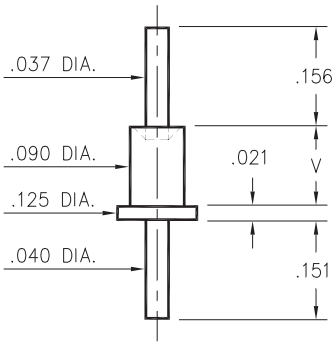


| - X - | Board Thick-ness | Length V |
|---|---|---|
| 2 | .062 | .094 |
| 3 | .094 | .125 |
| 4 | .125 | .156 |

**2530-X-00-XX-00-00-07-0**
Swage mount in .094 hole

## 3156

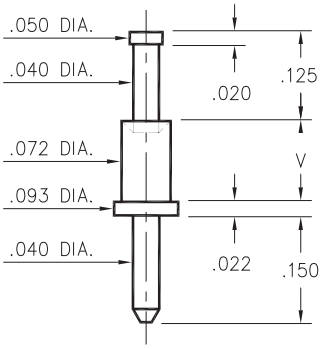


| Basic Part Number | Board Thickness | Length V |
|---|---|---|
| 3156-1 | .031 | .051 |
| 3156-2 | .062 | .082 |
| 3156-3 | .094 | .113 |
| 3156-4 | .125 | .145 |

**3156-X-00-XX-00-00-08-0**
Swage mount in .076 hole

## SPECIFICATIONS

**PIN MATERIAL:**
Brass Alloy 360, 1/2 Hard
Swage pins are annealed

**DIMENSION IN INCHES**
**TOLERANCES ON:**
LENGTHS: ±.005
DIAMETERS: ±.002
ANGLES: ± 2°

**ORDER CODE: XXXX - X - 00 - XX - 00 - 00 - XX - 0**

**BASIC PART #**

**SPECIFY PIN FINISH:**
**01** 200µ" TIN/LEAD OVER NICKEL
◇ **80** 200µ" TIN OVER NICKEL (RoHS)
◇ **44** 300µ" SILVER OVER COPPER (RoHS)
◇ **50** 300µ" ELECTRO-SOLDER (RoHS) (60/40 SnPb)

RoHS 2002/95/EC

# CUSTOM PIN/RECEPTACLE WORKSHEET

**PHOTOCOPY THIS PAGE AND FAX, SCAN OR E-MAIL TO MILL-MAX FOR A PROMPT QUOTATION**

**Mill-Max Mfg. Corp., P.O. Box 300, 190 Pine Hollow Road, Oyster Bay, NY 11771-0300. Fax: 516-922-9253**

NAME _____ TITLE: _____

COMPANY _____ DATE: _____

ADDRESS _____ PHONE: _____

_____ FAX: _____

**QUANTITIES TO QUOTE** _____

## SPECIFICATIONS OF MACHINED PINS, TERMINALS, RECEPTACLE SHELLS, etc.

SIMILAR MILL-MAX PART #:_____

MATERIAL:
- ☐ BRASS
- ☐ PHOSPHOR BRONZE
- ☐ TELLURIUM COPPER

(check available stock sizes on page 227)

FINISH:
- ☐ TIN over NICKEL
- ☐ TIN/LEAD over COPPER
- ☐ _____μ" GOLD over NICKEL
- ☐ SILVER over COPPER
- ☐ OTHER:_____

STANDARD MACHINING TOLERANCES ARE ± .002" FOR DIAMETERS, ±.005" FOR LENGTHS. IF TIGHTER TOLERANCES ARE REQUIRED, PLEASE SPECIFY CRITICAL DIMENSIONS ON SKETCH BELOW.

## ADDITIONAL SPECIFICATIONS FOR RECEPTACLE ONLY

SIZE OF MATING PIN OR COMPONENT LEAD:_____
(round/square/rectangular)

LENGTH OF MATING PIN/LEAD:_____

USE MILL-MAX CONTACT TYPE #:_____
(see page 214 for selector chart)

REQUIRED INSERTION/ EXTRACTION FORCES: ☐ LOW ☐ MEDIUM ☐ HIGH

CONTACT FINISH:
- ☐ TIN over NICKEL
- ☐ _____μ" GOLD over NICKEL
- ☐ OTHER:_____

ARE THERE ANY UNUSUAL REQUIREMENTS SUCH AS HIGH OPERATING TEMPERATURE OR CURRENT RATING?

_____

_____

**IF YOU NEED ASSISTANCE, PLEASE CALL MILL-MAX AND ASK FOR AN APPLICATIONS ENGINEER**

## THE "MULTI-FINGER" CONTACT

Mill-Max makes pin receptacles by press-fitting a "multi-finger" spring contact into a machined shell. A selection of 34 contact types are pre-tooled for those who wish to design custom receptacles. This extensive family of contacts will accept round pins ranging from .008" to .102" diameter, as well as rectangular component leads and square wraposts, where the effective diameter is taken as the diagonal dimension of the lead.

Many contacts are interchangeable within a given shell, and so the contact selector chart has been organized by alternate contact groupings. Standard receptacles found in this catalog can be easily assembled with alternate contacts to suit special applications, for example: low insertion force or high operating temperature.

| Contact Groups | Contact Type | Accepts Minimum Pin Diameter | Accepts Maximum Pin Diameter | Contact Compliancy | Contact Length | Number of Fingers | Contact Material | Current Rating ( For 10°C ΔT) |
|---|---|---|---|---|---|---|---|---|
| No Alternate | #04 | .008 | .013 | .003 | .053 | 3 | BeCu | 2A |
| No Alternate | #10 | .012 | .017 | | .060 | 6 | | |
| A | #09 | .015 | .018 | .002 | .051 | 3 | | 3A |
| | #11 | | .020 | .003 | .075 | | | |
| | #21 | | .022 | .004 | | | | |
| | #05 | | | | | | | |
| B | #12 | | | .003 | .062 | 4 | | |
| | #22 | | | .005 | | 6 | | |
| C | #30 | | .025 | | .083 | 4 | | |
| | #38 | | | .004 | | | BeNi | |
| | #32 | | .026 | .009 | | 6 | BeCu | |
| | #35 | | | .008 | | | | |
| | #43 | | | | | | | |
| No Alternate | #15 | .022 | .032 | .004 | | | | 4.5A |
| D | #06 | | | .007 | .113 | 4 | | |
| | #26 | | | .005 | | | BeNi | |
| | #16 | | .034 | .006 | .083 | 6 | BeCu | |
| | #47 | .025 | .037 | .011 | | | | |
| No Alternate | #18 | .037 | .043 | .004 | .062 | | | 8A |
| E | #36 | .022 | .042 | .022 | .120 | 4 | | |
| | #49 | .032 | .046 | .006 | .125 | | | |
| | #34 | | | .010 | .120 | | | |
| | #24 | | | .009 | | | BeNi | |
| F | #02 | .040 | .050 | .006 | .084 | 6 | BeCu | |
| | #28 | .042 | .052 | .005 | | | | |
| J | #42 | .053 | .063 | .004 | .150 | 4 | | 20A |
| | #03 | .040 | .060 | .010 | | | | 11.2A |
| G | #23 | .045 | .065 | .008 | .100 | 6 | | |
| | #13 | .048 | .064 | .010 | .127 | 4 | | |
| | #33 | | | .008 | | | BeNi | |
| H | #07 | .065 | .082 | .013 | .150 | | BeCu | 15A |
| | #27 | | | .012 | | | BeNi | |
| | #14 | | .085 | .014 | | | BeCu | |
| | | | | | | | | |
| No Alternate | #08 | .084 | .102 | .011 | .122 | 6 | | 18A |

## CONTACT SPECIFICATIONS

### COMPLIANCY (δ)

The Mill-Max "multi-finger" contact exhibits wide compliance, eg. the ability of any single contact to accept a broad range of round pins as well as rectangular or square component leads. This ability is referred to as the contact's "compliancy". The compliancy factor (δ) specifies the re-configured operating range after the initial insertion of the largest permissible mating pin. For example: the # 34 contact has an initial operating range from .032" to .047" diameter pins, and a compliancy of .010"; but after insertion of a .047" pin, the contact is sized, and the minimum pin acceptance becomes .047" - .010" = .037". Thus, the new operating range becomes .037" to .047".

The insertion/extraction/normal force characteristics that follow were derived using 30μ" gold plated contact and polished steel, gauge pins having a bullet-shaped tip. The curves represent typical average values. The charts only guide you in selecting a clip that is close to your specification. Your results may vary, so for your specification, **log onto www.mill-max.com to obtain complimentary samples of a receptacle assembly for your evaluation.**

### NORMAL FORCE

Normal force is the force with which each finger of the "multi-finger" contact grips the mating pin or component lead. For normal forces below 30 grams, gold on both the pin and contact is recommended. For normal forces above 100 grams, tin finish has proven to be very reliable.

### CURRENT RATING

Current rating for each contact group can be found in the contact selector chart on page 214. This current rating (for a 10° C temperature rise above ambient) is conservative since it rates an individual pin/ receptacle pair in the free air. For all practical applications, the current rating will be higher because of the heat sinking ability of wires and circuit traces attached to the pin and receptacles.

### CONTACT MATERIAL AND STRESS RELAXATION AT HIGH TEMPERATURE

Mill-Max contacts are made from either beryllium copper or beryllium nickel that has been heat treated to achieve ultimate spring properties. The graph illustrates how beryllium copper loses its spring properties over time at a high temperature (225°C). Thus, for burn-in applications and continuous operation above 150°C, beryllium nickel should be substituted for beryllium copper.

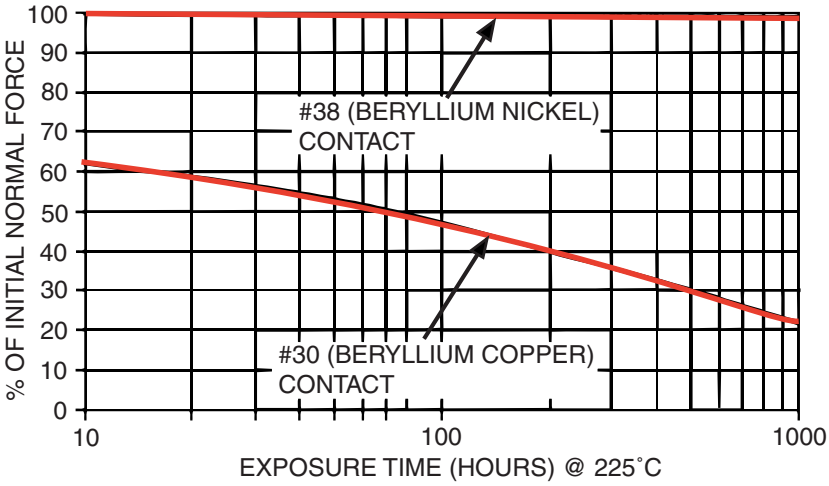

# CONTACT DATA

## Insertion / Extraction Force Graphs

## #04 CONTACT

FOR .008-.013 DIAMETER PINS (δ=.003)
3-FINGER (see page 214)

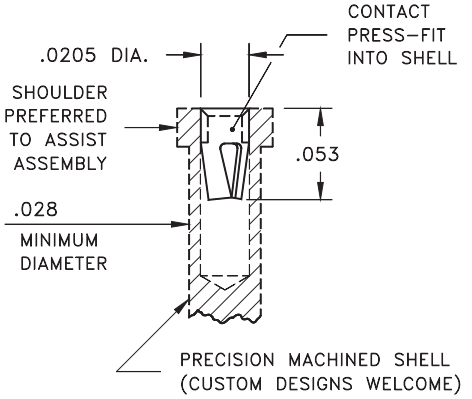


**CONTACT MATERIAL:**
BERYLLIUM COPPER Alloy 172, Heat Treated

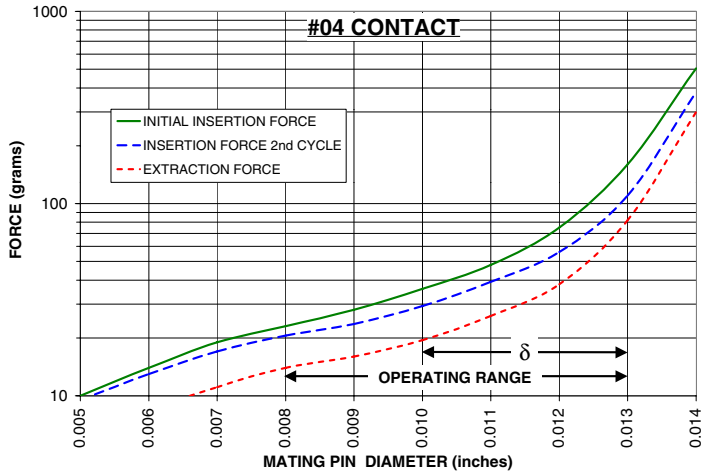


The insertion/extraction/normal force characteristics above were derived using 30 microinch gold plated contact and polished steel gauge pins having a bullet-shaped tip.

The curves represent typical average values; they are best used to compare the differences between similar size contacts and to guide you in selecting one that is suitable for your application. Your results may vary, so for your specification, we encourage you to obtain complimentary samples for your evaluation.

## #10 CONTACT

FOR .012-.017 DIAMETER PINS (δ=.003)
6-FINGER (see page 214)

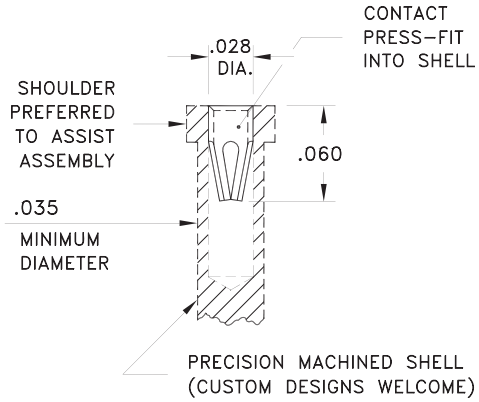


**CONTACT MATERIAL:**
BERYLLIUM COPPER Alloy 172, Heat Treated

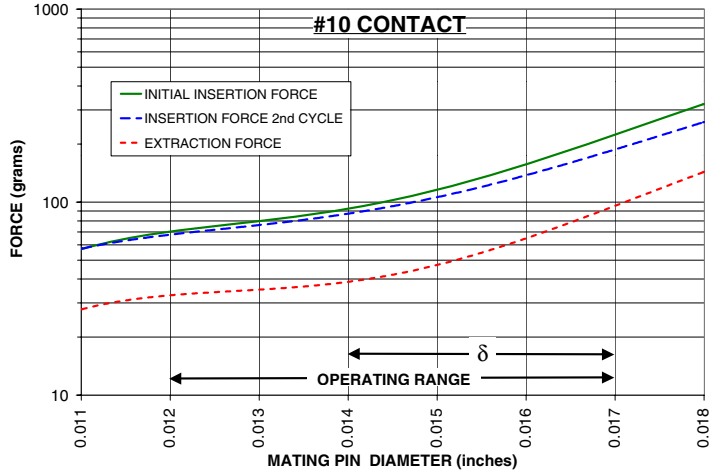


The insertion/extraction/normal force characteristics above were derived using 30 microinch gold plated contact and polished steel gauge pins having a bullet-shaped tip.

The curves represent typical average values; they are best used to compare the differences between similar size contacts and to guide you in selecting one that is suitable for your application. Your results may vary, so for your specification, we encourage you to obtain complimentary samples for your evaluation.

## #09 CONTACT

FOR .015-.018 DIAMETER PINS (δ=.002)
3-FINGER, GROUP A (see page 214)

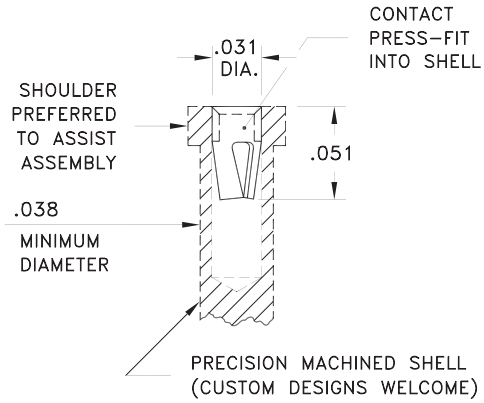


**CONTACT MATERIAL:**
BERYLLIUM COPPER Alloy 172, Heat Treated

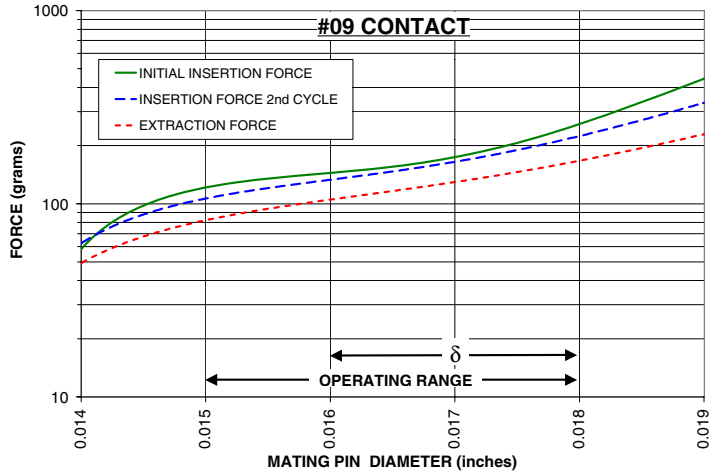


The insertion/extraction/normal force characteristics above were derived using 30 microinch gold plated contact and polished steel gauge pins having a bullet-shaped tip.

The curves represent typical average values; they are best used to compare the differences between similar size contacts and to guide you in selecting one that is suitable for your application. Your results may vary, so for your specification, we encourage you to obtain complimentary samples for your evaluation.

# CONTACT DATA

## Insertion / Extraction Force Graphs

## #11 CONTACT

FOR .015-.020 DIAMETER PINS (δ=.003)
3-FINGER, GROUP A (see page 214)

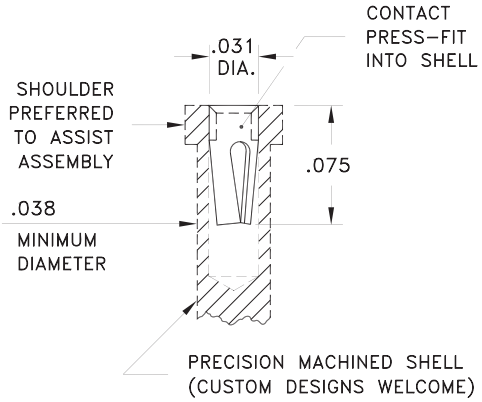


**CONTACT MATERIAL:**
BERYLLIUM COPPER Alloy 172, Heat Treated

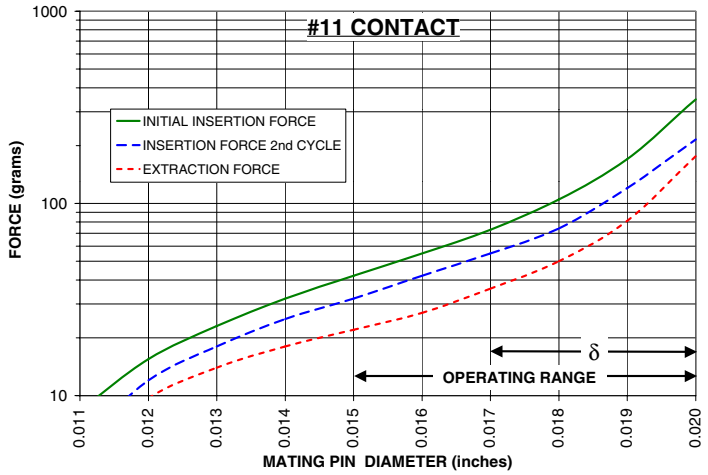


The insertion/extraction/normal force characteristics above were derived using 30 microinch gold plated contact and polished steel gauge pins having a bullet-shaped tip.

The curves represent typical average values; they are best used to compare the differences between similar size contacts and to guide you in selecting one that is suitable for your application. Your results may vary, so for your specification, we encourage you to obtain complimentary samples for your evaluation.

## #21 CONTACT

FOR .015-.022 DIAMETER PINS (δ=.004)
3-FINGER, GROUP A (see page 214)

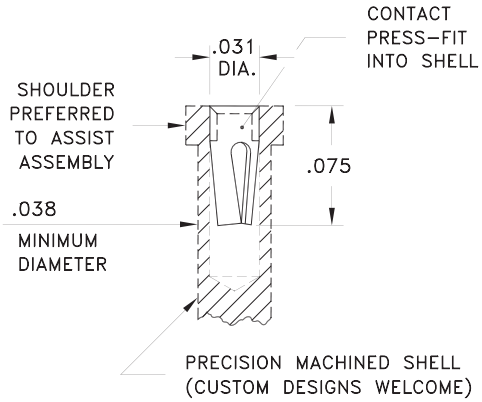


**CONTACT MATERIAL:**
BERYLLIUM COPPER Alloy 172, Heat Treated

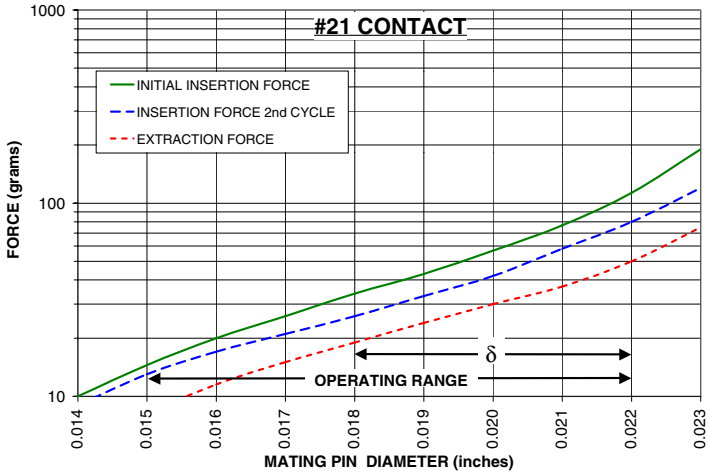


The insertion/extraction/normal force characteristics above were derived using 30 microinch gold plated contact and polished steel gauge pins having a bullet-shaped tip.

The curves represent typical average values; they are best used to compare the differences between similar size contacts and to guide you in selecting one that is suitable for your application. Your results may vary, so for your specification, we encourage you to obtain complimentary samples for your evaluation.

## #05 CONTACT

FOR .015-.022 DIAMETER PINS (δ=.004)
3-FINGER, GROUP A (see page 214)

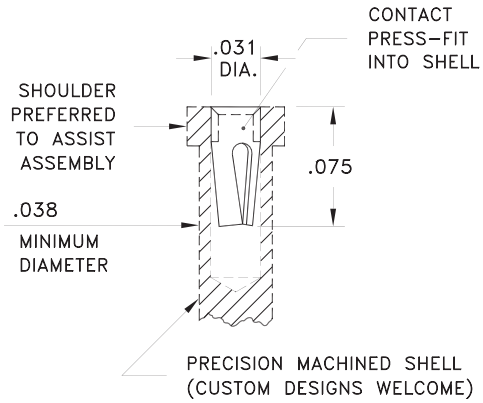


**CONTACT MATERIAL:**
BERYLLIUM COPPER Alloy 172, Heat Treated

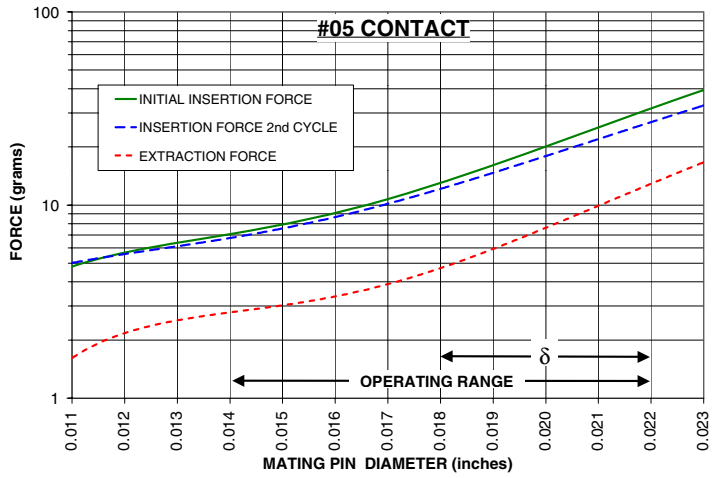


The insertion/extraction/normal force characteristics above were derived using 30 microinch gold plated contact and polished steel gauge pins having a bullet-shaped tip.

The curves represent typical average values; they are best used to compare the differences between similar size contacts and to guide you in selecting one that is suitable for your application. Your results may vary, so for your specification, we encourage you to obtain complimentary samples for your evaluation.

# CONTACT DATA

## Insertion / Extraction Force Graphs

## #12 CONTACT

FOR .015-.022 DIAMETER PINS (δ=.003)
4-FINGER, GROUP B (see page 214)

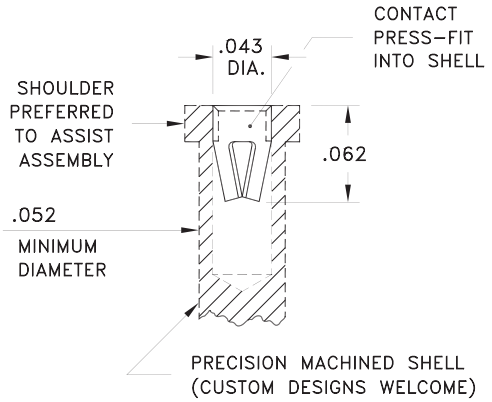


**CONTACT MATERIAL:**
BERYLLIUM COPPER Alloy 172, Heat Treated

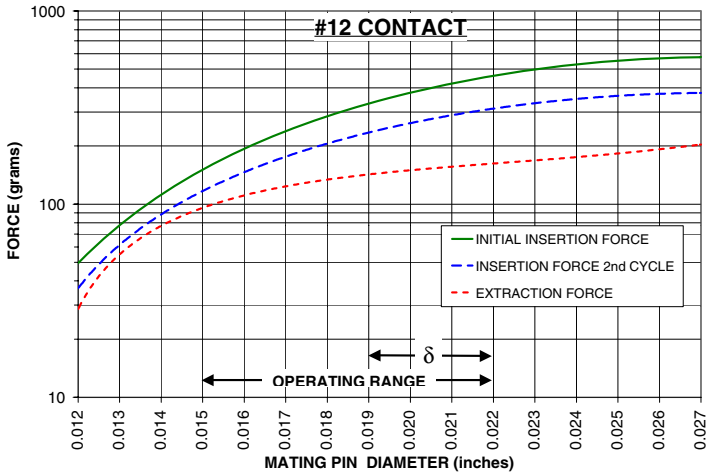


The insertion/extraction/normal force characteristics above were derived using 30 microinch gold plated contact and polished steel gauge pins having a bullet-shaped tip.

The curves represent typical average values; they are best used to compare the differences between similar size contacts and to guide you in selecting one that is suitable for your application. Your results may vary, so for your specification, we encourage you to obtain complimentary samples for your evaluation.

## #22 CONTACT

FOR .015-.022 DIAMETER PINS (δ=.005)
6-FINGER, GROUP B (see page 214)

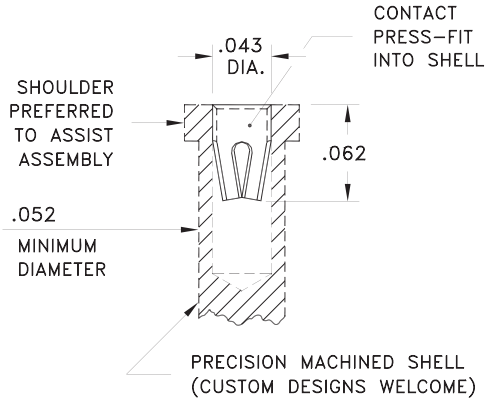


**CONTACT MATERIAL:**
BERYLLIUM COPPER Alloy 172, Heat Treated

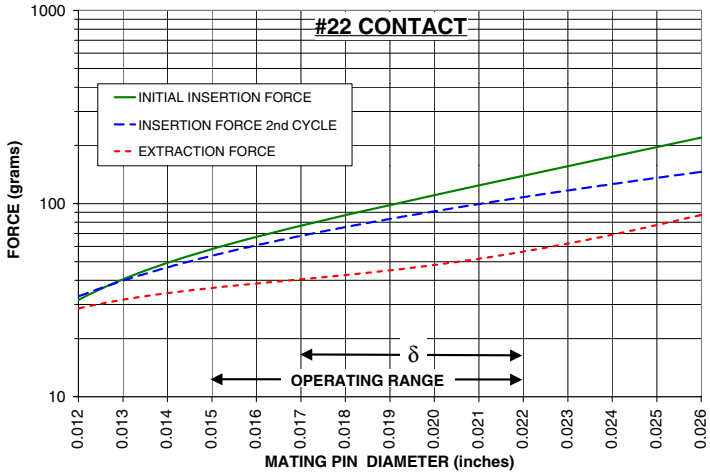


The insertion/extraction/normal force characteristics above were derived using 30 microinch gold plated contact and polished steel gauge pins having a bullet-shaped tip.

The curves represent typical average values; they are best used to compare the differences between similar size contacts and to guide you in selecting one that is suitable for your application. Your results may vary, so for your specification, we encourage you to obtain complimentary samples for your evaluation.

## #30 CONTACT

FOR .015-.025 DIAMETER PINS (δ=.005)
4-FINGER, GROUP C (see page 214)

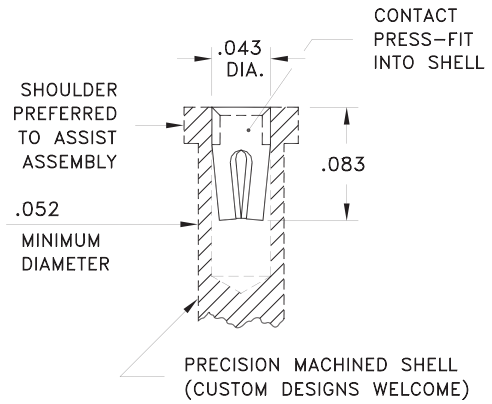


**CONTACT MATERIAL:**
BERYLLIUM COPPER Alloy 172, Heat Treated

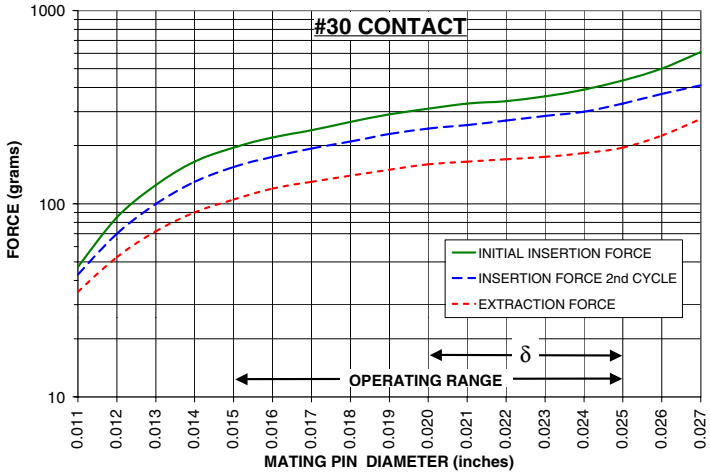


The insertion/extraction/normal force characteristics above were derived using 30 microinch gold plated contact and polished steel gauge pins having a bullet-shaped tip.

The curves represent typical average values; they are best used to compare the differences between similar size contacts and to guide you in selecting one that is suitable for your application. Your results may vary, so for your specification, we encourage you to obtain complimentary samples for your evaluation.

# CONTACT DATA

## Insertion / Extraction Force Graphs

## #38 CONTACT

FOR .015-.025 DIAMETER PINS (δ=.004)
4-FINGER, GROUP C (see page 214)

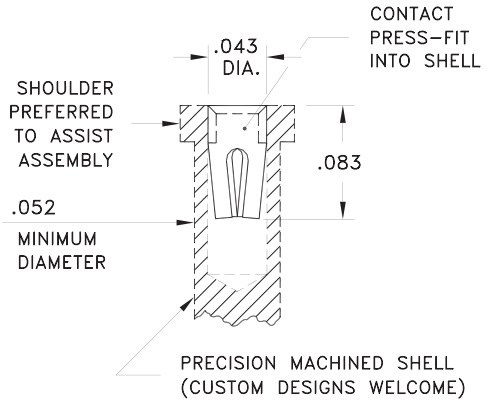


**CONTACT MATERIAL:**
BERYLLIUM NICKEL Alloy 360, Heat Treated

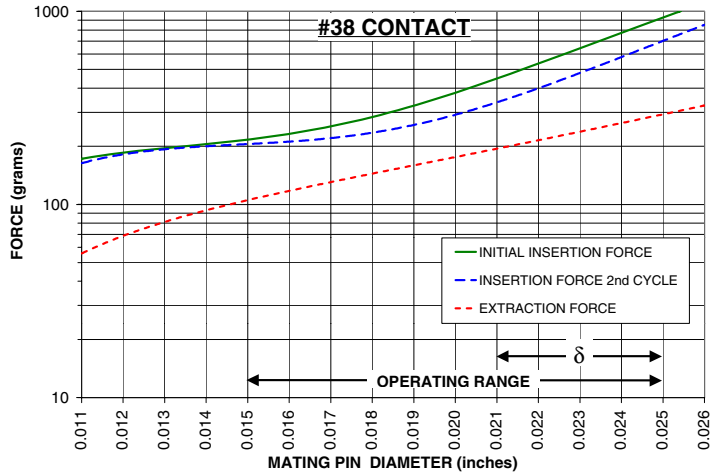


The insertion/extraction/normal force characteristics above were derived using 30 microinch gold plated contact and polished steel gauge pins having a bullet-shaped tip.

The curves represent typical average values; they are best used to compare the differences between similar size contacts and to guide you in selecting one that is suitable for your application. Your results may vary, so for your specification, we encourage you to obtain complimentary samples for your evaluation.

## #32 CONTACT

FOR .015-.026 DIAMETER PINS (δ=.009)
6-FINGER, GROUP C (see page 214)

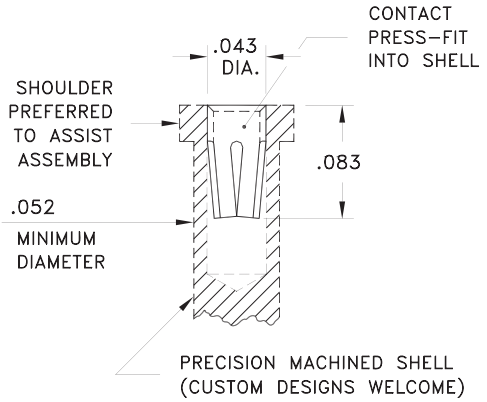


**CONTACT MATERIAL:**
BERYLLIUM COPPER Alloy 172, Heat Treated

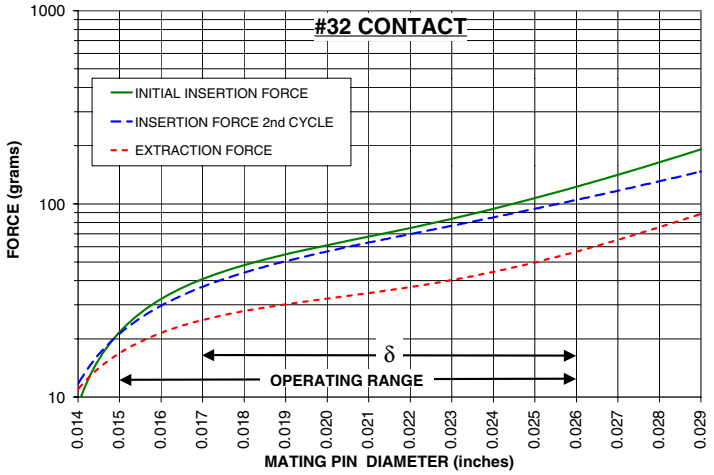


The insertion/extraction/normal force characteristics above were derived using 30 microinch gold plated contact and polished steel gauge pins having a bullet-shaped tip.

The curves represent typical average values; they are best used to compare the differences between similar size contacts and to guide you in selecting one that is suitable for your application. Your results may vary, so for your specification, we encourage you to obtain complimentary samples for your evaluation.

## #35 CONTACT

FOR .015-.026 DIAMETER PINS (δ=.008)
6-FINGER, GROUP C (see page 214)

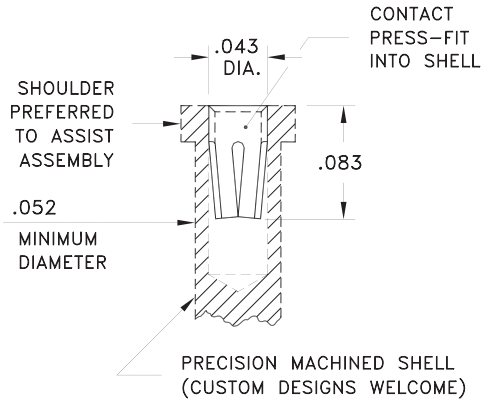


**CONTACT MATERIAL:**
BERYLLIUM COPPER Alloy 172, Heat Treated

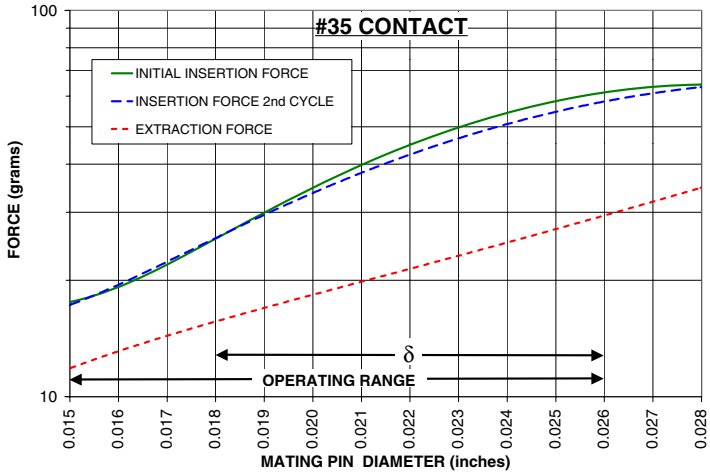


The insertion/extraction/normal force characteristics above were derived using 30 microinch gold plated contact and polished steel gauge pins having a bullet-shaped tip.

The curves represent typical average values; they are best used to compare the differences between similar size contacts and to guide you in selecting one that is suitable for your application. Your results may vary, so for your specification, we encourage you to obtain complimentary samples for your evaluation.

# CONTACT DATA

## Insertion / Extraction Force Graphs

## #43 CONTACT

FOR .015-.026 DIAMETER PINS (δ=.008)
6-FINGER, GROUP C (see page 214)

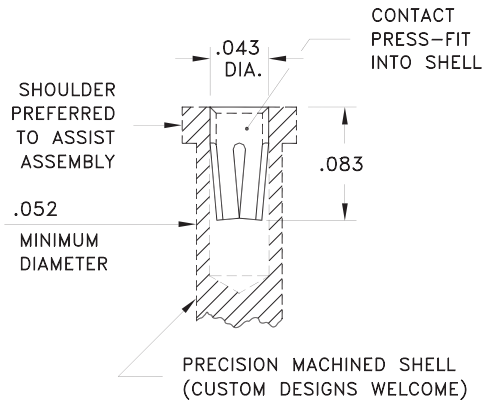


**CONTACT MATERIAL:**
BERYLLIUM COPPER Alloy 172, Heat Treated

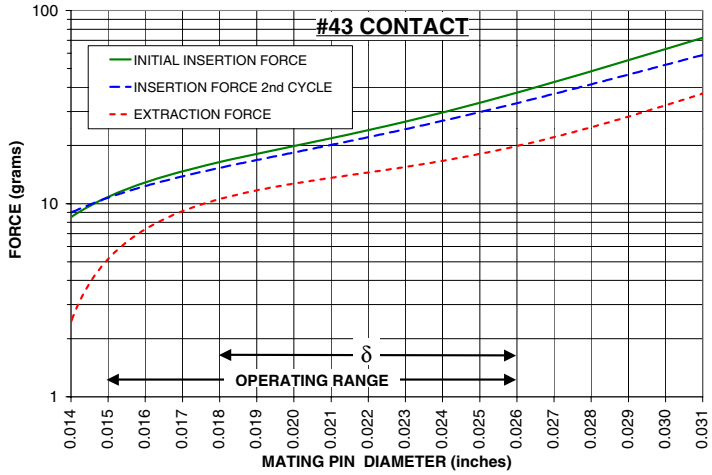


The insertion/extraction/normal force characteristics above were derived using 30 microinch gold plated contact and polished steel gauge pins having a bullet-shaped tip.

The curves represent typical average values; they are best used to compare the differences between similar size contacts and to guide you in selecting one that is suitable for your application. Your results may vary, so for your specification, we encourage you to obtain complimentary samples for your evaluation.

## #15 CONTACT

FOR .022-.032 DIAMETER PINS (δ=.004)
6-FINGER (see page 214)

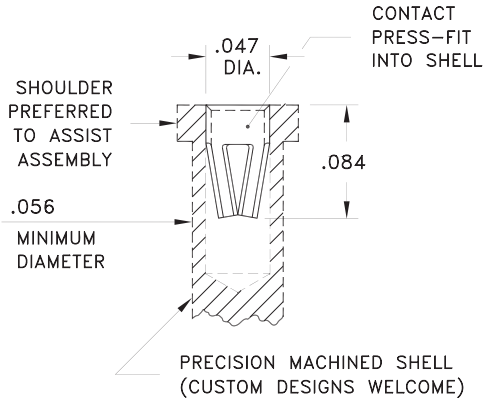


**CONTACT MATERIAL:**
BERYLLIUM COPPER Alloy 172, Heat Treated

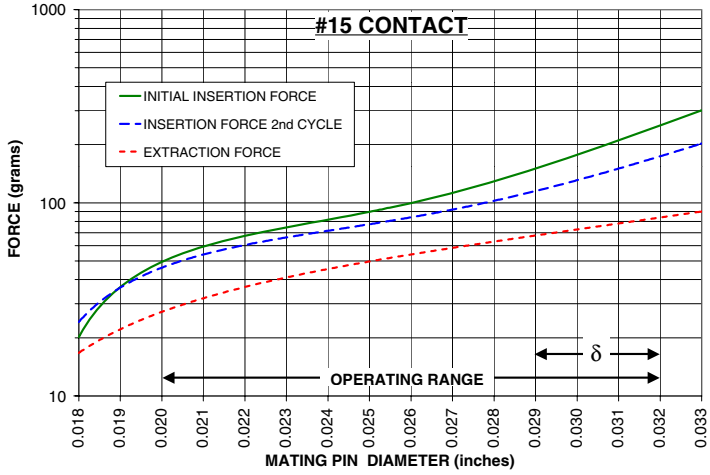


The insertion/extraction/normal force characteristics above were derived using 30 microinch gold plated contact and polished steel gauge pins having a bullet-shaped tip.

The curves represent typical average values; they are best used to compare the differences between similar size contacts and to guide you in selecting one that is suitable for your application. Your results may vary, so for your specification, we encourage you to obtain complimentary samples for your evaluation.

## #06 CONTACT

FOR .022-.032 DIAMETER PINS (δ=.007)
4-FINGER, GROUP D (see page 214)

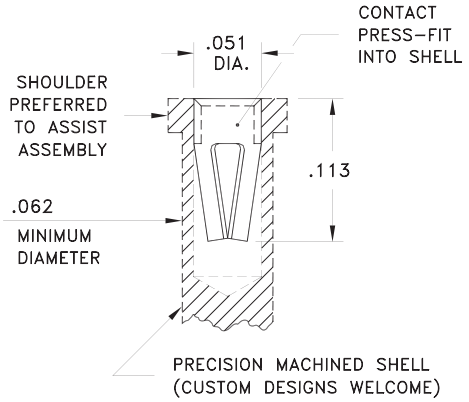


**CONTACT MATERIAL:**
BERYLLIUM COPPER Alloy 172, Heat Treated

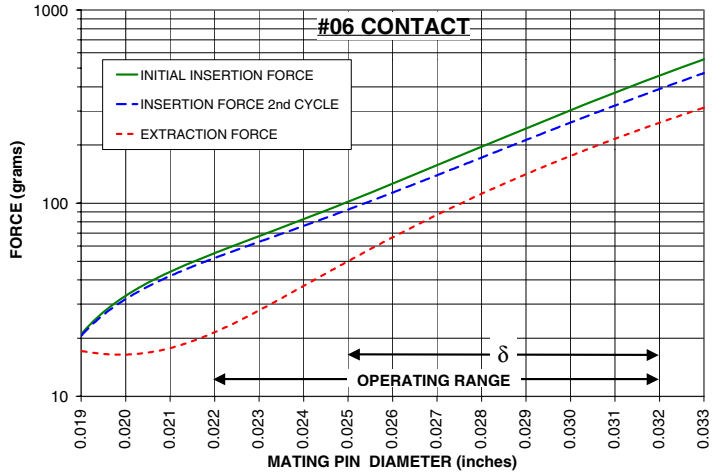


The insertion/extraction/normal force characteristics above were derived using 30 microinch gold plated contact and polished steel gauge pins having a bullet-shaped tip.

The curves represent typical average values; they are best used to compare the differences between similar size contacts and to guide you in selecting one that is suitable for your application. Your results may vary, so for your specification, we encourage you to obtain complimentary samples for your evaluation.

# CONTACT DATA

## Insertion / Extraction Force Graphs

## #26 CONTACT

FOR .022-.032 DIAMETER PINS (δ=.005)
4-FINGER, GROUP D (see page 214)

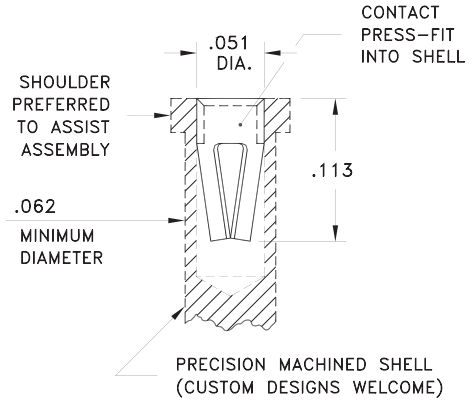


**CONTACT MATERIAL:**
BERYLLIUM NICKEL Alloy 360, Heat Treated

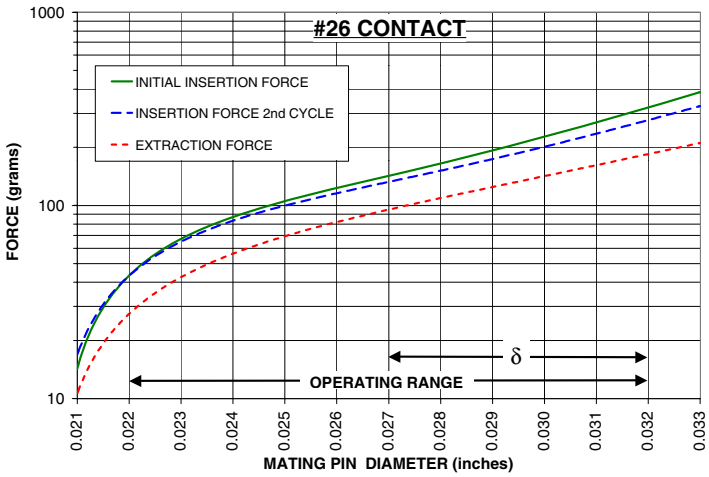


The insertion/extraction/normal force characteristics above were derived using 30 microinch gold plated contact and polished steel gauge pins having a bullet-shaped tip.

The curves represent typical average values; they are best used to compare the differences between similar size contacts and to guide you in selecting one that is suitable for your application. Your results may vary, so for your specification, we encourage you to obtain complimentary samples for your evaluation.

## #16 CONTACT

FOR .022-.034 DIA. & .025 SQ. (δ=.006)
6-FINGER, GROUP D (see page 214)

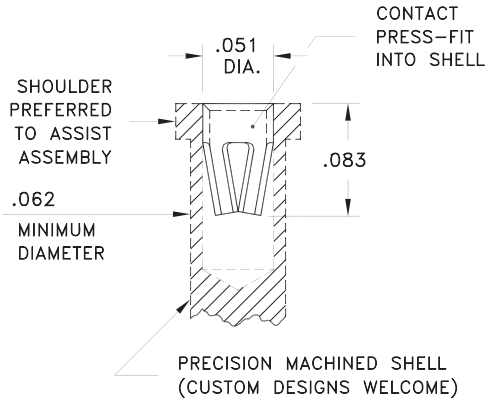


**CONTACT MATERIAL:**
BERYLLIUM COPPER Alloy 172, Heat Treated

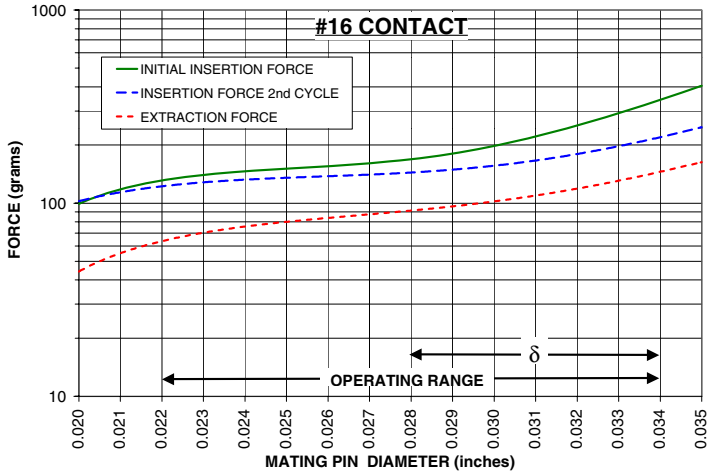


The insertion/extraction/normal force characteristics above were derived using 30 microinch gold plated contact and polished steel gauge pins having a bullet-shaped tip.

The curves represent typical average values; they are best used to compare the differences between similar size contacts and to guide you in selecting one that is suitable for your application. Your results may vary, so for your specification, we encourage you to obtain complimentary samples for your evaluation.

## #47 CONTACT

FOR .025-.037 DIA. & .025 SQ. (δ=.011)
6-FINGER, GROUP D (see page 214)

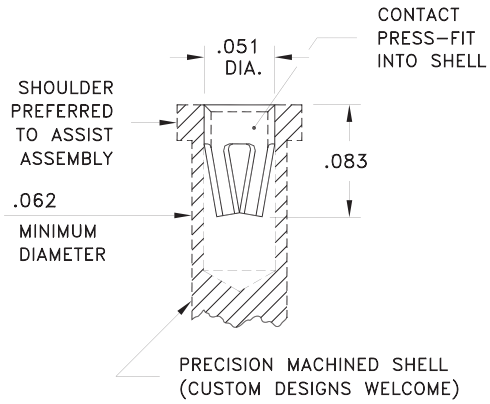


**CONTACT MATERIAL:**
BERYLLIUM COPPER Alloy 172, Heat Treated

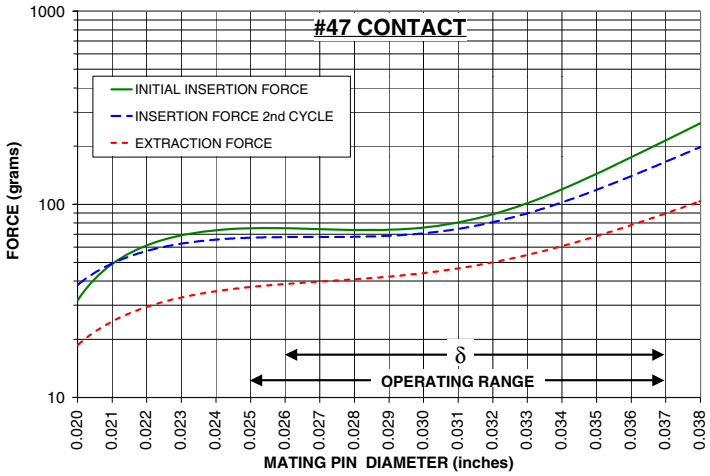


The insertion/extraction/normal force characteristics above were derived using 30 microinch gold plated contact and polished steel gauge pins having a bullet-shaped tip.

The curves represent typical average values; they are best used to compare the differences between similar size contacts and to guide you in selecting one that is suitable for your application. Your results may vary, so for your specification, we encourage you to obtain complimentary samples for your evaluation.

# CONTACT DATA

## Insertion / Extraction Force Graphs

## #18 CONTACT

FOR .037-.043 DIAMETER PINS (δ=.004)
6-FINGER (see page 214)

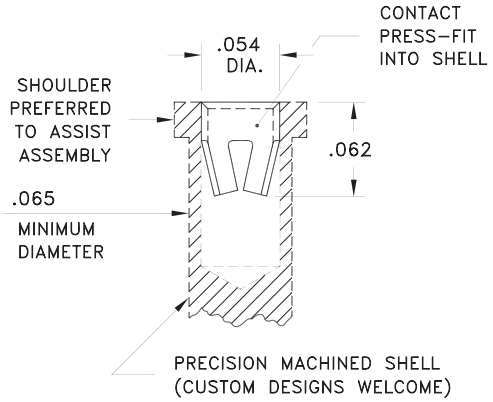


**CONTACT MATERIAL:**
BERYLLIUM COPPER Alloy 172, Heat Treated

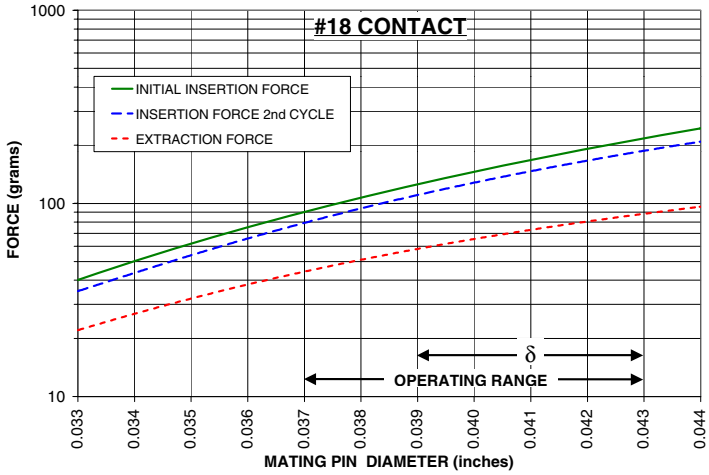


The insertion/extraction/normal force characteristics above were derived using 30 microinch gold plated contact and polished steel gauge pins having a bullet-shaped tip.

The curves represent typical average values; they are best used to compare the differences between similar size contacts and to guide you in selecting one that is suitable for your application. Your results may vary, so for your specification, we encourage you to obtain complimentary samples for your evaluation.

## #36 CONTACT

FOR .022-.042 DIAMETER PINS (δ=.022)
4-FINGER, GROUP E (see page 214)

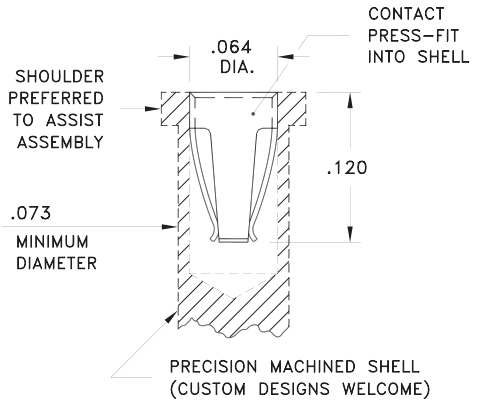


**CONTACT MATERIAL:**
BERYLLIUM COPPER Alloy 172, Heat Treated

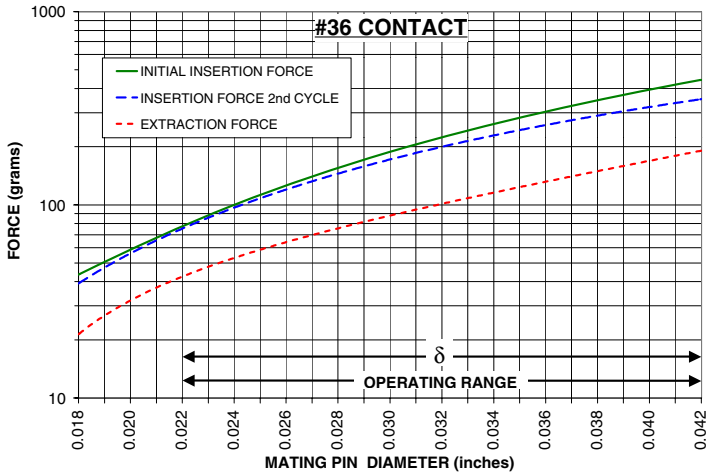


The insertion/extraction/normal force characteristics above were derived using 30 microinch gold plated contact and polished steel gauge pins having a bullet-shaped tip.

The curves represent typical average values; they are best used to compare the differences between similar size contacts and to guide you in selecting one that is suitable for your application. Your results may vary, so for your specification, we encourage you to obtain complimentary samples for your evaluation.

## #34 CONTACT

FOR .032-.046 DIAMETER PINS (δ=.010)
4-FINGER, GROUP E (see page 214)

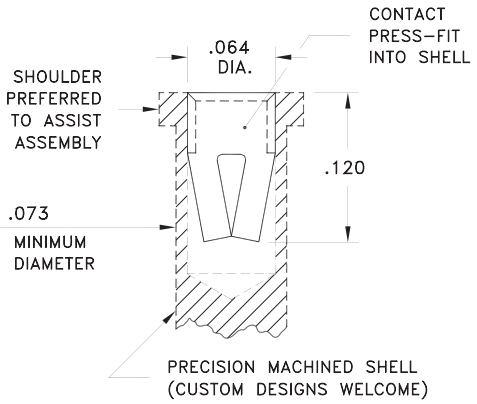


**CONTACT MATERIAL:**
BERYLLIUM COPPER Alloy 172, Heat Treated

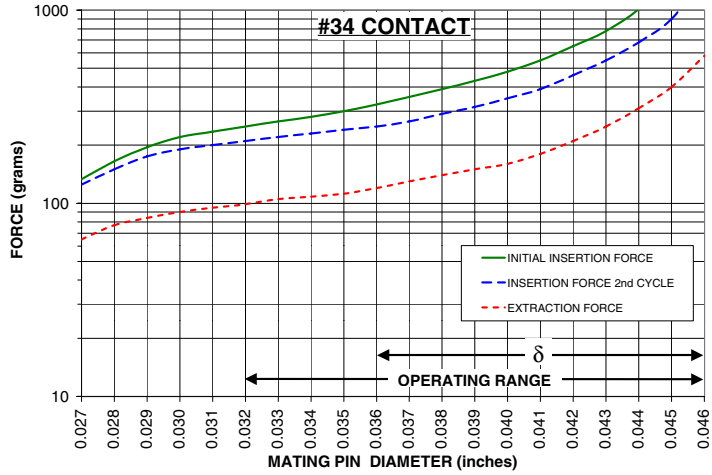


The insertion/extraction/normal force characteristics above were derived using 30 microinch gold plated contact and polished steel gauge pins having a bullet-shaped tip.

The curves represent typical average values; they are best used to compare the differences between similar size contacts and to guide you in selecting one that is suitable for your application. Your results may vary, so for your specification, we encourage you to obtain complimentary samples for your evaluation.

# CONTACT DATA

## Insertion / Extraction Force Graphs

## #49 CONTACT

FOR .032-.046 DIAMETER PINS (δ=.006)
4-FINGER, GROUP E (see page 214)

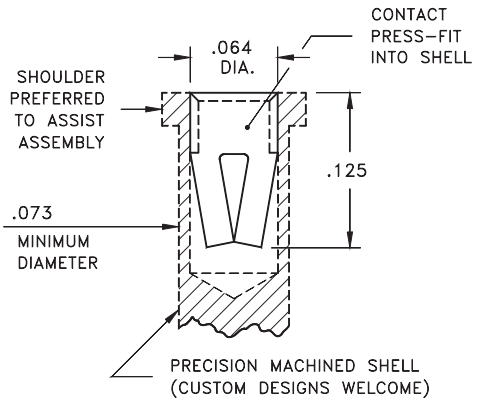


**CONTACT MATERIAL:**
BERYLLIUM COPPER Alloy 172, Heat Treated

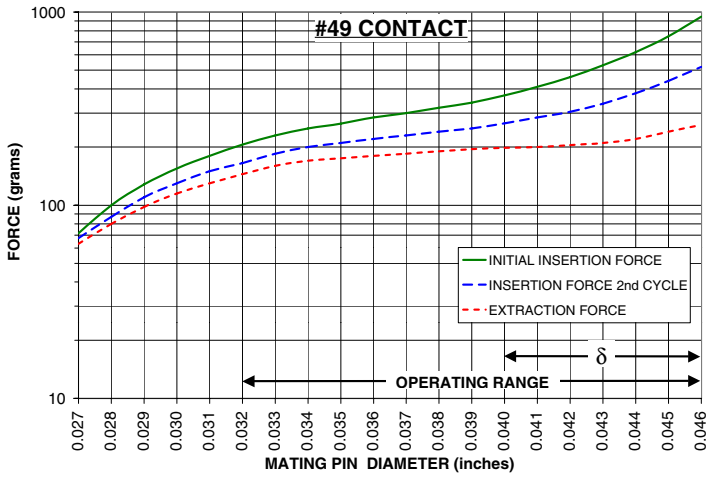


The insertion/extraction/normal force characteristics above were derived using 30 microinch gold plated contact and polished steel gauge pins having a bullet-shaped tip.

The curves represent typical average values; they are best used to compare the differences between similar size contacts and to guide you in selecting one that is suitable for your application. Your results may vary, so for your specification, we encourage you to obtain complimentary samples for your evaluation.

## #24 CONTACT

FOR .032-.046 DIAMETER PINS (δ=.009)
4-FINGER, GROUP E (see page 214)

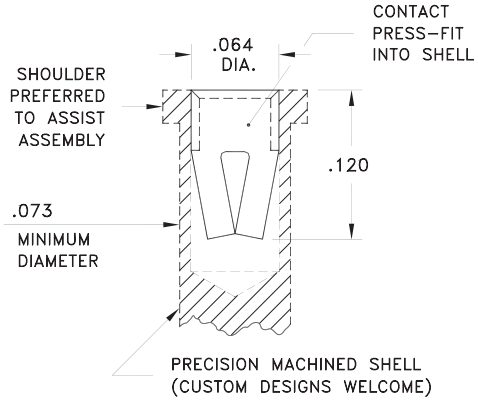


**CONTACT MATERIAL:**
BERYLLIUM NICKEL Alloy 360, Heat Treated

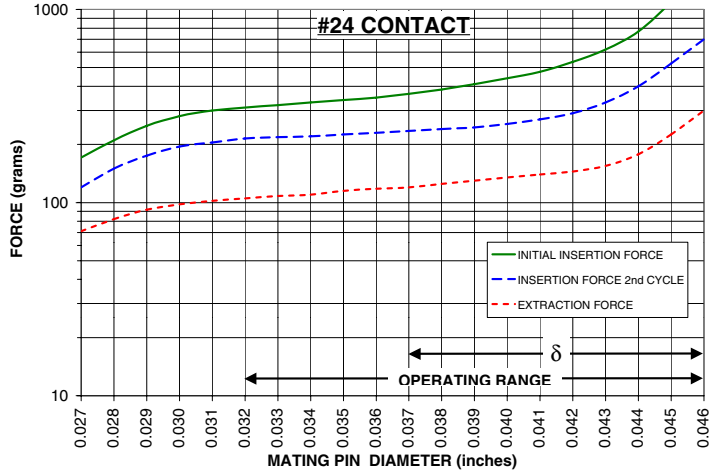


The insertion/extraction/normal force characteristics above were derived using 30 microinch gold plated contact and polished steel gauge pins having a bullet-shaped tip.

The curves represent typical average values; they are best used to compare the differences between similar size contacts and to guide you in selecting one that is suitable for your application. Your results may vary, so for your specification, we encourage you to obtain complimentary samples for your evaluation.

## #02 CONTACT

FOR .040-.050 DIAMETER PINS (δ=.006)
6-FINGER, GROUP F (see page 214)

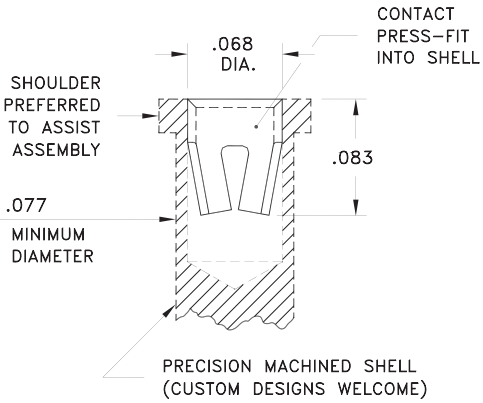


**CONTACT MATERIAL:**
BERYLLIUM COPPER Alloy 172, Heat Treated

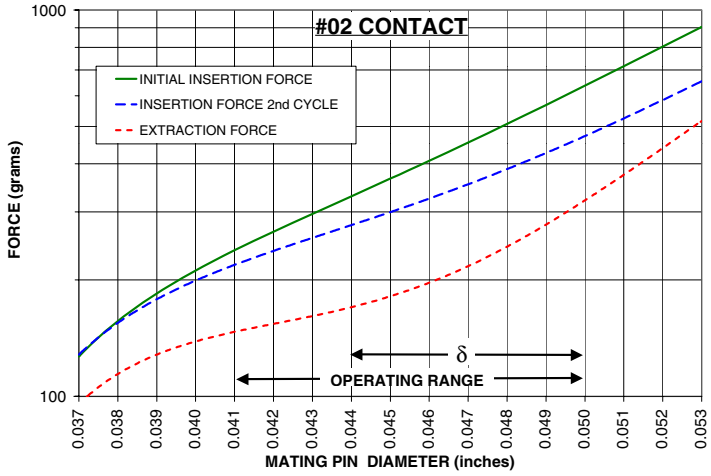


The insertion/extraction/normal force characteristics above were derived using 30 microinch gold plated contact and polished steel gauge pins having a bullet-shaped tip.

The curves represent typical average values; they are best used to compare the differences between similar size contacts and to guide you in selecting one that is suitable for your application. Your results may vary, so for your specification, we encourage you to obtain complimentary samples for your evaluation.

# CONTACT DATA

## Insertion / Extraction Force Graphs

## #28 CONTACT

FOR .042-.052 DIAMETER PINS (δ=.005)
6-FINGER, GROUP F (see page 214)

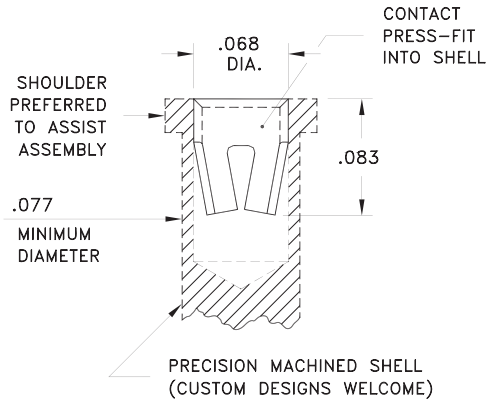


**CONTACT MATERIAL:**
BERYLLIUM COPPER Alloy 172, Heat Treated

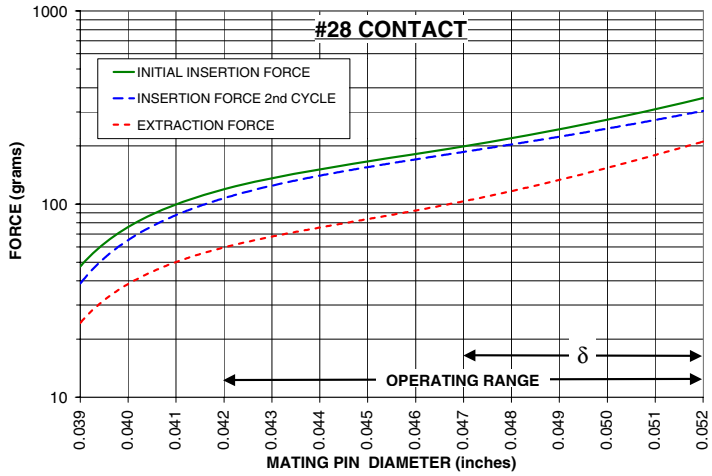


The insertion/extraction/normal force characteristics above were derived using 30 microinch gold plated contact and polished steel gauge pins having a bullet-shaped tip.

The curves represent typical average values; they are best used to compare the differences between similar size contacts and to guide you in selecting one that is suitable for your application. Your results may vary, so for your specification, we encourage you to obtain complimentary samples for your evaluation.

## #03 CONTACT

FOR .040-.060 DIAMETER PINS (δ=.010)
4-FINGER (see page 214)

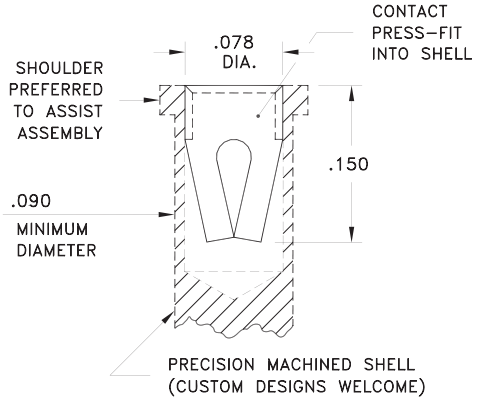


**CONTACT MATERIAL:**
BERYLLIUM COPPER Alloy 172, Heat Treated

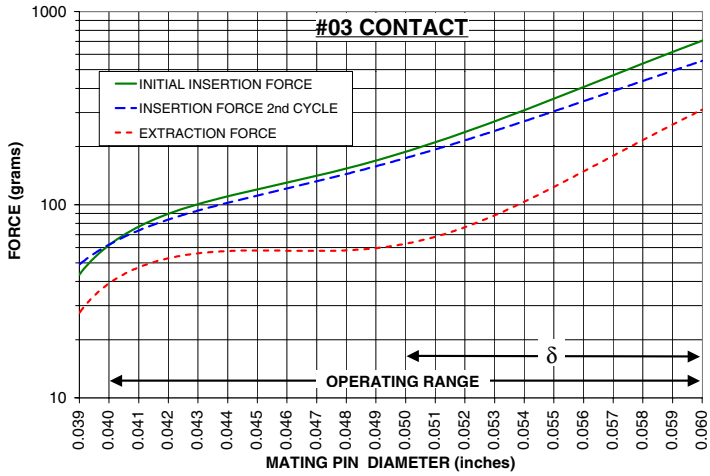


The insertion/extraction/normal force characteristics above were derived using 30 microinch gold plated contact and polished steel gauge pins having a bullet-shaped tip.

The curves represent typical average values; they are best used to compare the differences between similar size contacts and to guide you in selecting one that is suitable for your application. Your results may vary, so for your specification, we encourage you to obtain complimentary samples for your evaluation.

## #23 CONTACT

FOR .045-.065 DIAMETER PINS (δ=.008)
6-FINGER, GROUP G (see page 214)

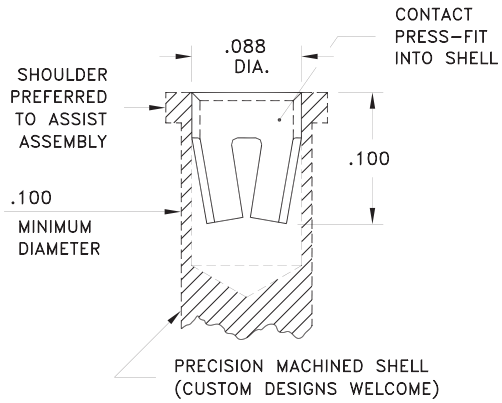


**CONTACT MATERIAL:**
BERYLLIUM COPPER Alloy 172, Heat Treated

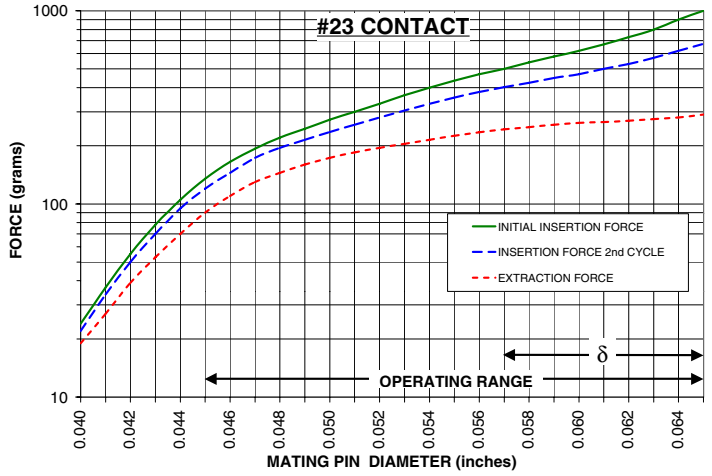


The insertion/extraction/normal force characteristics above were derived using 30 microinch gold plated contact and polished steel gauge pins having a bullet-shaped tip.

The curves represent typical average values; they are best used to compare the differences between similar size contacts and to guide you in selecting one that is suitable for your application. Your results may vary, so for your specification, we encourage you to obtain complimentary samples for your evaluation.

# CONTACT DATA

## Insertion / Extraction Force Graphs

## #13 CONTACT

FOR .048-.064 DIAMETER PINS (δ=.010)
4-FINGER, GROUP G (see page 214)

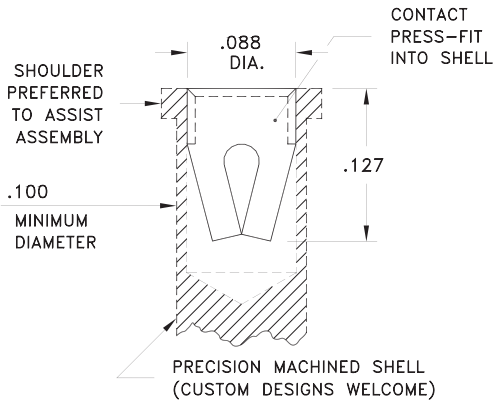


**CONTACT MATERIAL:**
BERYLLIUM COPPER Alloy 172, Heat Treated

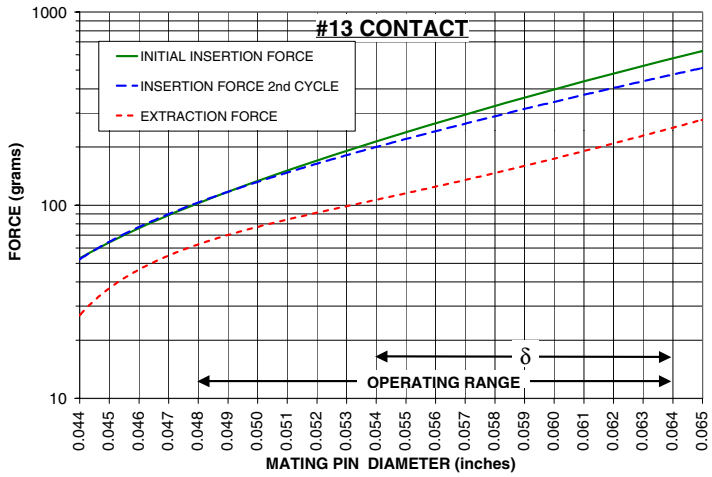


The insertion/extraction/normal force characteristics above were derived using 30 microinch gold plated contact and polished steel gauge pins having a bullet-shaped tip.

The curves represent typical average values; they are best used to compare the differences between similar size contacts and to guide you in selecting one that is suitable for your application. Your results may vary, so for your specification, we encourage you to obtain complimentary samples for your evaluation.

## #33 CONTACT

FOR .048-.064 DIAMETER PINS (δ=.008)
4-FINGER, GROUP G (see page 214)

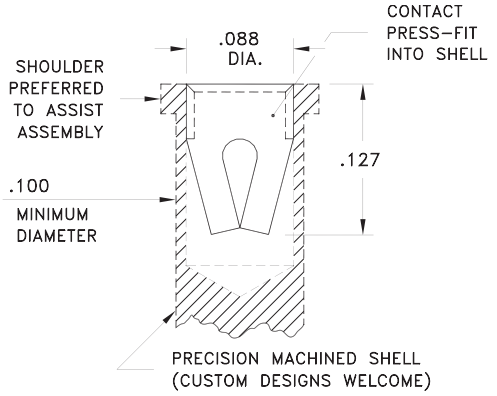


**CONTACT MATERIAL:**
BERYLLIUM NICKEL Alloy 360, Heat Treated

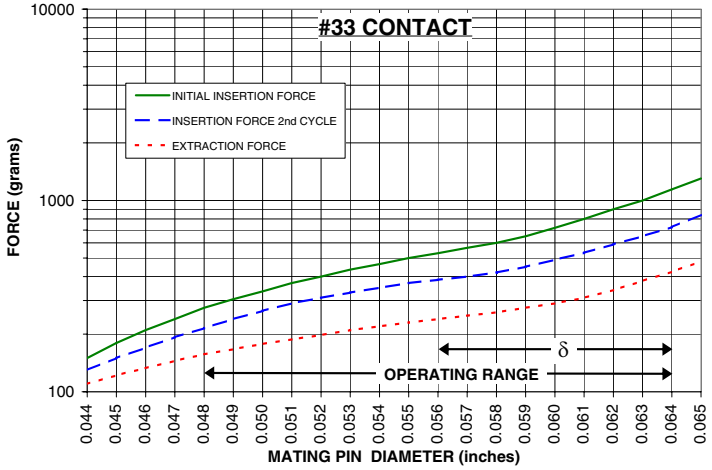


The insertion/extraction/normal force characteristics above were derived using 30 microinch gold plated contact and polished steel gauge pins having a bullet-shaped tip.

The curves represent typical average values; they are best used to compare the differences between similar size contacts and to guide you in selecting one that is suitable for your application. Your results may vary, so for your specification, we encourage you to obtain complimentary samples for your evaluation.

## #07 CONTACT

FOR .065-.082 DIAMETER PINS (δ=.013)
4-FINGER, GROUP H (see page 214)

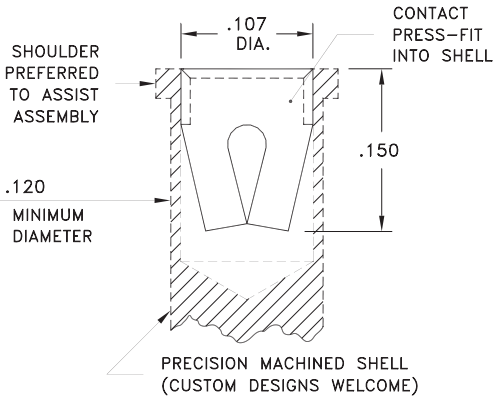


**CONTACT MATERIAL:**
BERYLLIUM COPPER Alloy 172, Heat Treated

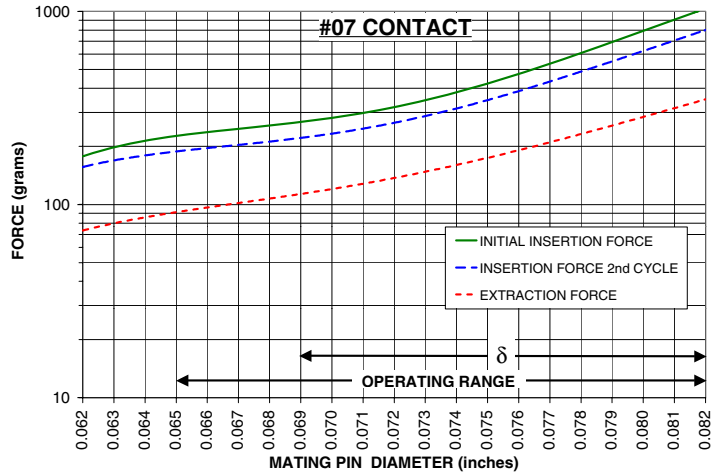


The insertion/extraction/normal force characteristics above were derived using 30 microinch gold plated contact and polished steel gauge pins having a bullet-shaped tip.

The curves represent typical average values; they are best used to compare the differences between similar size contacts and to guide you in selecting one that is suitable for your application. Your results may vary, so for your specification, we encourage you to obtain complimentary samples for your evaluation.

## #27 CONTACT

FOR .065-.082 DIAMETER PINS (δ=.012)
4-FINGER, GROUP H (see page 214)

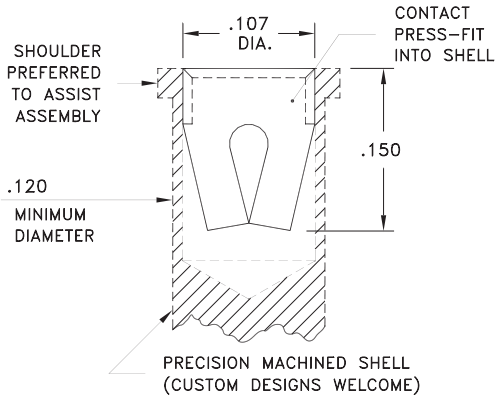


**CONTACT MATERIAL:**
BERYLLIUM NICKEL Alloy 360, Heat Treated

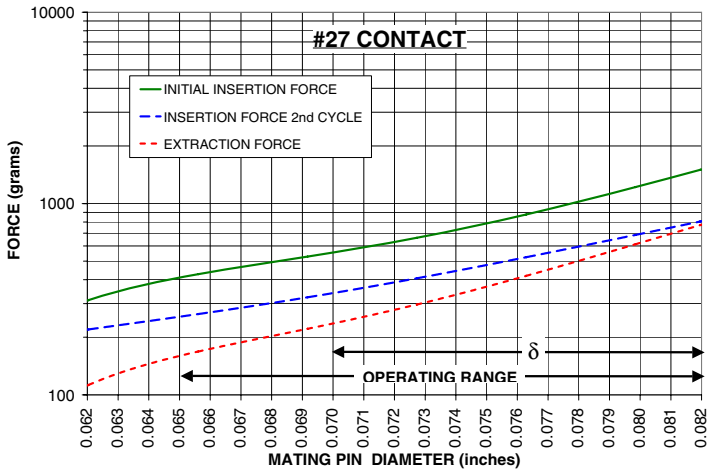


The insertion/extraction/normal force characteristics above were derived using 30 microinch gold plated contact and polished steel gauge pins having a bullet-shaped tip.

The curves represent typical average values; they are best used to compare the differences between similar size contacts and to guide you in selecting one that is suitable for your application. Your results may vary, so for your specification, we encourage you to obtain complimentary samples for your evaluation.

## #14 CONTACT

FOR .065-.082 DIAMETER PINS (δ=.014)
4-FINGER, GROUP H (see page 214)

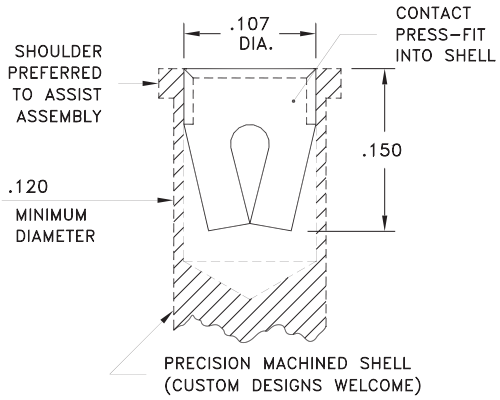


**CONTACT MATERIAL:**
BERYLLIUM COPPER Alloy 172, Heat Treated

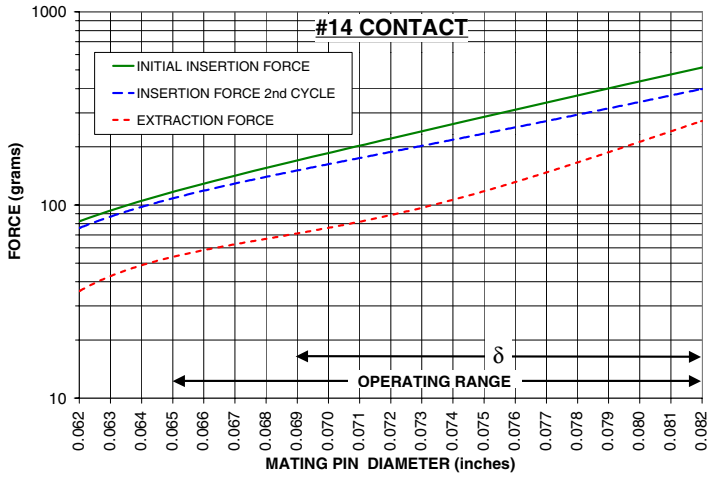


The insertion/extraction/normal force characteristics above were derived using 30 microinch gold plated contact and polished steel gauge pins having a bullet-shaped tip.

The curves represent typical average values; they are best used to compare the differences between similar size contacts and to guide you in selecting one that is suitable for your application. Your results may vary, so for your specification, we encourage you to obtain complimentary samples for your evaluation.

## #08 CONTACT

FOR .084-.102 DIAMETER PINS (δ=.011)
6-FINGER (see page 214)

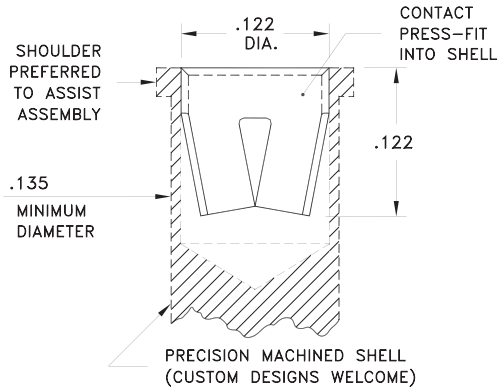


**CONTACT MATERIAL:**
BERYLLIUM COPPER Alloy 172, Heat Treated

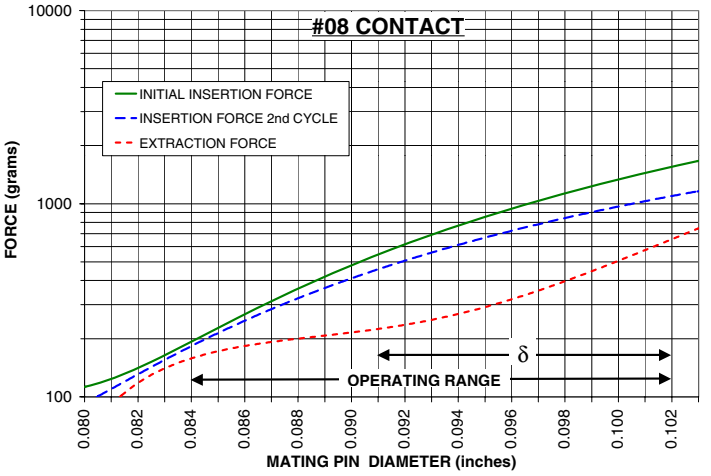


The insertion/extraction/normal force characteristics above were derived using 30 microinch gold plated contact and polished steel gauge pins having a bullet-shaped tip.

The curves represent typical average values; they are best used to compare the differences between similar size contacts and to guide you in selecting one that is suitable for your application. Your results may vary, so for your specification, we encourage you to obtain complimentary samples for your evaluation.

# DETAILED PROPERTIES OF MILL-MAX RAW MATERIALS
## (including RoHS 2002/95/EC requirements)

### PROPERTIES OF METALS USED BY MILL-MAX

Copper alloy rod and wire for precision-machined pins, receptacles & solder terminals **(Alloys C36000 & C54400 contain 3 to 4% lead to permit "free machining" and is permitted by EC Directive 2002/95 Annex 6; so all pin materials are RoHS compliant).**

**BRASS** ALLOY 360 (UNS C36000) per ASTM B 16
**PHOSPHOR BRONZE** Alloy 544 (UNS C54400) per ASTM B 139
**TELLURIUM COPPER** Alloy 145 (UNS C14500) per ASTM B 301

Spring alloy strip for stamping "multi-finger" spring contacts
**BERYLLIUM COPPER** Alloy 172 (UNS C17200) per ASTM B 194
**BERYLLIUM NICKEL** Alloy 360 (UNS N03360)

**Properties of BRASS:**
Stock diameters available: .062/.072/.078/.093/.125/.156/.187/.250"
Chemical composition: Cu 61.5%, Zn 35.4%, Pb 3.1%
Temper as machined: H02/H04
Modulus of elasticity: $14x10^6$ psi
Tensile strength: $70\text{-}90x10^3$ psi
Hardness as machined: 80-90 Rockwell B
After machining, brass parts are often annealed (softened) for subsequent bending, swaging or crimping. A partial anneal down to 60±10 RB is recommended for 90° bends, a full anneal down to 35±15 RB is recommended for pins or terminals that are swaged (riveted) to a circuit board or crimped to a wire.
Density: .307 lbs/in3
Electrical conductivity: 26% IACS*
Melting point: 900°C/885°C (liquidus/solidus)

**Properties of PHOSPHOR BRONZE:**
Used for pins requiring more durability than brass.
Stock diameters available: .072/.078"
Chemical composition: Cu 88%, Sn 4%, Zn 4%, Pb 4%
Temper as machined: H04
Modulus of elasticity: $15x10^6$ psi
Tensile strength: $70\text{-}80x10^3$ psi
Hardness as machined: 83 Rockwell B
Density: .321 lbs/in3
Electrical conductivity: 19% IACS*
Melting point: 1000°C/930°C (liquidus/solidus)

**Properties of TELLURIUM COPPER:**
Used for pins requiring a higher current carrying capacity than brass or phosphor bronze.
Stock diameters available: .079/.093/.125/.156"
Chemical composition: Cu 99.44%, Te .55%, P .008%
Temper as machined: H02
Modulus of elasticity: $17x10^6$ psi
Tensile strength: $43x10^3$ psi
Hardness as machined: 43 Rockwell B
Density: .323 lbs/in3
Electrical conductivity: 93% IACS*
Thermal conductivity: 91% IACS*
Melting point: 1075ºC/1051ºC (liquidus/solidus)

**Properties of BERYLLIUM COPPER:**
Chemical composition: Cu 98.1%, Be 1.9%
Temper as stamped: TD01
Properties after heat treatment (TH01):
Modulus of Elasticity: $19x10^6$ psi
Tensile Strength: $175\text{-}205x10^3$ psi
Yield Strength (0.2% offset): $150\text{-}185x10^3$ psi
Elongation: 3-10%
Stress Relaxation†: 96% of stress remains after 1,000 hours @ 100 ºC
70% of stress remains after 1,000 hours @ 200 ºC
Hardness: 36-43 Rockwell C
Density: .298 lbs/in3
Electrical Conductivity: 22% IACS*
Melting point: 980°C/865°C (liquidus/solidus)

†Since BeCu loses its spring properties over time at high temperatures; it is rated for continuous use up to 150°C. For "down-hole" and "burn-in" applications up to 300°C, Mill-Max offers four contacts (#24, #26, #27 & #38) made from Beryllium Nickel Alloy 360 (UNS N03360)

**Properties of BERYLLIUM NICKEL:**
Chemical composition: Ni 97.6%, Be 1.9%, Ti 0.5%
Modulus of Elasticity: $27\text{-}30x10^6$ psi
Tensile Strength: $245x10^3$ psi min.
Yield Strength (0.2% offset): $200x10^3$ psi min.
Elongation: 9% min.
Hardness: 49 Rockwell C
Density: .294 lbs/in3
Electrical Conductivity: 7% IACS*
Melting point: 1,325°C/1,195°C (liquidus/solidus)

*International Annealed Copper Standard, i.e.: as a % of pure copper.

### PROPERTIES OF PLASTICS USED BY MILL-MAX

Standard plastics used for catalog products:

**Injection Molded**

**PCT** Polyester, High Temp (Thermx CG933, black)
**Nylon46**, High Temp (Stanyl TE250F6 {30% glass} or TE250F9 {45% glass}, black)
**PPS**, High Temp (Ryton R-4-200)

**Machined**

**FR-4** Epoxy/Glass Laminate. Thicknesses available: .010", .020", .031", .047", .062", .093", .125" (natural color, beige)
**FR-4** Epoxy/Glass Laminate, .055" thick (black)
**G-30** Polyimide/Glass Laminate, .062" thick (natural color, brown)

### TEMPERATURE COMPARISON OF MOLDED INSULATORS

| MATERIAL | BRAND | GRADE | HEAT DEFLECTION TEMP. (per ASTM D 648) |
|---|---|---|---|
| **PCT** Polyester | Thermx | CG-933 | 529°F (276°C) @ 66 psi |
| **Nylon 46** | Stanyl | TE250-F6 or F9 | 554°F (290°C) @ 264 psi |
| **PPS** | Ryton | R-4-200 | >500ºF (>260ºC) @ 264 psi |

Note: Materials above 446°F (230°C) are considered suitable for "eutectic" reflow soldering, above 500°F (260°C) for "lead-free" reflow soldering.
**PCT is the standard plastic used with RoHS "lead-free" plated pins.**

### MILL-MAX STANDARD PLATINGS (FINISHES):

**GOLD** per ASTM B 488, Type 1 (99.7% min. gold),
Code C (130-200 HK {Knoop hardness}),
Class (thickness) per customer's requirements

**SILVER** per ASTM B 700, Type 1 (99.9% min. silver),
Grade B (Bright),
Class S (anti-tarnish treatment),
Thickness (7.5µm/300µ" used for solder terminals)

**TIN/LEAD** (93/7) per ASTM B 545 (Appendix X6.3.2.5 to eliminate whisker growth) Class A (2.5µm/100µ")
or Class B (5µm/200µ"),
Bright finish (Matte available to order)

**ELECTRO-SOLDER** (60/40) per ASTM B 579, SC2 (8µm/300µ"),
Bright finish (Matte available to order)

**Standard finishes available for RoHS "lead-free" applications:**

**GOLD** per ASTM B 488, Type 1 (99.7% min. gold),
Code C (130-200 HK {Knoop hardness}),
Class (thickness) per customer's requirements

**TIN** (100%) per ASTM B 545, Class A (2.5µm/100µ")
or Class B (5µm/200µ"),
Matte finish (With whisker and oxide inhibitors and a nickel underplate)

**ALL MILL-MAX PARTS REQUIRE AN UNDERPLATE:**

Brass parts need a barrier plate to prevent zinc diffusion, 50µ" min. nickel or 100µ" min. copper is recommended by ASTM B 545 & 579. ASTM B 488 also recommends a 50µ" min. nickel barrier plate beneath gold to prevent copper diffusion inherent with all copper alloy products.

**MILL-MAX STANDARD UNDERPLATES:**

**NICKEL** per ASTM B 689, Type 2 (Bright),
Class 1.25 (1.25µm/50µ") or Class 2.5 (2.5µm/100µ")

Also available for military & "non-magnetic" applications:

**COPPER** per ASTM B 734, Class 2.5 (2.5µm/100µ")
or Class 5 (5µm/200µ")

**Annealing** - Refers to a brass pin that has been softened by heat treatment which makes the pin easier to crimp, rivet (swage) or bend.

**Carrier** - An assembly consisting of an insulator with male pins onto which receptacles are loaded. This assembly is employed as a fixture during the soldering operation and is then removed leaving a PC board populated with individual receptacles. Female carriers that load male pins are also available for special applications.

**Clip** - See Contact.

**Closed Entry** - Refers to female contacts where the front rim prevents the insertion of an oversize pin that would otherwise damage the contact.

**Compliancy** - Contact's ability to accept multiple insertions and extractions of a wide range of pin shapes and sizes while retaining its original configuration.

**Compliant Press Fit** - Method of mounting an interconnect component to a PC board where a drilled and slotted receptacle or pin is pressed into a plated-through-hole without damaging the hole.

**Constant Usage Temperature (CUT)** - Constant Usage Temperature is a measure of the maximum temperature that a material may be exposed to for long periods of time, 1000 - 1500 hrs., before degradation of its electrical and mechanical properties occurs.

**Contact (and Contact Clip)** - Multi-finger spring insert of a receptacle which completes the electrical path between a male pin and a female receptacle. Also referred to as a clip.

**Contact Rating** - Current carrying capability of a contact measured in amperes with respect to temperature rise above ambient.

**Contact Resistance** - The electrical resistance at the point of connection determined by the contact geometry, area of contact, plating and normal force.

**Coplanarity** – Refers to the measurement of multiple points and their distance from a respective plane. This is particularly useful for surface mount parts to determine the maximum amount of difference in the height of the surfaces that need to be soldered.

**Electroplating** - The electrodepositing of a metal coating on a conductive object such as a pin, shell, or contact clip.

**Electro-vibratory Plating** - An electroplating system where the parts are processed in a vibrating basket which ensures uniform plating thickness and avoids damage to delicate parts.

**End Stackable** - The ability for connectors to be mounted end to end while maintaining grid or spacing.

**Extraction Force (or Withdrawal Force)** - The force required to remove a lead from a contact.

**Epoxy** - Woven glass cloth epoxy laminate. Classified as a thermoset, the woven fibers of these materials enable them to withstand high temperatures without being damaged. Cut from large sheets of material, the insulator is then machined on a high speed drill/router, the same way as printed circuit boards are fabricated.

**Electrostatic Discharge (ESD)** - The momentary electric current that flows between two objects that may cause damage to electronic equipment.

**Flash (Plating)** - A very thin plating, usually less than 10 micro inches, only enough metal to uniformly cover the surface of the base metal.

**Flatness** – Sometimes used in place of coplanarity, flatness refers to the amount of variation of a plane or surface.

**Floating Contact** - In surface mount sockets, a receptacle designed to move up and down freely in an insulator to compensate for unevenly dispensed solder paste.

**Free Machining Alloy** - An alloy which is easy to machine, e.g. brass alloy 360.

**Fretting** - A form of corrosion caused by vibration.

**Gas Tight Connection** - An electrical connection of sufficient pressure to prevent the intrusion of a corrosive atmosphere into the contact area.

**Heat Deflection Temperature (HDT)** - An industry recognized test for comparing the short term effects of high temperature on plastics.

**Heat Treating -** The process of using specific heating and cooling cycles to alter the mechanical properties of an alloy. Generally, heat treating can harden or soften a metal depending on the material, the parameters used and the desired physical property.

**Hex Press Fit** - A method of press-fitting either a pin or receptacle, using a hexagonal cross section, into a plated through-hole without causing damage to the hole while still maintaining a gas tight seal.

**High Speed Turning** - See Precision-Machined.

**Injection Molding** - A method of molding plastics by first heating granular plastic to its molten state and injecting it into the mold cavity where the plastic solidifies and is then ejected from the cavity.

**Insertion Force** - The force required to insert a male lead into a female socket.

**Knurl** - A vertical serration machined around the diameter of an interconnect pin providing a retention feature for press-fitting in a PC board or insulator and also preventing rotation of the pin.

**LCP (Liquid Crystal Polymer)** - Classified as a thermoplastic, LCP is a hard, rigid material which exhibits outstanding strength at high temperatures and exceptional strength and toughness in its thin walls. Applications: LCP is used as an insulator material for tight grid (.050", 2mm) connectors and extremely high temperature requirements.

**Mating Pin** – The pin used to interconnect two electronic devices by inserting it into the contact. Critical features are diameter, length, and shape (but not limited to.)

**Machined** - See Precision-Machined.

**Migration** - For a brass part plated with tin or gold, the migration of zinc from brass to the surface of the plating. This becomes zinc oxide and renders the part unsolderable. Zinc migration is prevented by using a copper or nickel underplate as a barrier.

**Nylon 46** - Classified as thermoplastics. Nylon 46 offers superior heat resistance, good electrical properties and excellent toughness in its thin walls, which are desirable characteristics for connector insulators. Its superior strength in thin walls enables the press-fitting of pins in close proximity to each other without cracking or warping the material, making it ideal for molding 2mm and .050" grid insulators. Nylon 46 is suitable for high temperature applications including vapor phase, infra-red reflow and wave soldering operations.

**Passive Device or Component** – An electronic connector that consumes electrical energy, but does not produce electrical energy. Passive devices are not susceptible to significant ESD damage.

**PCB** - Printed Circuit Board.

**PCT (Polycyclohexane Terephthalate)** - Thermoplastic polyester is rated for higher temperatures. PCT is a standard material on DIP and SIP insulators for higher temperature operations. All PGA and surface mount products are molded from PCT and are suitable for infra-red, vapor phase and wave soldering.

**Plating** - A process in which metals (e.g. gold, tin-lead, nickel, silver) are electrically deposited onto a base metal in very thin and precise thicknesses.

**Plated Through-Hole** - A hole in a printed circuit board which has metallic walls connected to conductors on the surface or inside the board, in which the component lead is inserted and soldered.

**Precision-Machined** - Manufacturing process whereby a rapidly turning solid metal rod is cut to precise tolerances.

**Receptacle** - Female contact consisting of an outer shell and inner spring contact (clip) designed for multiple mating/unmating cycles with a male pin or component lead.

**Screw-Machined** - See Precision-Machined.

**Secondary Machining** - A process in which holes, slots, flats, squares or other special features may be machined onto a pin or receptacle after the basic shape of the part has been turned on a high speed lathe.

**Shrink DIP Package** - An IC which has a pin spacing of .070" on centers.

**Skiving** – The removal of a thin amount of plating when pins or contacts are press fit. For example, soft platings may yield some amount of skiving upon press fitting into an insulator or board. Skiving may also appear under a contact clip pressed into a receptacle shell.

**Standoff** - A protrusion at the bottom of the connector used to raise it off the PC board to aid in solder fillet formation, board inspection, flux removal and cleaning.

**Swage Mount** - A type of mounting commonly used with solder terminals and printed circuit pins where one end of the terminal is flared out (riveted) securing it to the PCB.

**Thermal Coefficient of Expansion (TCE)** - Expansion of material caused by an increase in temperature.

**Thermoset** - Type of plastic which is heat cured into a permanent shape, and due to chemical reaction, cannot be remelted.

**Thermoplastics** - Type of plastic which is molded under heat and pressure and can be remelted & reused many times.

**Top Plate** - Final surface plating over base metal and underplating.

**Underplate** - Plating between the base metal and the top plating.

**Withdrawal Force (or Extraction Force)** - The force required to remove a lead from a contact.

**Wrapost (Terminal or Receptacle)** - The length of square cross section of certain pins and receptacles which is used for making electrical connections via wire wrapping. Wire wrapping is a process in which wire is wrapped around the post to form a gas-tight connection without soldering.

# INDEX

## *NUMERICAL LISTING AND LOCATION OF MILL-MAX SOCKET ASSEMBLY NUMBERS WITH REFERENCE TO MILL-MAX PINS*

# INDEX

## NUMERICAL LISTING AND LOCATION OF MILL-MAX SOCKET ASSEMBLY NUMBERS WITH REFERENCE TO MILL-MAX PINS

# INDEX

## NUMERICAL LISTING AND LOCATION OF MILL-MAX SOCKET ASSEMBLY NUMBERS WITH REFERENCE TO MILL-MAX PINS

# INDEX

## *NUMERICAL LISTING AND LOCATION OF MILL-MAX SOCKET ASSEMBLY NUMBERS WITH REFERENCE TO MILL-MAX PINS*

# INDEX

## *NUMERICAL LISTING AND LOCATION OF MILL-MAX PINS*

# INDEX

## *NUMERICAL LISTING AND LOCATION OF MILL-MAX PINS*

# INDEX

## *NUMERICAL LISTING AND LOCATION OF MILL-MAX PINS*